User Manual
SKU: ABX00049

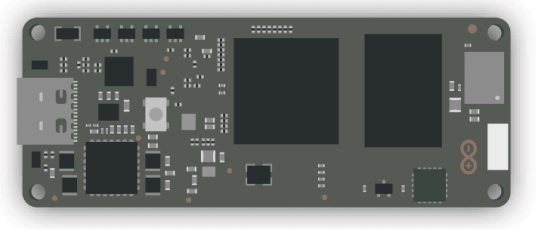

Description

The Arduino® Portenta X8 is a high-performance system on module designed to power the upcoming generation of the Industrial Internet of Things. This board combines the NXP® i.MX 8M Mini (4+1-cores) hosting an embedded Linux OS with the STM32H7 (2-cores) for real-time applications in the Arduino environment. Shield and carrier boards are available to extend the functionality of the Portenta X8 or alternatively can be used as reference designs to develop your own custom solutions.

Target Areas

Edge computing, industrial internet of things, system on module, artificial intelligence

Downloaded from Arrow.com.

Features

Component	Details	
NXP® i.MX 8M Mini Processor	4x Arm® Cortex®-A53 core platforms up to 1.8 GHz per core	32KB L1-I Cache 32 kB L1-D Cache 512 kB L2 Cache
	Arm® Cortex®-M4 core up to 400 MHz	16 kB L1-I Cache 16 kB L2-D Cache
	3D GPU (1x shader, OpenGL® ES 2.0)	
	2D GPU	
	1x MIPI DSI (4-lane) with PHY	
	1080p60 VP9 Profile 0, 2 (10-bit) decoder, HEVC/H.265 decoder, AVC/H.264 Baseline, Main, High decoder, VP8 decoder	
	1080p60 AVC/H.264 encoder, VP8 encoder	
	5x SAI (12Tx + 16Rx external I2S lanes), 8ch PDM input	
	1x MIPI CSI (4-lane) with PHY	
	2x USB 2.0 OTG controllers with integrated PHY	
	1x PCIe 2.0 (1-lane) with L1 low power substates	
	1x Gigabit Ethernet (MAC) with AVB and IEEE 1588, Energy Efficient Ethernet (EEE) for low power	
	4x UART (5mbps)	
	4x I2C	
	3x SPI	
	4x PWM	
STM32H747XI Microcontroller	Arm® Cortex®-M7 core at up to 480 MHz with double-precision FPU	16K data + 16K instruction L1 cache
	1x Arm® 32-bit Cortex®-M4 core at up to 240 MHz with FPU, Adaptive real-time accelerator (ART Accelerator™)	
	Memory	2 MB of Flash Memory with read-while-write support 1 MB of RAM

Downloaded from Arrow.com.

Component	Details	
Onboard memory	NT6AN512T32AV	2GB Low Power DDR4 DRAM
	FEMDRW016G	16GB Foresee® eMMC Flash module
USB-C®	High Speed USB	
	DisplayPort output	
	Host and Device operation	
	Power Delivery support	
High Density connectors	1 lane PCI express	
	1x 10/100/1000 Ethernet interface with PHY	
	2x USB HS	
	4x UART (2 with flow control)	
	3x I2C	
	1x SDCard interface	
	2x SPI (1 shared with UART)	
	1x I2S	
	1x PDM input	
	4 lane MIPI DSI output	
	4 lane MIPI CSI input	
	4x PWM outputs	
	7x GPIO	
	8x ADC inputs with separate VREF	
Murata® 1DX Wi-Fi®/Bluetooth® Module	Wi-Fi® 802.11b/g/n 65 Mbps	
	Bluetooth® 5.1 BR/EDR/LE	
NXP® SE050C2 Crypto	Common Criteria EAL 6+ certified up to OS level	
	RSA & ECC functionalities, high key length and future proof curves, such as brainpool, Edwards, and Montgomery	
	AES & 3DES encryption and decryption	
	HMAC, CMAC, SHA-1, SHA-224/256/384/512 operations	
	HKDF, MIFARE® KDF, PRF (TLS-PSK)	
	Support of main TPM functionalities	
	Secured flash user memory up to 50kB	
	I2C slave (High-speed mode, 3.4 Mbit/s), I2C master (Fast-mode, 400 kbit/s)	
	SCP03 (bus encryption and encrypted credential injection on applet and platform level)	

Downloaded from Arrow.com.

Component	Details	
ROHM BD71847AMWV Programmable PMIC	Dynamic voltage scaling	
	3.3V/2A voltage output to carrier board	
Temperature range	-40°C to +85°C	It is user's sole responsibility to test board's operation in full temperature range. To improve the board performance in critical conditions, it is possible to attach external heatsinks on the processor and on the memory chip.
Safety information	Class A	

Downloaded from Arrow.com.

Contents

1 The Board **7**
1.1 Application Examples 7
1.2 Accessories (Not Included) 7
1.3 Related Products 7
2 Rating **8**
2.1 Recommended Operating Conditions 8
2.2 Power Consumption 8
3 Functional Overview **9**
3.1 Block Diagram 9
4 Board Topology **10**
4.1 Front View 10
4.2 Back View 11
5 Processor **12**
5.1 NXP® i.MX 8M Mini Quad Core Microprocessor 12
5.2 STM32 Dual Core Microprocessor 12
6 Wi-Fi®/Bluetooth® Connectivity **12**
7 Onboard Memories **13**
8 Crypto Capabilities **13**
9 Gigabit Ethernet **13**
10 USB-C® Connector **14**
11 Real-Time Clock **15**
12 Power Tree **15**
13 Board Operation **16**
13.1 Getting Started - IDE 16
13.2 Getting Started - Arduino Cloud Editor 16
13.3 Getting Started - Arduino Cloud 16
13.4 Sample Sketches 16
13.5 Online Resources 16
13.6 Board Recovery 17
14 Mechanical Information **17**
14.1 Pinout 17
14.2 Mounting Holes and Board Outline 18
15 Certifications **19**

Downloaded from Arrow.com.

15.1 Declaration of Conformity CE DoC (EU) 19
15.2 Declaration of Conformity to EU RoHS & REACH 211 01/19/2021 19
15.3 Conflict Minerals Declaration 20
16 FCC Caution 20
17 Company Information 21
18 Reference Documentation 21
19 Change Log 22

Downloaded from Arrow.com.

1 The Board

1.1 Application Examples

The Arduino® Portenta X8 has been designed for high-performance embedded computing applications in mind, based on the quad-core NXP® i.MX 8M Mini Processor. The Portenta form factor enables the use of a wide range of shields to expand upon its functionality.

- **Embedded Linux:** Kickstart the deployment of Industry 4.0 with Linux Board Support Packages running on the feature packed and energy efficient Arduino® Portenta X8. Make use of the GNU toolchain to develop your solutions free from a technological lock-in.
- **High performance networking:** The Arduino® Portenta X8 includes Wi-Fi® and Bluetooth® connectivity to interact with a wide range of external devices and networks providing high flexibility. Additionally, the Gigabit Ethernet interface provides high speed and low latency for the most demanding of applications.
- **High speed modular embedded development:** The Arduino® Portenta X8 is a great unit for developing a wide range of custom solutions. The high-density connector provides access to many functions, including PCIe connectivity, CAN, SAI and MIPI. Alternatively, use the Arduino ecosystem of professionally designed boards as a reference for your own designs. Low-code software containers allow for rapid deployment.

1.2 Accessories (Not Included)

- USB-C® Hub
- USB-C® to HDMI Adapter
- Heatsink (if required)

1.3 Related Products

- Arduino® Portenta Breakout Board (ASX00031)
- Arduino® Portenta Max Carrier (ABX00043)
- Arduino® Portenta Hat Carrier (ASX00049)

Downloaded from Arrow.com.

2 Rating

2.1 Recommended Operating Conditions

Symbol	Description	Min	Typ	Max	Unit
V_{IN}	Input voltage from VIN pad	4.5	5	5.5	V
V_{USB}	Input voltage from USB connector	4.5	5	5.5	V
V_{3V3}	3.3 V output to user application		3.1		V
I_{3V3}	3.3 V output current available for user application	-	-	1000	mA
V_{IH}	Input high-level voltage	2.31	-	3.3	V
V_{IL}	Input low-level voltage	0	-	0.99	V
$I_{OH\ Max}$	Current at VDD-0.4 V, output set high			8	mA
$I_{OL\ Max}$	Current at VSS+0.4 V, output set low			8	mA
V_{OH}	Output high voltage, 8 mA	2.7	-	3.3	V
V_{OL}	Output low voltage, 8 mA	0	-	0.4	V

2.2 Power Consumption

Symbol	Description	Min	Typ	Max	Unit
P_{BL}	Power consumption with busy loop		2350		mW
P_{LP}	Power consumption in low power mode		200		mW
P_{MAX}	Maximum Power Consumption		4000		mW

The use of a USB 3.0 compatible port will ensure that the current requirements for the Portenta X8 are met. Dynamic scaling of the Portenta X8 compute units can change the current consumption, leading to current surges during boot-up. Average power consumption is provided in the above table for several reference scenarios.

Downloaded from Arrow.com.

3 Functional Overview

3.1 Block Diagram

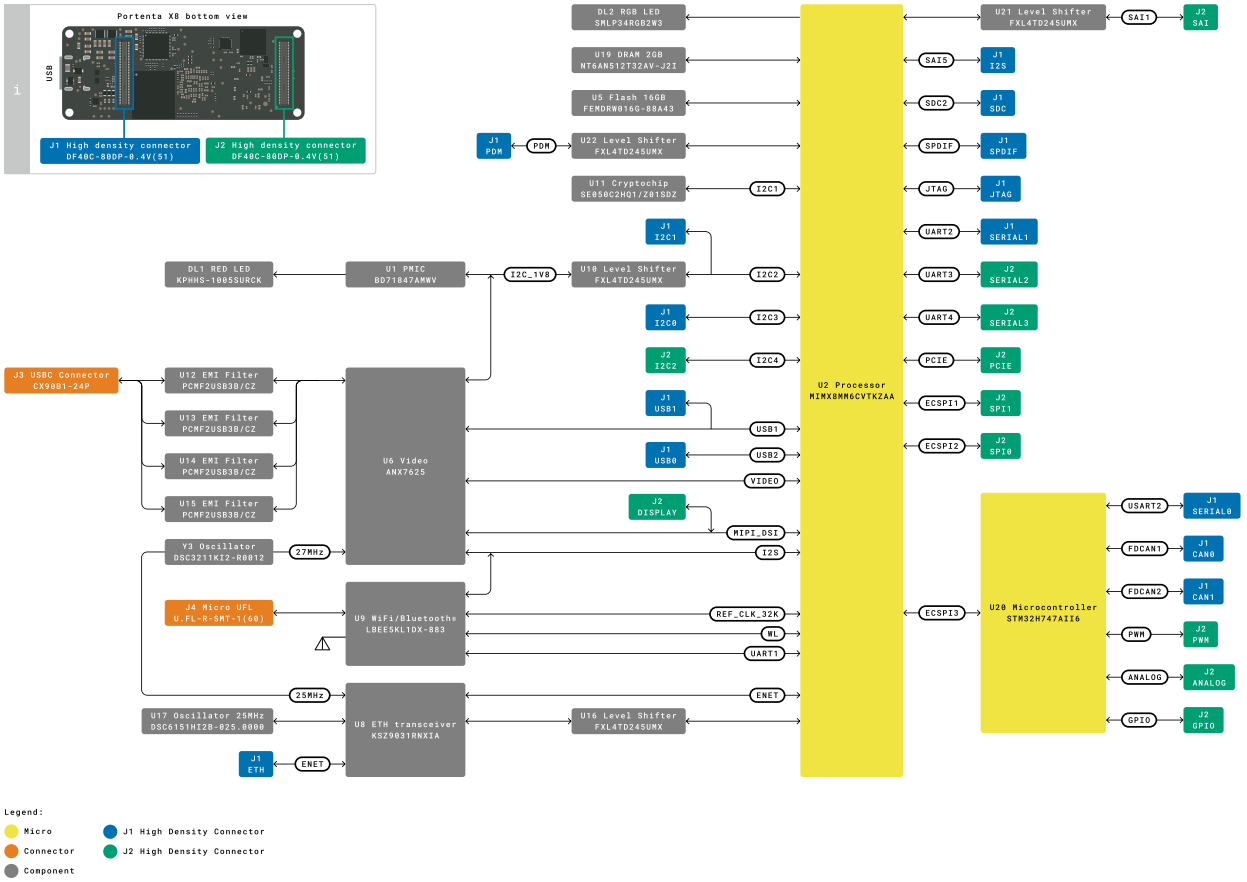

Block Diagram of Portenta X8

Downloaded from Arrow.com.

4 Board Topology

4.1 Front View

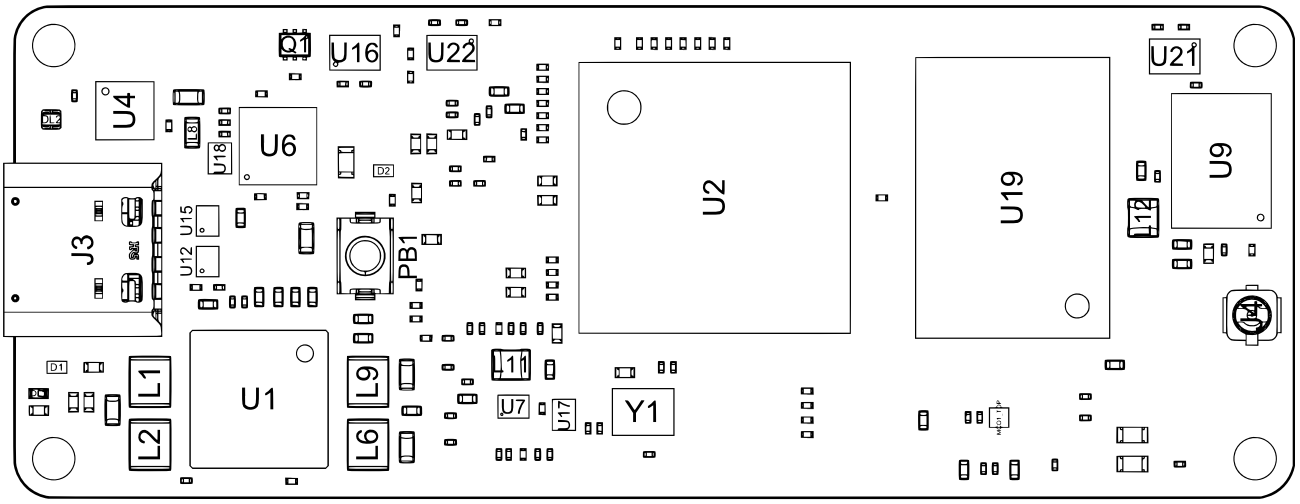

Front view of Portenta X8 Topology

Ref.	Description	Ref.	Description
U1	BD71847AMWV i.MX 8M Mini PMIC	U2	MIMX8MM6CVTKZAA i.MX 8M Mini Quad IC
U4	NCP383LMUAJAATXG Current-Limiting Power Switch	U6	ANX7625 MIPI-DSI/DPI to USB Type-C® Bridge IC
U7	MP28210 Step Down IC	U9	LBEE5KL1DX-883 WLAN+Bluetooth® Combo IC
U12	PCMF2USB3B/CZ Bidirectional EMI Protection IC	U16,U21,U22,U23	FXL4TD245UMX 4-Bit Bidirectional Voltage-level Translator IC
U17	DSC6151HI2B 25MHz MEMS Oscillator	U18	DSC6151HI2B 27MHz MEMS Oscillator
U19	NT6AN512T32AV 2GB LP-DDR4 DRAM	IC1,IC2,IC3,IC4	SN74LVC1G125DCKR 3-state 1.65-V to 5.5-V buffer IC
PB1	PTS820J25KSMTRLFS Reset Push Button	Dl1	KPHHS-1005SURCK Power On SMD LED
DL2	SMLP34RGB2W3 RGB Common Anode SMD LED	Y1	CX3225GB24000P0HPQCC 24MHz crystal
Y3	DSC2311KI2-R0012 Dual-Output MEMS Oscillator	J3	CX90B1-24P USB Type-C® connector
J4	U.FL-R-SMT-1(60) UFL Connector		

Downloaded from Arrow.com.

4.2 Back View

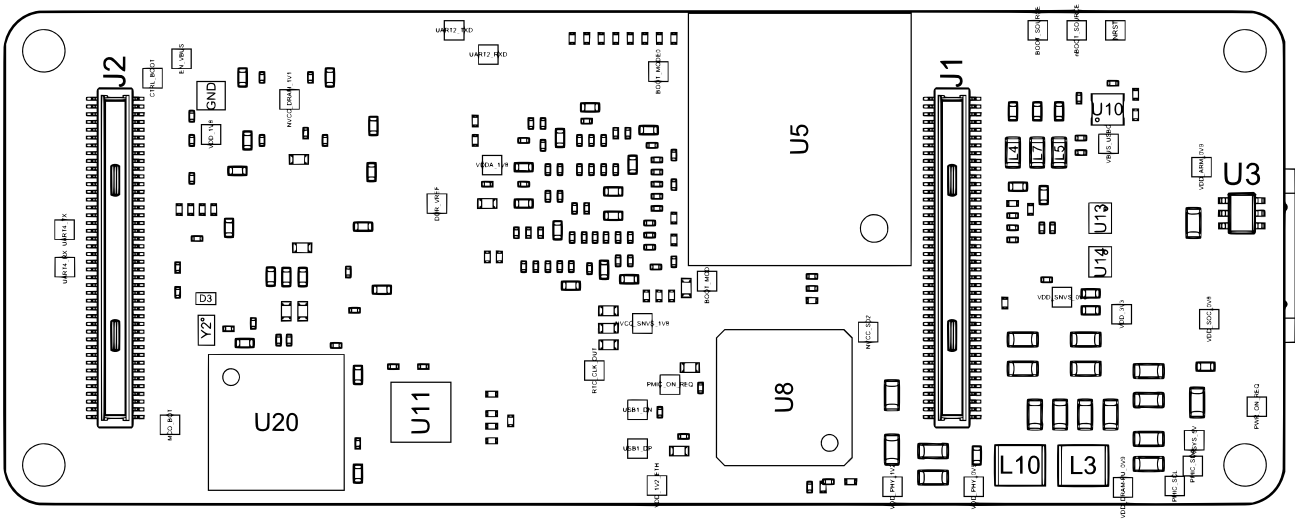

Back view of Portenta X8 Topology

Ref.	Description	Ref.	Description
U3	LM66100DCKR Ideal Diode	U5	FEMDRW016G 16GB eMMC Flash IC
U8	KSZ9031RNXIA Gigabit Ethernet Transceiver IC	U10	FXMA2102L8X Dual Supply, 2-Bit Voltage Translator IC
U11	SE050C2HQ1/Z01SDZ IoT Secure Element	U12, U13,U14	PCMF2USB3B/CZ Bidirectional EMI Protection IC
U15	NX18P3001UKZ Bidirectional power switch IC	U20	STM32H747AII6 Dual Arm® Cortex® M7/M4 IC
Y2	SIT1532AI-J4-DCC-32.768E 32.768KHz MEMS Oscillator IC	J1, J2	High density connectors
Q1	2N7002T-7-F N-Channel 60V 115mA MOSFET		

Downloaded from Arrow.com.

5 Processor

The Arduino Portenta X8 makes use of two Arm®-based physical processing units.

5.1 NXP® i.MX 8M Mini Quad Core Microprocessor

The MIMX8MM6CVTKZAA iMX8M (U2) features a quad-core Arm® Cortex® A53 running at up to 1.8 GHz for high-performance applications alongside an Arm® Cortex® M4 running at up to 400 MHz. The Arm® Cortex® A53 is capable of running a fully-fledged Linux or Android operating system through a Board Support Packages (BSP) in a multithreaded fashion. This can be expanded via the use of specialized software containers via OTA updates. The Arm® Cortex® M4 has lower power consumption allowing for effective sleep management as well as optimal performance in real-time applications and is reserved for future use. Both processors can share all peripherals and resources available on the i.MX 8M Mini, including PCIe, on-chip memory, GPIO, GPU and Audio.

5.2 STM32 Dual Core Microprocessor

The X8 includes an embedded H7 in the form of a STM32H747AII6 IC (U20) with a dual-core Arm® Cortex® M7 and Arm® Cortex® M4. This IC is used as an I/O expander for the NXP® i.MX 8M Mini (U2). Peripherals are automatically controlled via the M7 core. Additionally, the M4 core is available for real-time control of motors and other time-critical machinery at a barebones level. The M7 core acts as a mediator between the peripherals and the i.MX 8M Mini. It achieves this by running a custom firmware https://github.com/arduino/portentax8-stm32h7-fw normally invisible to the User, which maps all its peripherals as Linux devices. Advanced users can customize the M7 firmware to fit their needs but this could break the seamless Linux integration. Users are instead encouraged to write custom Arduino programs (sketches) running on the M4, which can access all the peripherals supported by the M7. The STM32H7 is not exposed to networking and should be programmed via the i.MX 8M Mini (U2).

6 Wi-Fi®/Bluetooth® Connectivity

The Murata® LBEE5KL1DX-883 wireless module (U9) simultaneously provides Wi-Fi® and Bluetooth® connectivity in an ultra-small package based on the Cypress CYW4343W. The IEEE 802.11b/g/n Wi-Fi® interface can be operated as an access point (AP), station (STA) or as dual-mode simultaneous AP/STA and supports a maximum transfer rate of 65 Mbps. Bluetooth® interface supports Bluetooth® Classic and Bluetooth® Low Energy. An integrated antenna circuitry switch allows a single external antenna (J4 or ANT1) to be shared between Wi-Fi® and Bluetooth®. Module U9 interfaces with i.MX 8M Mini (U2) via a 4bit SDIO and UART interface. Based on the software stack of the wireless module in the embedded Linux OS, Bluetooth® 5.1 is supported together with Wi-Fi® conforming to the IEEE802.11b/g/n standard.

Downloaded from Arrow.com.

7 Onboard Memories

The Arduino® Portenta X8 includes two onboard memory modules. A NT6AN512T32AV 2GB LP-DDR4 DRAM (U19) and 16GB Forsee eMMC Flash module (FEMDRW016G) (U5) are accessible to the i.MX 8M Mini (U2).

8 Crypto Capabilities

The Arduino® Portenta X8 enables IC-level edge-to-cloud security capability through the NXP® SE050C2 Crypto chip (U11). This provides Common Criteria EAL 6+ security certification up to OS level, as well as RSA/ECC cryptographic algorithm support and credential storage. It interacts with the NXP® i.MX 8M Mini via I2C.

9 Gigabit Ethernet

The NXP® i.MX 8M Mini Quad includes a 10/100/1000 Ethernet controller with support for Energy Efficient Ethernet (EEE), Ethernet AVB, and IEEE 1588. An external physical connector is required to complete the interface. This can be accessed via a high-density connector with an external component such as the Arduino® Portenta Breakout board.

Downloaded from Arrow.com.

10 USB-C® Connector

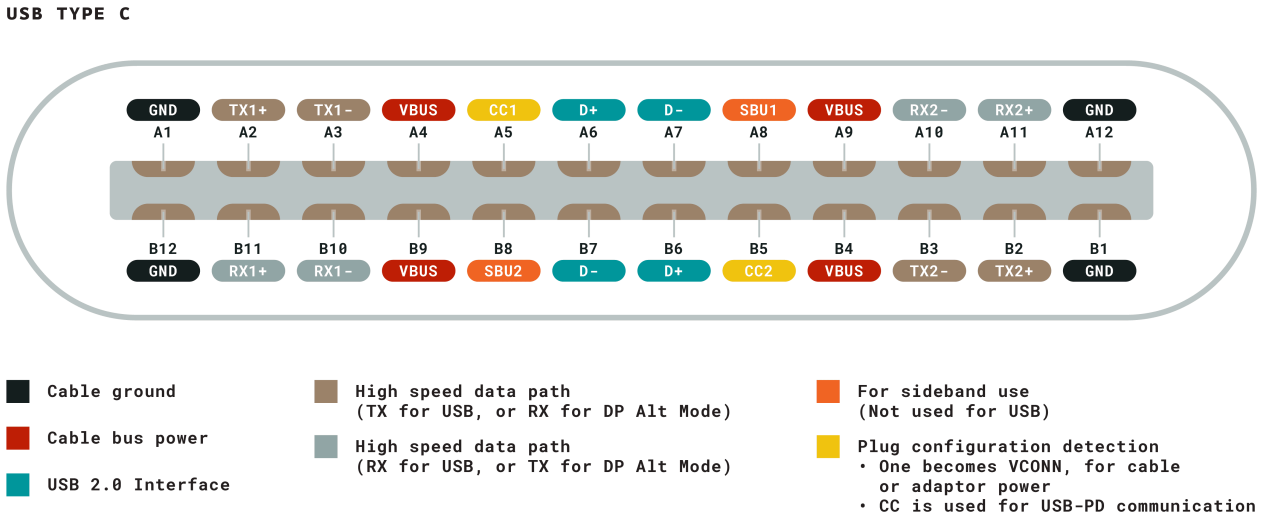

USB-C® Pinout

The USB-C® connector provides multiple connectivity options over a single physical interface:

- Provide board power supply in both DFP and DRP mode
- Source power to external peripherals when the board is powered through VIN
- Expose High Speed (480 Mbps) or Full Speed (12 Mbps) USB Host/Device interface
- Expose Displayport output interface The Displayport interface is usable in conjunction with USB and can be either used with a simple cable adapter when the board is powered via VIN or with dongles able to provide power to the board while simultaneously outputting Displayport and USB. Such dongles usually provide an ethernet over USB port, a 2-port USB hub and a USB-C® port that can be used to provide power to the system.

Downloaded from Arrow.com.

11 Real-Time Clock

The Real-Time clock allows for keeping the time of day with very low power consumption.

12 Power Tree

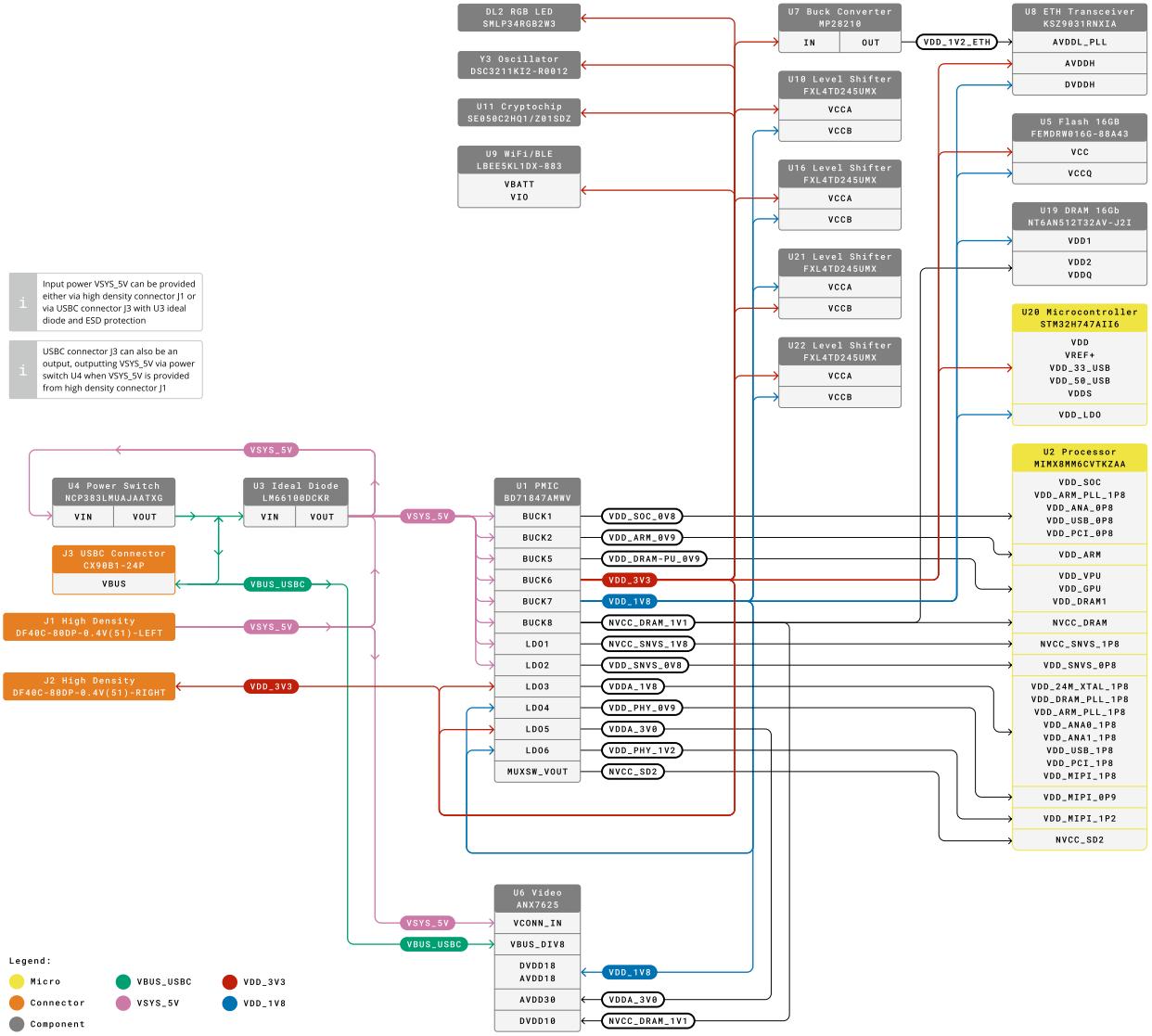

Power management is mainly performed by the BD71847AMWV IC (U1).

Downloaded from Arrow.com.

13 Board Operation

13.1 Getting Started - IDE

If you want to program your Arduino® Portenta X8 while offline you need to install the Arduino® Desktop IDE **[1]** To connect the Arduino® Edge control to your computer, you'll need a USB Type-C cable. This also provides power to the board, as indicated by the LED.

13.2 Getting Started - Arduino Cloud Editor

All Arduino® boards, including this one, work out-of-the-box on the Arduino® Cloud Editor **[2]**, by just installing a simple plugin.

The Arduino® Cloud Editor is hosted online, therefore it will always be up-to-date with the latest features and support for all boards. Follow **[3]** to start coding on the browser and upload your sketches onto your board.

13.3 Getting Started - Arduino Cloud

All Arduino® IoT enabled products are supported on Arduino® IoT Cloud which allows you to Log, graph and analyze sensor data, trigger events, and automate your home or business.

13.4 Sample Sketches

Sample sketches for the Arduino® Portenta X8 can be found either in the "Examples" menu in the Arduino® IDE or in the "Documentation" section of the Arduino Pro website **[4]**

13.5 Online Resources

Now that you have gone through the basics of what you can do with the board you can explore the endless possibilities it provides by checking exciting projects on ProjectHub **[5]**, the Arduino® Library Reference **[6]** and the online store **[7]** where you will be able to complement your board with sensors, actuators and more.

Downloaded from Arrow.com.

13.6 Board Recovery

All Arduino boards have a built-in bootloader which allows flashing the board via USB. In case a sketch locks up the processor and the board is not reachable anymore via USB it is possible to enter bootloader mode by configuring DIP switches.

Note: A compatible carrier board with DIP switches (e.g. Portenta Max Carrier, Portenta Hat Carrier, or Portenta Breakout) is required to enable bootloader mode. It cannot be enabled with the Portenta X8 alone.

14 Mechanical Information

14.1 Pinout

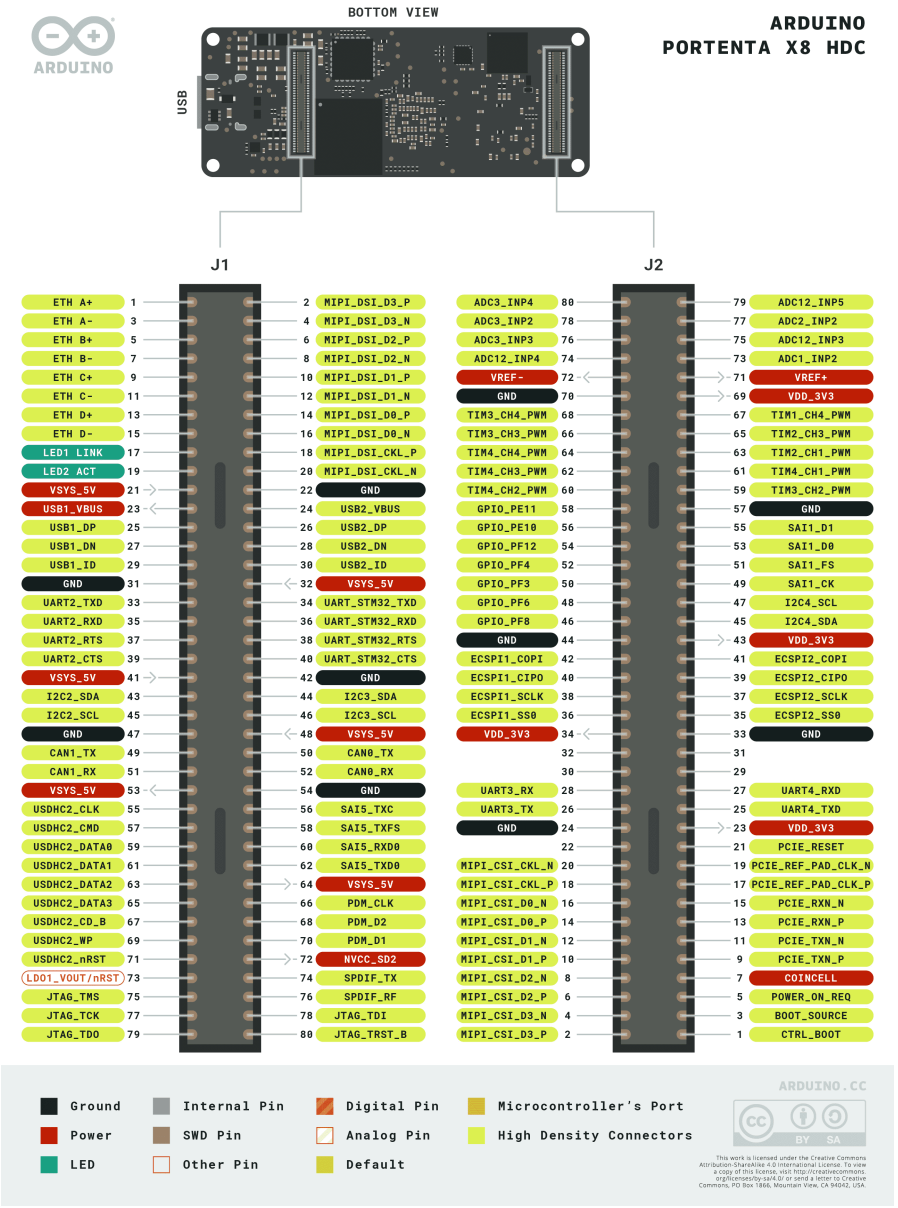

Downloaded from Arrow.com.

14.2 Mounting Holes and Board Outline

The Portenta X8 is a double-sided 66.04 mm x 25.40 mm board with a USB-C® port overhanging the top edge and two High-Density connectors on the bottom side of the board. The onboard wireless antenna connector is located on the bottom edge of the board. The board has four 2.25 mm drilled mounting holes to provide for mechanical fixing.

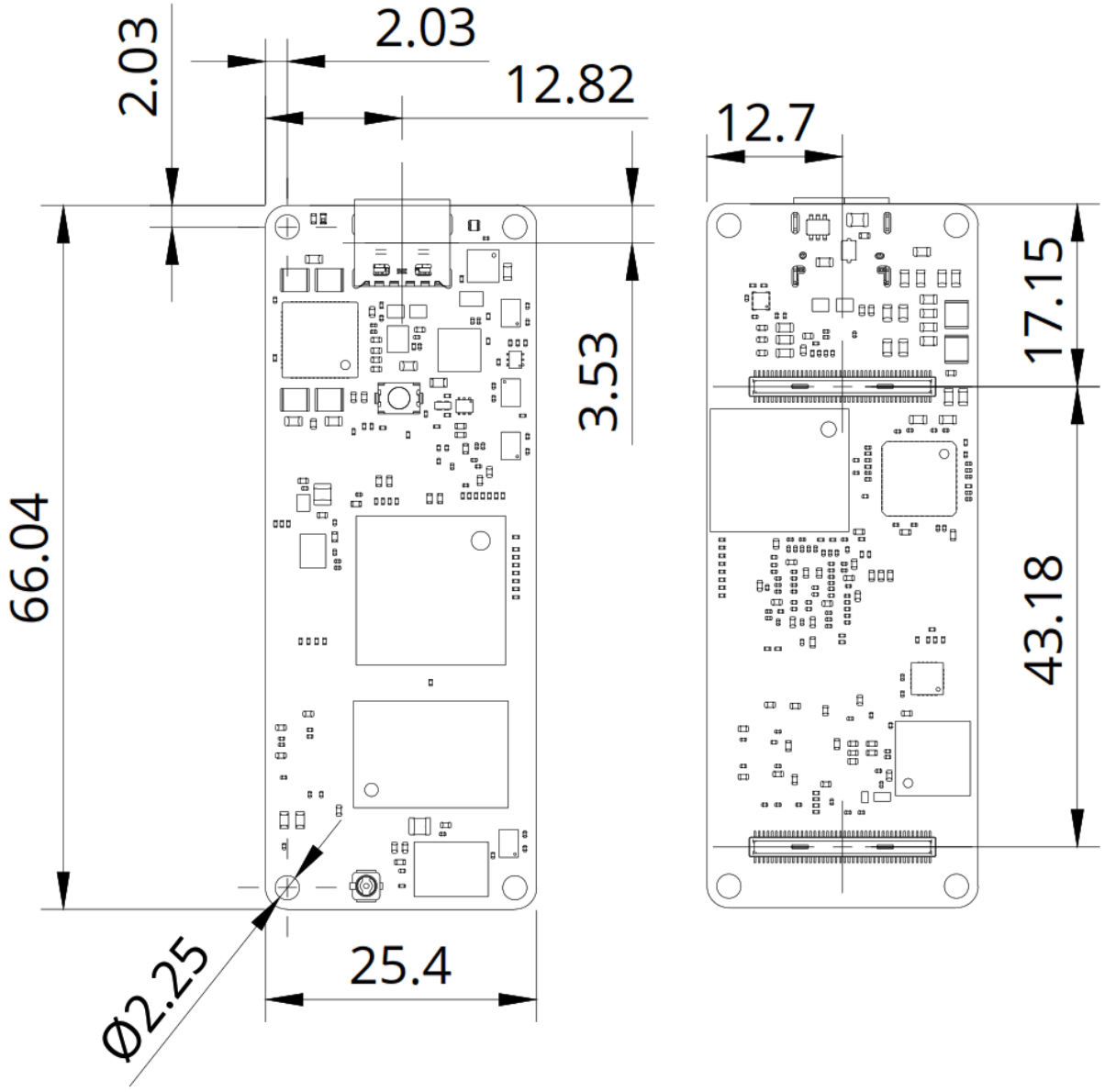

Downloaded from Arrow.com.

15 Certifications

Certification	Details
CE (EU)	EN 301489-1 EN 301489-1 EN 300328 EN 62368-1 EN 62311
WEEE (EU)	Yes
RoHS (EU)	2011/65/(EU) 2015/863/(EU)
REACH (EU)	Yes
UKCA (UK)	Yes
RCM (RCM)	Yes
FCC (US)	ID. Radio: Part 15.247 MPE: Part 2.1091
RCM (AU)	Yes

15.1 Declaration of Conformity CE DoC (EU)

We declare under our sole responsibility that the products above are in conformity with the essential requirements of the following EU Directives and therefore qualify for free movement within markets comprising the European Union (EU) and European Economic Area (EEA).

15.2 Declaration of Conformity to EU RoHS & REACH 211 01/19/2021

Arduino boards are in compliance with RoHS 2 Directive 2011/65/EU of the European Parliament and RoHS 3 Directive 2015/863/EU of the Council of 4 June 2015 on the restriction of the use of certain hazardous substances in electrical and electronic equipment.

Substance	Maximum Limit (ppm)
Lead (Pb)	1000
Cadmium (Cd)	100
Mercury (Hg)	1000
Hexavalent Chromium (Cr6+)	1000
Poly Brominated Biphenyls (PBB)	1000
Poly Brominated Diphenyl ethers (PBDE)	1000
Bis(2-Ethylhexyl} phthalate (DEHP)	1000
Benzyl butyl phthalate (BBP)	1000
Dibutyl phthalate (DBP)	1000
Diisobutyl phthalate (DIBP)	1000

Exemptions: No exemptions are claimed.

Arduino Boards are fully compliant with the related requirements of European Union Regulation (EC) 1907 /2006 concerning the Registration, Evaluation, Authorization and Restriction of Chemicals (REACH). We declare none of the

Downloaded from Arrow.com.

SVHCs (https://echa.europa.eu/web/guest/candidate-list-table), the Candidate List of Substances of Very High Concern for authorization currently released by ECHA, is present in all products (and also package) in quantities totaling in a concentration equal or above 0.1%. To the best of our knowledge, we also declare that our products do not contain any of the substances listed on the "Authorization List" (Annex XIV of the REACH regulations) and Substances of Very High Concern (SVHC) in any significant amounts as specified by the Annex XVII of Candidate list published by ECHA (European Chemical Agency) 1907 /2006/EC.

15.3 Conflict Minerals Declaration

As a global supplier of electronic and electrical components, Arduino is aware of our obligations with regards to laws and regulations regarding Conflict Minerals, specifically the Dodd-Frank Wall Street Reform and Consumer Protection Act, Section 1502. Arduino does not directly source or process conflict minerals such as Tin, Tantalum, Tungsten, or Gold. Conflict minerals are contained in our products in the form of solder, or as a component in metal alloys. As part of our reasonable due diligence, Arduino has contacted component suppliers within our supply chain to verify their continued compliance with the regulations. Based on the information received thus far we declare that our products contain Conflict Minerals sourced from conflict-free areas.

16 FCC Caution

Any Changes or modifications not expressly approved by the party responsible for compliance could void the user's authority to operate the equipment.

This device complies with part 15 of the FCC Rules. Operation is subject to the following two conditions:

(1) This device may not cause harmful interference

(2) this device must accept any interference received, including interference that may cause undesired operation.

FCC RF Radiation Exposure Statement:

1. This Transmitter must not be co-located or operating in conjunction with any other antenna or transmitter.
2. This equipment complies with RF radiation exposure limits set forth for an uncontrolled environment.
3. This equipment should be installed and operated with a minimum distance of 20cm between the radiator & your body.

English: User manuals for license-exempt radio apparatus shall contain the following or equivalent notice in a conspicuous location in the user manual or alternatively on the device or both. This device complies with Industry Canada license-exempt RSS standard(s). Operation is subject to the following two conditions:

(1) this device may not cause interference

(2) this device must accept any interference, including interference that may cause undesired operation of the device.

French: Le présent appareil est conforme aux CNR d'Industrie Canada applicables aux appareils radio exempts de licence. L'exploitation est autorisée aux deux conditions suivantes :

(1) l' appareil nedoit pas produire de brouillage

Downloaded from Arrow.com.

(2) l'utilisateur de l'appareil doit accepter tout brouillage radioélectrique subi, même si le brouillage est susceptible d'en compromettre le fonctionnement.

IC SAR Warning:

English This equipment should be installed and operated with a minimum distance of 20cm between the radiator and your body.

French: Lors de l' installation et de l' exploitation de ce dispositif, la distance entre le radiateur et le corps est d 'au moins 20 cm.

Important: The operating temperature of the EUT can't exceed 85°C and shouldn't be lower than -40°C.

Hereby, Arduino S.r.l. declares that this product is in compliance with essential requirements and other relevant provisions of Directive 201453/EU. This product is allowed to be used in all EU member states.

Frequency bands	Maximum output power (ERP)
2.4 GHz, 40 channels	+6dBm

17 Company Information

Company name	Arduino SRL
Company Address	Via Andrea Appiani 25, 20900, MONZA MB, Italy

18 Reference Documentation

Ref	Link
Arduino IDE (Desktop)	https://www.arduino.cc/en/Main/Software
Arduino IDE (Cloud)	https://create.arduino.cc/editor
Cloud IDE Getting Started	https://create.arduino.cc/projecthub/Arduino_Genuino/getting-started-with-arduino-web-editor-4b3e4a
Arduino Pro Website	https://www.arduino.cc/pro
Project Hub	https://create.arduino.cc/projecthub?by=part&part_id=11332&sort=trending
Library Reference	https://github.com/arduino-libraries/
Online Store	https://store.arduino.cc/

Downloaded from Arrow.com.

19 Change Log

Date	Revision	Changes
03/09/2024	6	Cloud Editor updated from Web Editor
11/12/2023	5	Add Portenta Hat Carrier compatibility
07/11/2023	4	Add missing board dimensions
26/01/2023	3	Clarify open-source nature of M7 core
12/09/2022	2	Make cores clear, minor fixes
24/03/2022	1	Release

Downloaded from Arrow.com.