THIS DRAWING AND THE SUBJECT MATTER SHOWN THEREON ARE CONFIDENTIAL AND THE PROPERTY OF BEL/STEWART/TRP CONNECTOR AND SHALL NOT BE REPRODUCED, COPIED, OR USED IN ANY MANNER WITHOUT THE WRITTEN CONSENT OF TRP CONNECTOR.

PRODUCT MAY BE PROTECTED BY ONE OR MORE OF THE FOLLOWING US PATENTS:
5736910 5939955 6425781 6428361 6554638 6840817 7123117
7429195 7717749 7808751 6217391 6149050 7924130

REVISIONS

P	LTR	DESCRIPTION	DATE	DWN	APVD
	F	EC-14110035, LOGO CHANGE	05JAN2015	JC	TY

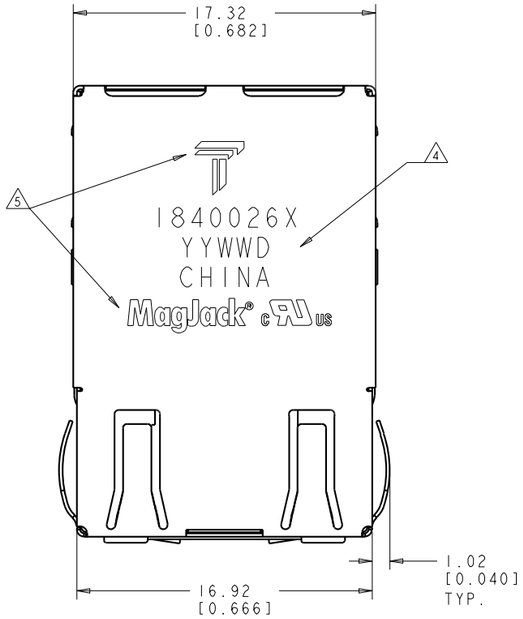

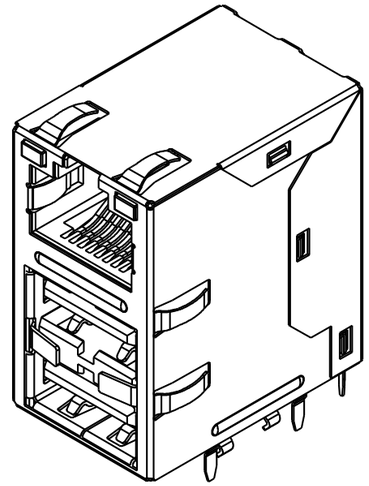

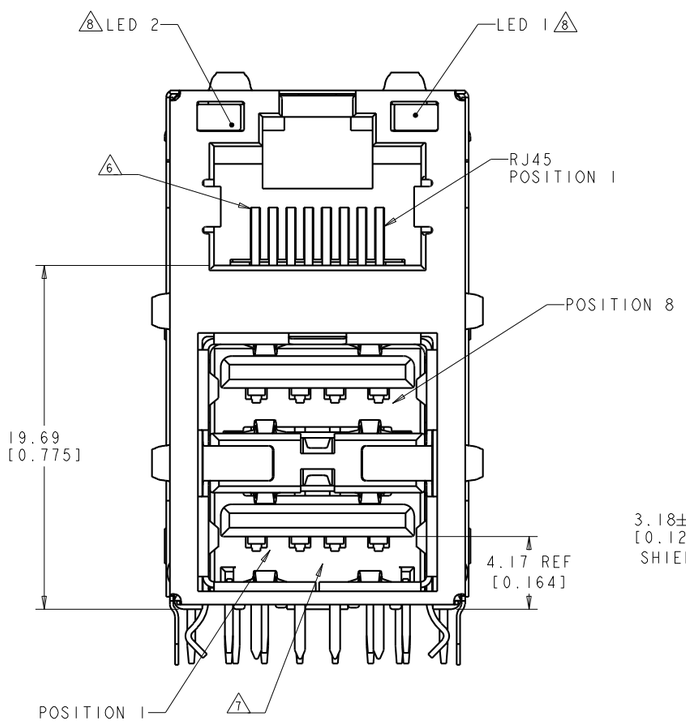

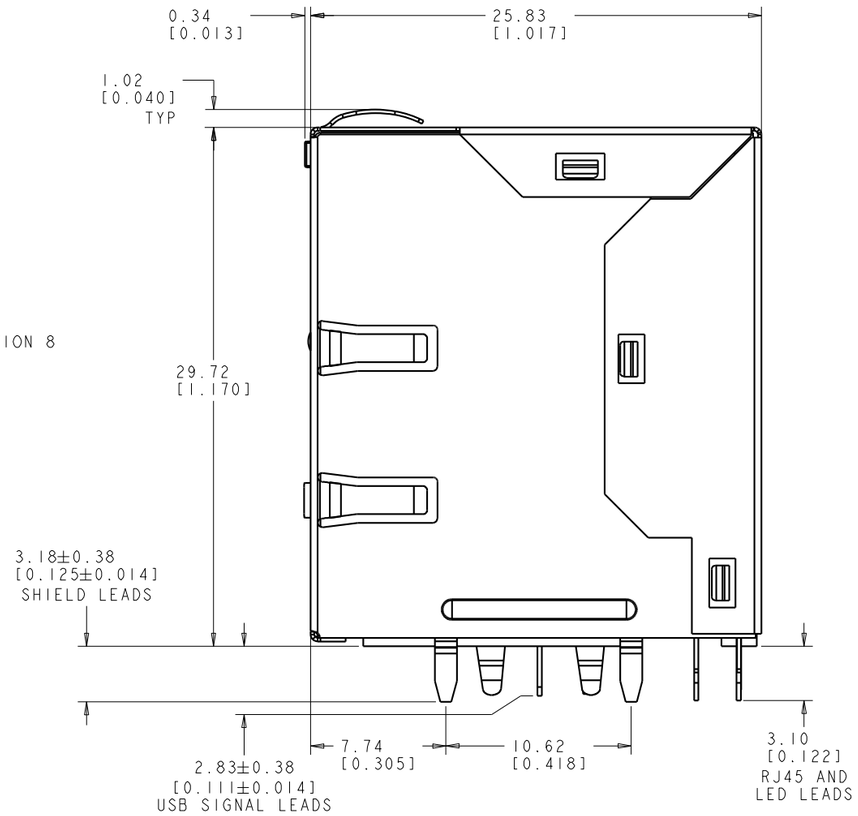

1. USB MATERIALS:
   SHELL: PHOSPHOR BRONZE
   HOUSING: BLACK, THERMOPLASTIC, GLASS FILLED, UL 94V-0 RATED
   CONTACT: PHOSPHOR BRONZE WITH SELECTIVE GOLD PLATING, 0.76um MIN IN CONTACT REGION
   SPRING CLIP: COPPER ALLOY

   RJ45 MATERIALS:
   HOUSING: BLACK, THERMOPLASTIC FLAMMABILITY RATING UL 94V-0
   SHIELD: BRASS, PREPLATED WITH 0.76um SEMI-BRIGHT NICKEL, POST DIPPED WITH 2.54um MIN SAC SOLDER ON SOLDER TAILS.
   CONTACTS: PHOSPHOR BRONZE,0.30 mm THK,1.27um MIN OVERALL NICKEL UNDERPLATE WITH SELECT CERTAIN THICKNESS GOLD AT MATING INTERFACE AND 2.54um MIN MATTE TIN AND/OR SAC SOLDER ON SOLDER TAILS.

   LED: DIFFUSED EPOXY LENS,0.5 X 0.5 CARBON STEEL WIREFRAME LEADS PREPLATED WITH 2.03um MIN SILVER OVER 1.02um MIN NICKEL UNDERPLATE OVER 1.02um COPPER UNDERPLATE. POST-PLATED WITH 2.54um MIN MATTE TIN AND/OR SAC SOLDER DIP OR PURE TIN SOLDER DIP.

2. MAGNETICS
   -APPLICATION : 10/100 BASE-T
   -IMPEDANCE: 100 OHMS
   -TURNS RATIO(CHIP:CABLE): TX=1:1, RX=1:1
   -OPEN CIRCUIT INDUCTANCE(OCL):350uH MIN @100kHz, 0.1 VRMS, 8mADC BIAS FROM 0°C TO 70°C, TX AND RX
   -PERFORMANCE @ 25°C:
   INSERTION LOSS (IL): 1.1 dB MAX FROM 0.5MHz TO 100MHz
   RETURN LOSS (RL): 18dB MIN FROM 0.5MHz TO 30MHz
   18-20LOG(f/30)dB MIN FROM 30.1 MHz TO 60MHz
   12dB MIN FROM 60.1MHz TO 80MHz
   CROSSTALK ATTENUATION:35 dB MIN FROM 0.5 MHz TO 40 MHz
   33-20LOG(f/50) dB MIN FROM 40.1 MHz TO 100 MHz
   COMMOM MODE REJECTION RATIO (CMRR): 30dB MIN FROM 0.5MHz TO 100MHz
   -ISOLATION VOLTAGE:COMPLIES WITH IEEE802.3 2002,PARA 40.6.1.1,ITEM b.

3. OPERATING TEMPERATURE: 0°C TO + 70°C.

4. PART NUMBER, DATE CODE AND COUNTRY OF ORIGIN TO BE LOCATED IN APPROXIMATE AREA SHOWN.
   DATE CODE: YYWWD "YY" IS YEAR, "WW" IS WORK WEEK, "D" IS DAY OF WEEK, WITH SUNDAY=1.

5. AGENCY APPROVAL LOGO, TRP CONNECTOR LOGO LOCATED IN APPROXIMATE AREA SHOWN.

6. RJ45 CAVITY CONFORMS TO FCC RULES AND REGULATION PART 68 SUBPART F.

7. MATING INTERFACE COMPIES WITH USB (UNIVERSAL SERIAL BUS) SPECIFICATION REV 2.0, UTILIZING TYCO P/N 292323-1 WITH USB 2.0 CERTIFICATE TEST ID NO. 60000242.

8. LED IS DRIVEN WITH CONSTANT CURRENT APPROX 20 mA
   DOMINANT WAVE LENGTH(λ D):GREEN 568 nm TYP, AT IF=20mA
   FORWARD VOLTAGE(VF):GREEN 2.2V AT IF=20mA
   DOMINANT WAVE LENGTH(λ D):YELLOW 588 nm TYP, AT IF=20mA
   FORWARD VOLTAGE(VF):YELLOW 2.1V AT IF=20mA
   DOMINANT WAVE LENGTH(λ D):ORANGE 605 nm TYP, AT IF=20mA
   FORWARD VOLTAGE(VF):ORANGE 2.1V AT IF=20mA

9. THESE PARTS ARE COMPLIANT WITH WAVE SOLDERING PROCESS, PEAK SOLDERING TEMPERATURE IS 260°C MAX, 10 SECONDS MAX.

GOLD THICKNESS	LED2	LED1	DECOUPLING CAPACITOR	PART NUMBER
1.27um MIN	GREEN	GREEN	1000 pF, 2KV	2-1840026-1
0.76um MIN	GREEN	GREEN	1000 pF, 3KV	1-1840026-1
0.76um MIN	GREEN/ORANGE	YELLOW	1000 pF, 3KV	1840026-2
0.76um MIN	GREEN/ORANGE	YELLOW	1000 pF, 2KV	1840026-1

THIS DRAWING IS A CONTROLLED DOCUMENT.

DIMENSIONS: mm

TOLERANCES UNLESS OTHERWISE SPECIFIED:
0 PLC ±0.25
1 PLC ±0.25
2 PLC ±0.25
3 PLC ±0.25
4 PLC ±0.25
ANGLES ±

PRODUCT SPEC 108-104005
APPLICATION SPEC -

DWN SKY ZHAO 21AUG2008
CHK KEITH ZHU 21AUG2008
APVD TEDDY XIONG 21AUG2008

trp CONNECTOR a bel group — DONGGUAN CHINA

MODEL NAME: MAGJACK OVER USB NON-PoE

DESC: MAGJACK OVER DUAL USB UR204P12, 10/100 CIRCUIT, W/ LEDS

SIZE A1 | CAGE CODE | DRAWING NO C-1840026 | RESTRICTED TO -

CUSTOMER DRAWING | SCALE 4:1 | SHEET 1 OF 3 | REV F

Downloaded from Arrow.com.

© COPYRIGHT TRP connector ALL RIGHTS RESERVED

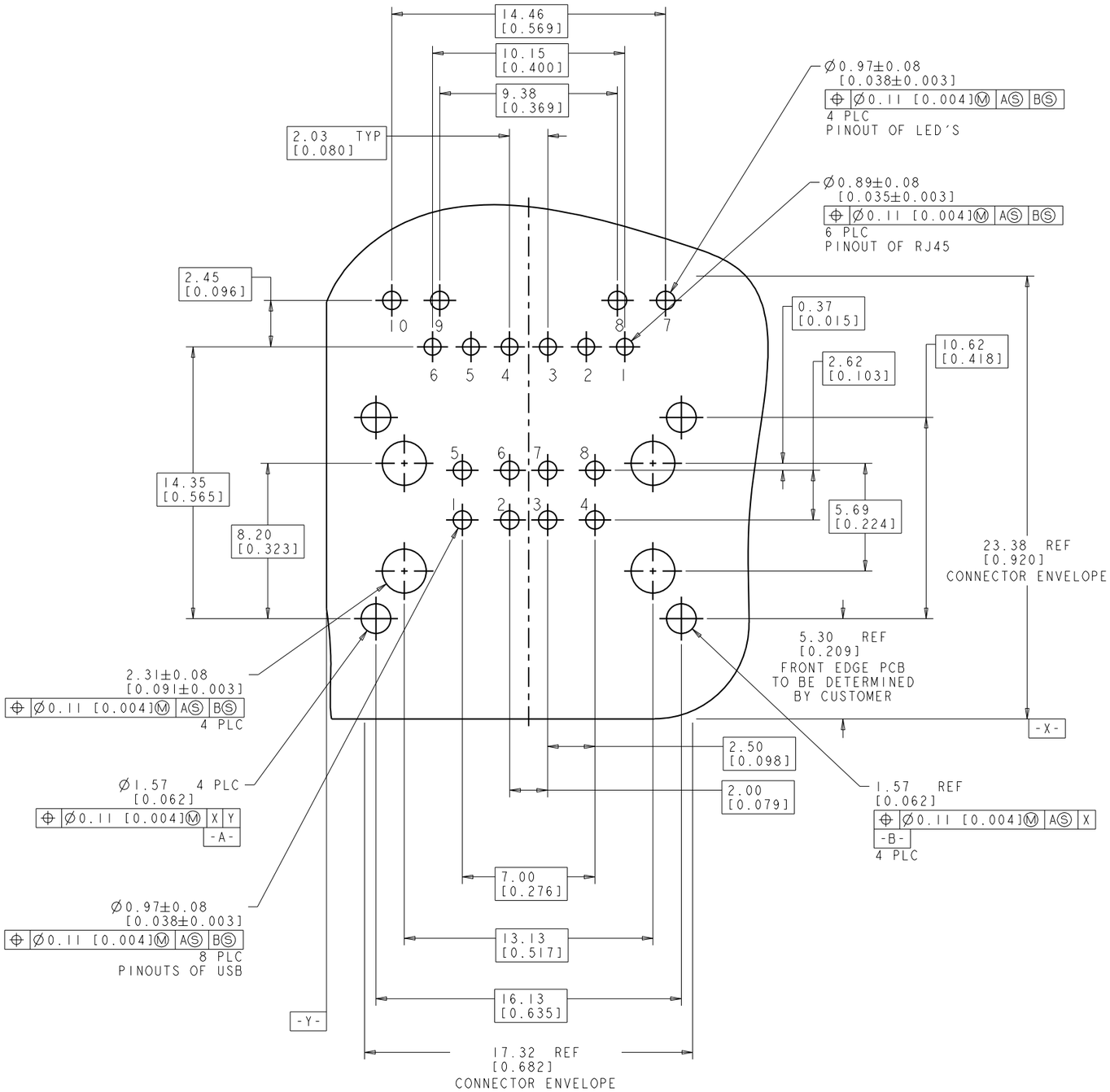

RECOMMENDED PCB FOOTPRINT
COMPONENT SIDE
SCALE 8:1

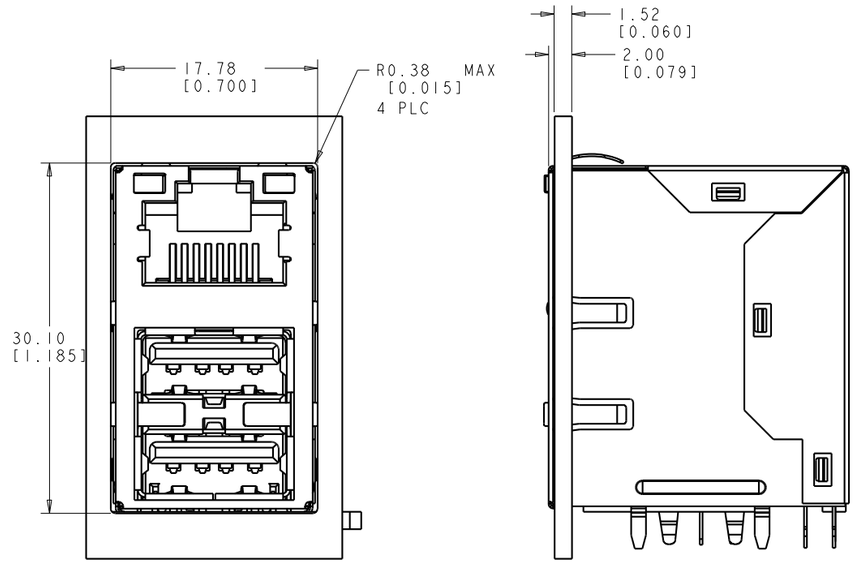

SUGGESTED PANEL CUTOUT DIMENSIONS
SCALE 4:1

THIS DRAWING IS A CONTROLLED DOCUMENT.

DIMENSIONS: mm

TOLERANCES UNLESS OTHERWISE SPECIFIED:
0 PLC ±0.25
1 PLC ±0.25
2 PLC ±0.25
3 PLC ±0.25
4 PLC ±0.25
ANGLES ±

PRODUCT SPEC 108-104005
APPLICATION SPEC -

DWN SKY ZHAO 21AUG2008
CHK KEITH ZHU 21AUG2008
APVD TEDDY XIONG 21AUG2008

trp CONNECTOR a bel group — DONGGUAN CHINA

MODEL NAME: MAGJACK OVER USB NON-PoE

DESC: MAGJACK OVER DUAL USB
UR204P12, 10/100 CIRCUIT, W/ LEDS

SIZE A1 | CAGE CODE | DRAWING NO C-1840026 | RESTRICTED TO -

CUSTOMER DRAWING | SCALE 4:1 | SHEET 2 OF 3 | REV F

Downloaded from Arrow.com.

© COPYRIGHT TRP connector ALL RIGHTS RESERVED

Circuit UR204P12 Schematic △2

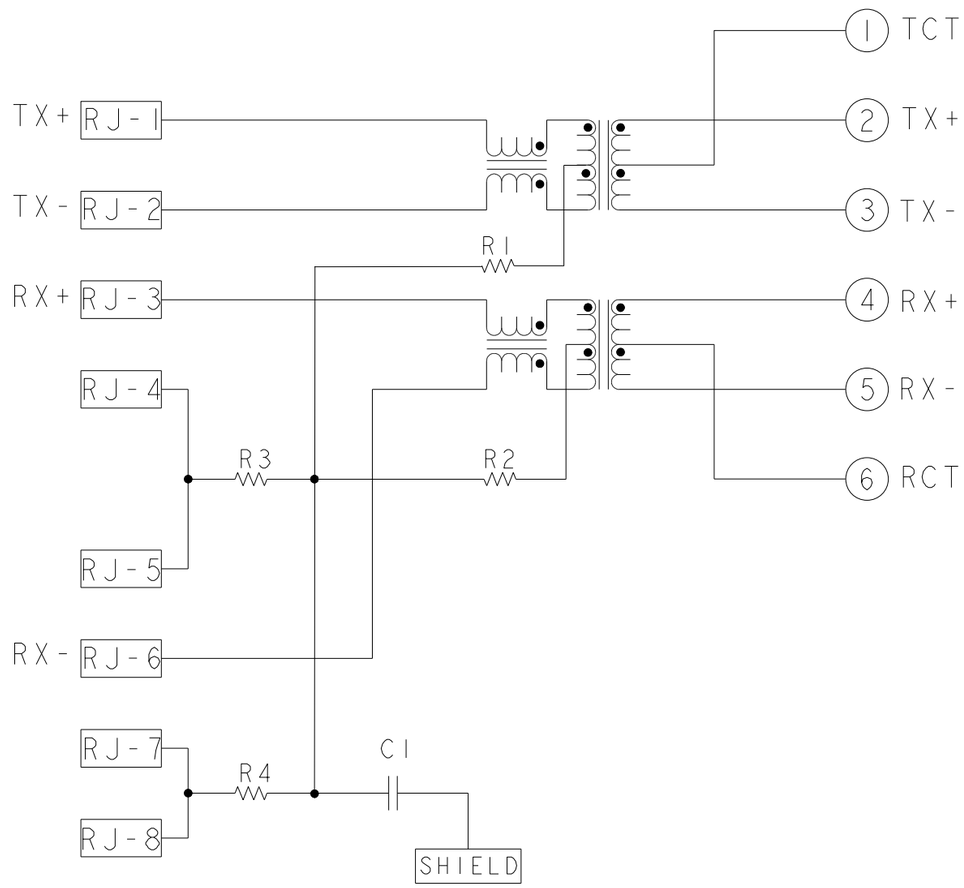

R1-R4 = 75 Ohms, 1/16W, 5%
C1 = 1000pF, 2kV

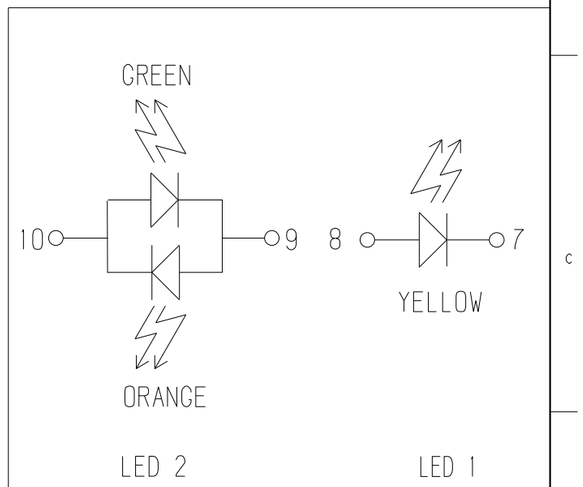

1840026-1 & 1840026-2

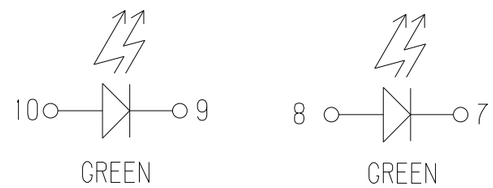

1-1840026-1 & 2-1840026-1

THIS DRAWING IS A CONTROLLED DOCUMENT.	DWN SKY ZHAO 21AUG2008	trp CONNECTOR a bel group	DONGGUAN CHINA
DIMENSIONS: mm	CHK KEITH ZHU 21AUG2008		
TOLERANCES UNLESS OTHERWISE SPECIFIED: 0 PLC ±0.25, 1 PLC ±0.25, 2 PLC ±0.25, 3 PLC ±0.25, 4 PLC ±0.25, ANGLES ±	APVD TEDDY XIONG 21AUG2008	DESC MAGJACK OVER DUAL USB UR204P12, 10/100 CIRCUIT, W/ LEDS	
	MODEL NAME MAGJACK OVER USB NON-PoE	SIZE A1 / CAGE CODE / DRAWING NO ©-1840026	RESTRICTED TO -
PRODUCT SPEC 108-104005	APPLICATION SPEC -	CUSTOMER DRAWING	SCALE 4:1 / SHEET 3 OF 3 / REV F

Downloaded from Arrow.com.