Resin filter kits

Airflow - Static pressure characteristics

Measured with our double chamber measuring device (120 mm sq. type)

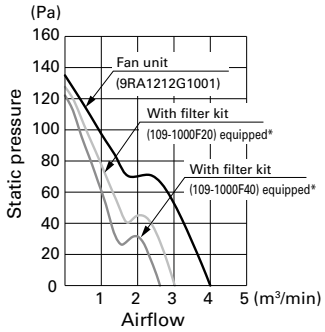

Applied voltage: 12 VDC
* Filter kit is attached on air inlet side of fan.

Mounting example

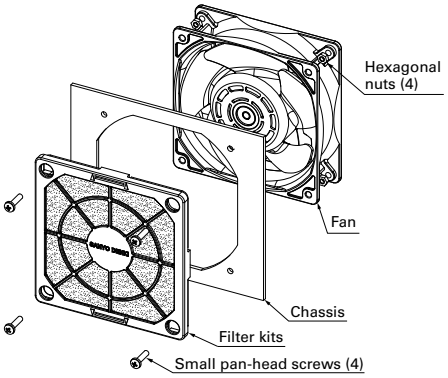

Filter replacement (example)

To replace the filter, remove the front cover of the filter kit.

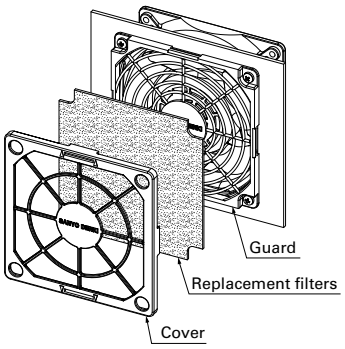

- Filter kit is one of the option to keep air in the chassis clean filtering dust in external atmosphere when pulling-air cooling is implemented. The filter kit is hooked up through mounting hole of fan frame with screw as well as finger guard. Some performances (airflow & static pressure) of the fan motor decreases when filter kit is hooked up.
- This Filter Kit is composed of 3 components, including a guard, a filter and a cover. It is delivered as a finished product at delivery, saving assembly time when mounting. It can be mounted by inserting a screw in the apertures of the cover.
- The filter and cover can be easily removed from the guard with one touch. There is no need for fan removal when undertaking maintenance. ● Operating temperature limit is between -10 to +60˚C. (non-condensing)
- The filter will deteriorate with age, and the level of deterioration will vary upon usage conditions. Please be aware that the filter has a greater tendency to deteriorate under high temperature and humidity. For long-term storage, please store under the temperature range of 10 to 30˚C, humidity range of 20 to 65%. Usage and storage period is approximately 2 years.
- Cooling ability decreases with filter contamination due to clogging. Filter replacement is recommended approximately every six months of usage. Please replace the filter if deterioration or clogging is seen at inspection.
- When replacing the filter, please use genuine SANYO DENKI filters. ●Do not water-wash the filter.
- Avoid use and storage under high temperature or humidity, direct sunlight or exposure to ultraviolet light, or in corrosive gas. ●No nuts or screws for use in attachment included.

Downloaded from Arrow.com.