# 6-1542007-5 Product Details

Live Product Chat US Only 8:30am - 5pm ET, Mon - Fri

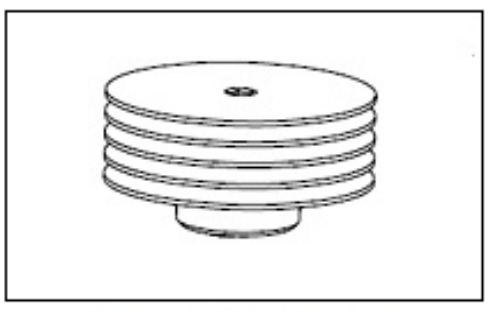

**6-1542007-5**

TE Part Number: 6-1542007-5
Active
Add to Part List

## Heat Sink Assemblies

Converted to EU RoHS/ELV Compliant (Statement of Compliance)

**Product Highlights:**
- Heat Sink
- BGA
- Package Size = 25 [.985] mm [in]
- For Use With BGA Semiconductor Packages
- Power Air Velocity Thermal Resistance

View all Features | Find Similar Products

**Quick Links**
- Check Pricing & Availability
- Search for Tooling
- Product Feature Selector
- Contact Us About This Product

## Documentation & Additional Information

**Product Drawings:**
- 21mm HEATSINK ASSEMBLY (PDF, English)

**Catalog Pages/Data Sheets:**
- None Available

**Product Specifications:**
- None Available

**Application Specifications:**
- None Available

**Instruction Sheets:**
- None Available

**CAD Files:**
- None Available

List all Documents

**Additional Information:**
- Product Line Information

**Related Products:**
- Tooling

## Product Features (Please use the Product Drawing for all design activity)

**Product Type Features:**
- Product Type = Heat Sink
- Device Type = BGA
- For Use With = BGA Semiconductor Packages
- Finish = Black Anodize
- Material = Die Cast Aluminum
- Comment = Mounting clip does not increase overall heat sink height.

**Electrical Characteristics:**
- Heat Sink Type = 5 Fin Radial
- Fan Type = No Fan

**Termination Related Features:**
- Height (mm [in]) = 16.54 [0.651]

**Body Related Features:**
- Package Size (mm [in]) = 25 [.985]
- Flammability Rating = UL 94V-0

**Configuration Related Features:**
- Diameter (mm [in]) = 34.92 [1.375]

**Industry Standards:**
- RoHS/ELV Compliance = RoHS compliant, ELV compliant
- Lead Free Solder Processes = Not relevant for lead free process
- RoHS/ELV Compliance History = Converted to comply with RoHS directive

**Other:**
- Brand = Tyco Electronics
- Line = ChipCoolers

## Interrelated Features

| When Power (W) is: | And Air Velocity is: | Thermal Resistance (°C) is: |
|---|---|---|
| 5.0 | 0 LFM | 8.85 |
| 5.0 | 200 LFM | 4.55 |
| 5.0 | 400 LFM | 3.45 |
| 5.0 | 600 LFM | 2.55 |
| 10.0 | 0 LFM | 7.97 |
| 10.0 | 200 LFM | 5.42 |
| 10.0 | 400 LFM | 3.39 |
| 10.0 | 600 LFM | 2.45 |
| 15.0 | 0 LFM | 7.41 |
| 15.0 | 200 LFM | 4.57 |
| 15.0 | 400 LFM | 3.34 |
| 15.0 | 600 LFM | 2.42 |


© 2008 Tyco Electronics Corporation All Rights Reserved
Downloaded from Arrow.com.