MICRO SWITCH
a Honeywell Division
FED. MFG. CODE 91929

SWITCH–ENCLOSED

CATALOG LISTING
604HE3–6

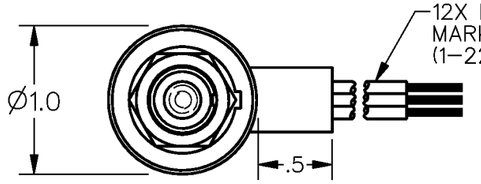

12X NO. 22 WIRE LEAD PER MIL–W–22759/7
MARKED WITH IDENTIFICATION AND WIRE GAGE
(1–22, 2–22, ETC) PER MIL–W–5088

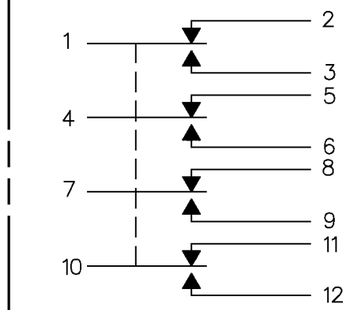

CIRCUIT DIAGRAM

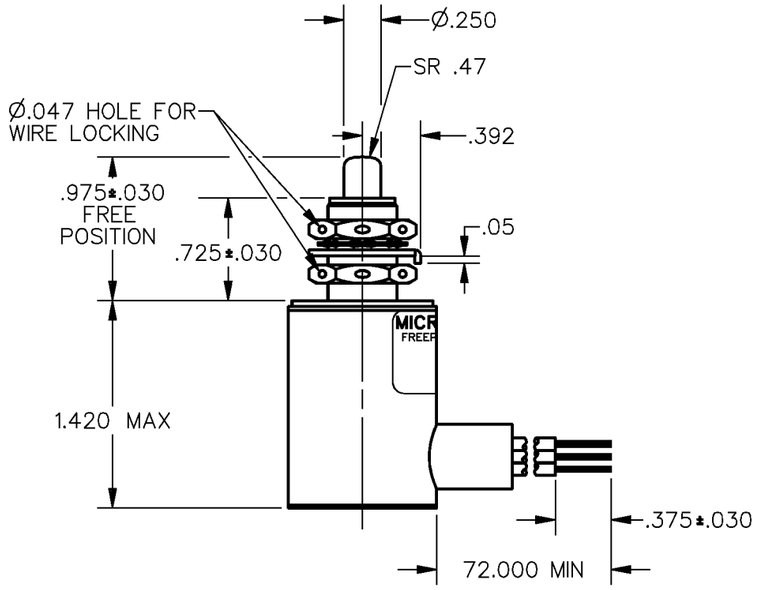

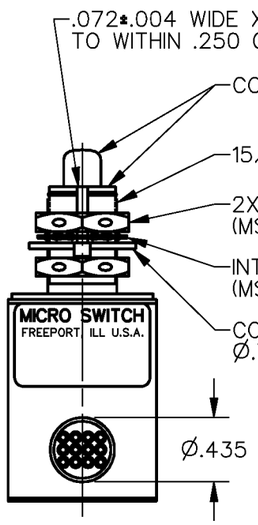

.072±.004 WIDE X .031±.003 DEEP KEYWAY
TO WITHIN .250 OF SHOULDER

CORROSION RESISTANT STEEL PLUNGER AND BUSHING

15/32–32 UNS–2A THREAD TO WITHIN .093 OF SHOULDER

2X HEX NUT .62 ACROSS FLATS X .125 THICK △5△7
(MS 21340–24)

INTERNAL TOOTH LOCKWASHER Ø.60 X (.018) THICK △5△7
(MS 35333–136)

CORROSION RESISTANT STEEL KEYING WASHER
Ø.72 X .040 THICK, TAB .110 WIDE (MS 25081C4) △5△7

CHARACTERISTICS	
OPERATING FORCE	5 –12 LB
FULL OVERTRAVEL FORCE	30 LB MAX
RELEASE FORCE	3 LB MIN
PRETRAVEL	.040 MAX
DIFFERENTIAL TRAVEL	.020 MAX
OVERTRAVEL	.125 MIN

ELECTRICAL DATA	
CONTACT ARRANGEMENT	4X S P D T
LOAD	28 VDC
	SEA LEVEL & 100,000 FT.
RES	4
IND	4
MOTOR	4

THIRD ANGLE PROJECTION

SCALE FULL

DO NOT SCALE PRINT

UNLESS OTHERWISE SPECIFIED TOLERANCES ARE

ONE PLACE	(.0)	±.030
TWO PLACE	(.00)	±.015
THREE PLACE	(.000)	±.005
ANGLES		±

WEIGHT

ANSI Y14.5M–1982 APPLIES

NOTES
1 – CORROSION RESISTANT STEEL ENCLOSURE
2 – SWITCH SEALED PER MIL–S–8805 SYMBOL 5
3 – COINCIDENCE OF OPERATING AND RELEASING POINTS: .010 INCH OF PLUNGER TRAVEL
4 – CIRCUIT DIAGRAM, AND CATALOG LISTING SHOWN ON NAMEPLATE
△5 REPLACEMENT MOUNTING HARDWARE – PACKET 19PA9
6 – FOR OPERATION IN TEMPERATURE OF MINUS 65°F TO PLUS 257°F
△7 HARDWARE MAY BE PACKAGED UNASSEMBLED PER MIL–S–8805

THIS DRAWING COVERS A PROPRIETARY ITEM AND IS THE PROPERTY OF MICRO SWITCH. A DIVISION OF HONEYWELL. THIS DRAWING IS NOT TO BE COPIED OR USED WITHOUT THE APPROVAL OF MICRO SWITCH

CATALOG LISTING 604HE3–6
ISSUE 3 M PAGE 1 OF 1
RELEASE NO. PR–21132
REPLACES

REVISIONS
A PR–21132 TSM 31 MAY 93
B C093183 J A S 12 JUN 98

DDM/CAD DRAWN 31MAY94 TSM CHECK

Downloaded from Arrow.com.