A Product Line of
Diodes Incorporated

PI49FCT3805D

3.3V, 2 x 1:5 CMOS Clock Driver

Features

- Low output skew: <200ps
- Switching frequency up to 166 MHz
- Fast output rise/fall time: <1.0ns
- Low propagation delay: <2.5ns
- Low input capacitance: <6.0pF
- Balanced CMOS outputs
- Industrial Temperature: –40°C to +85°C
- 3.3V ±10% operation, 5V Input Tolerant
- Totally Lead-Free & Fully RoHS Compliant (Notes 1 & 2)
- Halogen and Antimony Free. "Green" Device (Note 3)
- For automotive applications requiring specific change control (i.e. parts qualified to AEC-Q100/101/200, PPAP capable, and manufactured in IATF 16949 certified facilities), please contact us or your local Diodes representative. https://www.diodes.com/quality/product-definitions/
- Packaging (Pb-free & Green available):
  - 20-pin, 150-mil wide QSOP (Q)
  - 20-pin, 209-mil wide SSOP (H)

Description

Diodes' PI49FCT3805D is composed of non-inverting drivers. The outputs are configured into 2 groups of one-in, five-out with independent output enable. Group B has an extra MON output. Excellent output signals to power and ground ratio minimize power and ground noise and also improves output performance.

Block Diagram

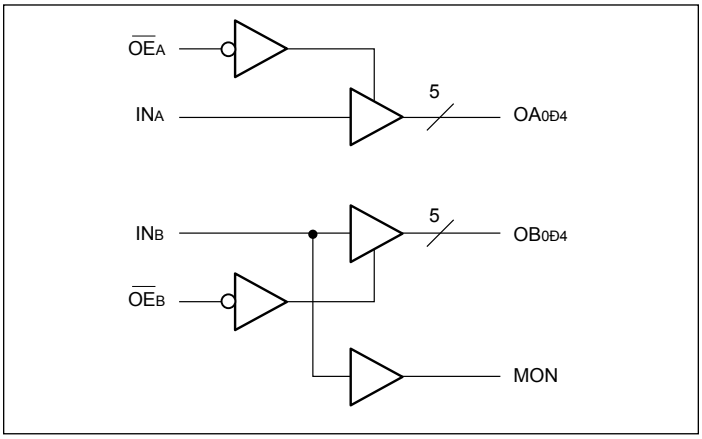

Truth Table[1]

Inputs		Outputs	
$\overline{OE}_X$	IN_X	OA_X	MON
L	L	L	L
L	H	H	H
H	L	Z	L
H	H	Z	H

Note:
1. H = High Voltage Level, L = Low Voltage Level, Z = High Impedance

Notes:
1. No purposely added lead. Fully EU Directive 2002/95/EC (RoHS), 2011/65/EU (RoHS 2) & 2015/863/EU (RoHS 3) compliant.
2. See https://www.diodes.com/quality/lead-free/ for more information about Diodes Incorporated's definitions of Halogen- and Antimony-free, "Green" and Lead-free.
3. Halogen- and Antimony-free "Green" products are defined as those which contain <900ppm bromine, <900ppm chlorine (<1500ppm total Br + Cl) and <1000ppm antimony compounds.

Downloaded from Arrow.com.

Pin Configuration

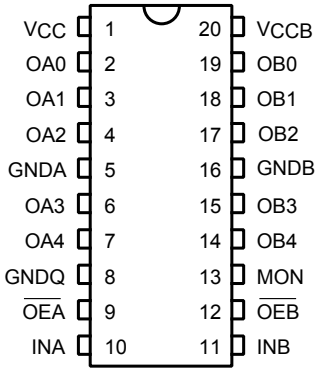

Pin Description

Pin Name	Description
$\overline{OE}_X$	Hi-Z State Output Enable Inputs (Active Low)
IN_X	Clock Inputs
OA_N, OB_N	Clock Outputs
MON	Monitor Output
GND	Ground
V_{CC}	Power

Downloaded from Arrow.com.

Maximum Ratings

(Above which the useful life may be impaired. For user guidelines, not tested.)

Storage Temperature	–65°C to +150°C
Ambient Temperature with Power Applied	–40°C to +85°C
Input Voltage to GND Potential (Inputs & V_{CC} Only)	–0.5V to 5.5V
Output Voltage to GND Potential (Outputs & I/O Only)	–0.5V to +V_{CC} +0.5V
V_{CC} Input Voltage	–0.5V to +4.6V

Note:
Stresses greater than those listed under MAXIMUM RATINGS may cause permanent damage to the device. This is a stress rating only and functional operation of the device at these or any other conditions above those indicated in the operational sections of this specification is not implied. Exposure to absolute maximum rating conditions for extended periods may affect reliability.

DC Electrical Characteristics (T_A = –40°C to +85°C, V_{CC} = 3.3V ± 0.3V)

Symbol	Parameters	Test Conditions[1]		Min.	Typ.	Max.	Units
V_{OH}	Output High Voltage V_{CC} = Min., V_{IN} = V_{IL} or V_{IH}	I_{OH} = -0.1mA I_{OH} = -8mA I_{OH} = -12mA		V_{CC}-0.2 2.4[3] 2.4[3]	- 3.0 3.0		V
V_{OL}	Output Low Voltage V_{CC} = Min., V_{IN} = V_{IL} or V_{IH}	I_{OH} = 0.1mA I_{OH} = 8mA I_{OH} = 12mA			- 0.2 0.3	0.2 0.4 0.4	V
V_{IH}	Input High Voltage	Low Logic		2.0		5.5	V
V_{IL}	Input Low Voltage	High Logic		-0.5		0.8	V
I_{IH}	Input High Current	V_{CC} = Max., V_{IN} = 5.5V				1	µA
I_{IL}	Input Low Current	V_{CC} = Max., V_{IN} = GND				-1	µA
I_{OZH} I_{OZL}	High Impedance output current	V_{CC} = Max., all outputs disabled	V_{OUT} = V_{CC} V_{OUT} = GND			1 -1	µA
V_{IK}	Clamp Diode Voltage	V_{CC} = Min., I_{IN} = -18mA			-0.7	-1.2	V
I_{ODH}	Output High Current[4, 5]	V_{OUT} = 1.5V, V_{IN} = V_{IL} or V_{IH}, V_{CC} = 3.3V		-40	-74	-100	mA
I_{ODL}	Output Low Current[4, 5]	V_{OUT} = 1.5V, V_{IN} = V_{IL} or V_{IH}, V_{CC} = 3.3V		50	90	130	mA
I_{OS}	Short Circuit Current[4, 5]	V_{CC} = Max., V_{OUT} = GND		-60	-100	-120	mA

Notes:
1. For Max. or Min. conditions, use appropriate value specified under Electrical Characteristics for the applicable device type.
2. Typical values are at V_{CC} = 3.3V, +25°C ambient and maximum loading.
3. V_{OH} = V_{CC} – 0.6V at rated current.
4. This parameter is determined by device characterization but is not production tested.
5. Not more than one output should be shorted at one time. Duration of the test should not exceed one second.

Capacitance (T_A = 25°C, f = 1 MHz)

Parameters[1]	Description	Test Conditions	Typ	Max.	Units
C_{IN}	Input Capacitance	V_{IN} = 0V	3.0	4	pF
C_{OUT}	Output Capacitance	V_{OUT} = 0V	—	6	pF

Note:
1. This parameter is determined by device characterization but is not production tested.

Downloaded from Arrow.com.

Power Supply Characteristics

Parameters	Description	Test Conditions[1]		Min.	Typ.[2]	Max.	Units
I_{CC}	Quiescent Power Supply Current	V_{CC} = Max.	V_{IN} = GND or V_{DD}		0.1	30	µA
I_{DD}	Dynamic Supply Current per Output	V_{CC} = 3.6V, C_L = 15pF, All Outputs Toggling			80	120	
I_C	Total Power Supply Current	V_{CC} = 3.6V, C_L = 15pF, All Outputs Toggling, f_i = 133 MHz	V_{IN} = V_{CC} or GND		100	135	mA/MHz
			V_{IN} = V_{CC} -0.6V or GND		100	135	
		V_{CC} = 3.6V, C_L = 15pF, All Outputs Toggling, f_i = 166 MHz	V_{IN} = V_{CC} or GND		120	160	
			V_{IN} = V_{CC} -0.6V or GND		120	160	
ΔI_{CC}	Supply Current per inputs @ TTL High	V_{CC} = Max.	V_{IN} = V_{CC} -0.6V[3]		45	300	µA

Notes:

1. For Max. or Min. conditions, use appropriate value specified under Electrical Characteristics for the applicable device.
2. Typical values are at V_{CC} = 3.3V, +25°C ambient.
3. Per TTL driven input (V_{IN} = V_{CC} – 0.6V); all other inputs at V_{CC} or GND.

Downloaded from Arrow.com.

Switching Characteristics over Operating Range

Parameters	Description	Test Conditions(1)	3805D Max.	Units
t_{PLH} t_{PHL}	Propagation Delay IN_N to O_N	C_L = 15pF, 133 MHz (3805D)	3.0	ns
t_R/t_F	CLKn Rist/Fall Time 0.8V ~ 2.0V		1.5	ns
$t_{SK(o)}$(3)	Pulse Skew		270	ps
$t_{SK(p)}$(3)	Output Skew		270	
$t_{SK(t)}$(3)	Package Skew		550	
t_{ZL}, t_{ZH}, t_{LZ}, t_{HZ}	Enable/Disable Time		5.2	ns
F_{MAX}	Input Frequency		133	MHz

Note:

1. These parameters are guaranteed by design
2. Series Resistor loading = 33Ω (See Test Circuit)

Switch Position

Test	Switch
Disable LOW Enable LOW	6V
Disable HIGH Enable HIGH	GND
All Other Inputs	Open

Definitions:

1. C_L = Load capacitance: includes jig and probe capacitance.
2. R_T = Termination resistance: should be equal to Z_{OUT} of the Pulse Generator.

Tests Circuit

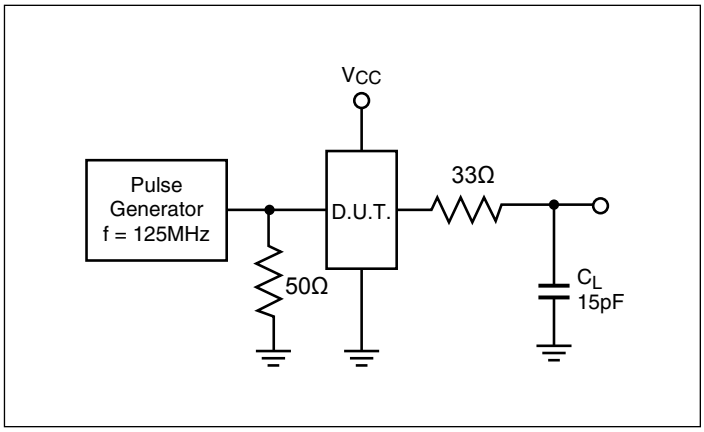

Enable/Disable Time Test Set-Up

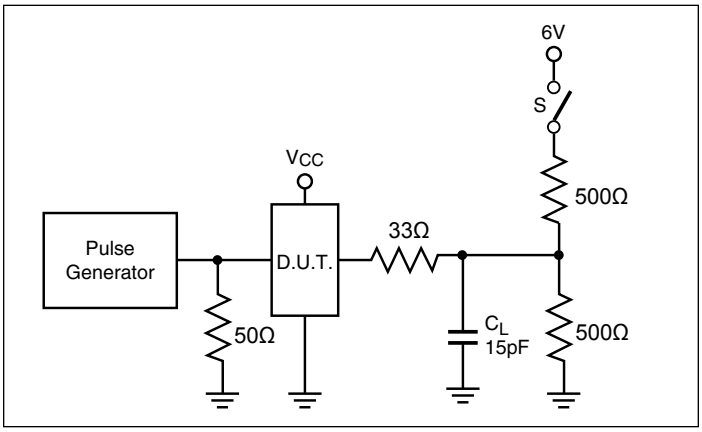

Downloaded from Arrow.com.

Switching Waveforms

Propagation Delay

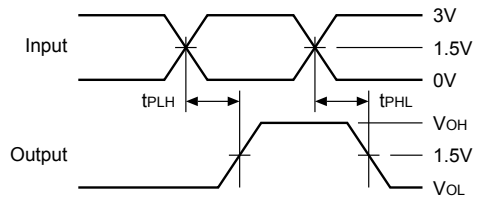

Enable and Disable Times

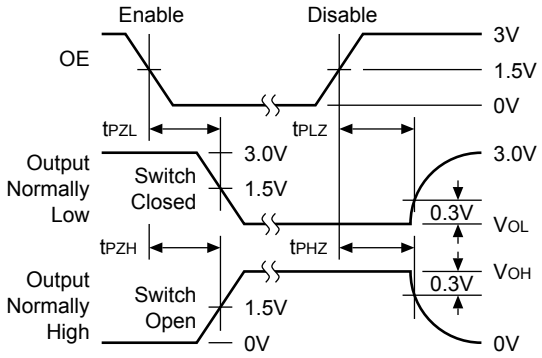

Package Skew – $t_{SK(t)}$

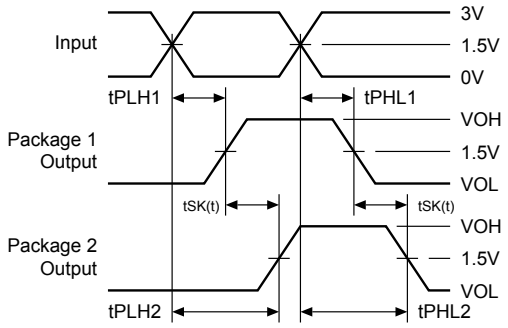

tSK(t) = | tPLH2 Ð tPLH1 | or | tPHL2 Ð tPHL1 |

Output Skew – $t_{SK(o)}$

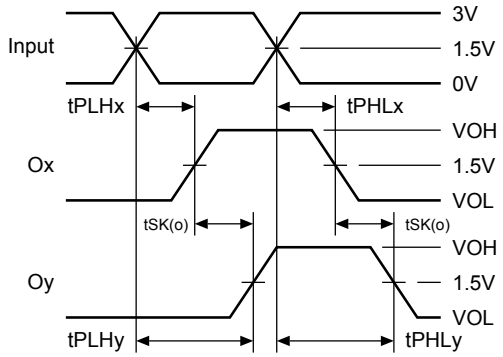

tSK(o) = | tPLHy Ð tPLHx | or | tPHLy Ð tPHLx |

Pulse Skew – $t_{SK(p)}$

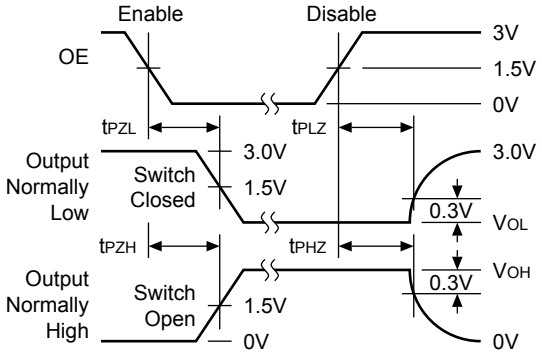

Downloaded from Arrow.com.

Part Marking

H Package

YY: Year
WW: Workweek
1st X: Assembly Code
2nd X: Fab Code

Q Package

YY: Year
WW: Workweek
1st X: Assembly Code
2nd X: Fab Code

Downloaded from Arrow.com.

Packaging Mechanical: 20-SSOP (H)

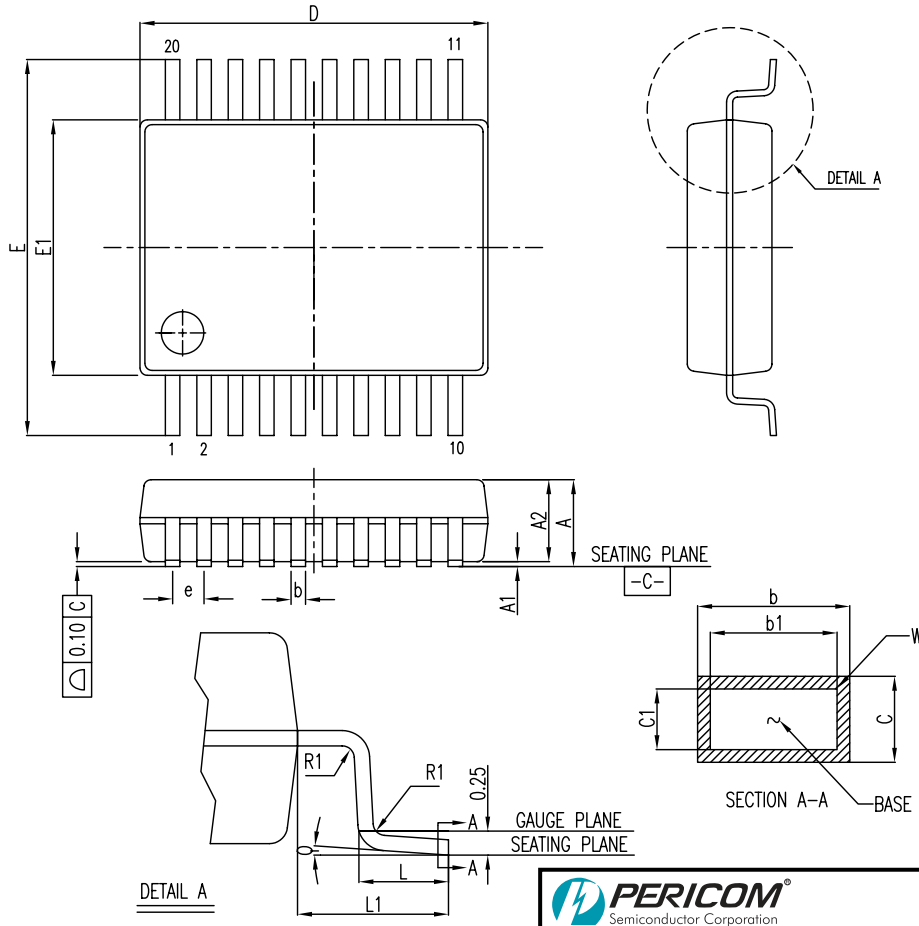

SYMBOL	COMMON DIMENSION MILLIMETERS		
	MIN.	NOM.	MAX.
A	--	--	2.0
A1	0.05	--	--
A2	1.65	1.75	1.85
b	0.22	--	0.38
b1	0.22	0.30	0.33
c	0.09	--	0.25
c1	0.09	0.15	0.21
E	7.40	7.80	8.20
E1	5.00	5.30	5.60
D	6.90	7.20	7.50
e	0.65 BSC		
L	0.55	0.75	0.95
L1	1.25 REF.		
R1	0.09	--	--
θ	0°	4°	8°

NOTE:
1. Controlling dimensions in millimeters
2. Ref.: JEDEC MO-150B/AE
3. Package Outline Exclusive of Mold Flash and Metal Burr

PERICOM Semiconductor Corporation

DATE: 10/31/13

DESCRIPTION: 20-Pin, 209-Mil Wide, SSOP

PACKAGE CODE: H20

DOCUMENT CONTROL #: PD-1240 REVISION: F

13-0214

Downloaded from Arrow.com.

Packaging Mechanical: 20-QSOP (Q)

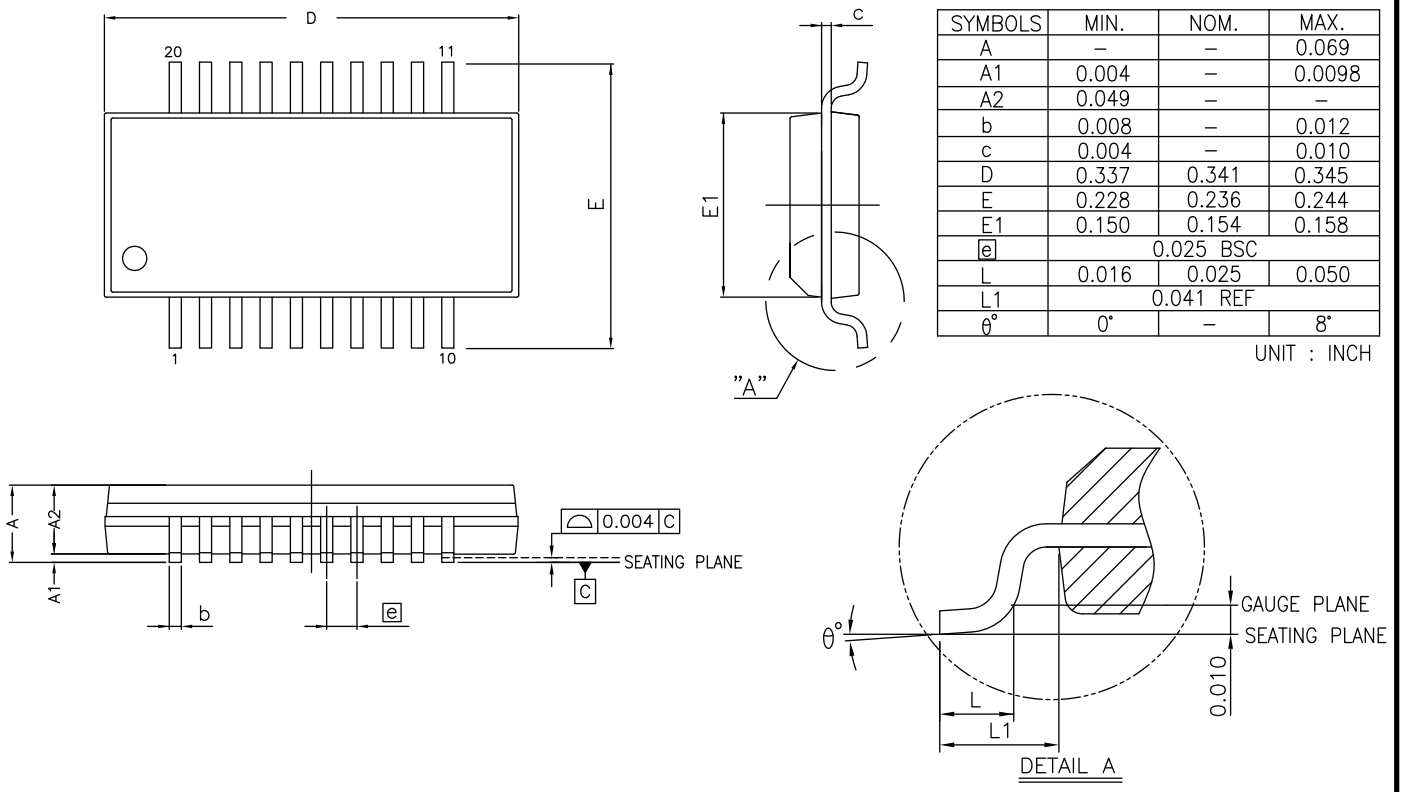

SYMBOLS	MIN.	NOM.	MAX.
A	–	–	0.069
A1	0.004	–	0.0098
A2	0.049	–	–
b	0.008	–	0.012
c	0.004	–	0.010
D	0.337	0.341	0.345
E	0.228	0.236	0.244
E1	0.150	0.154	0.158
e	0.025 BSC		
L	0.016	0.025	0.050
L1	0.041 REF		
θ°	0°	–	8°

UNIT : INCH

NOTES:
1. ALL DIMENSIONS IN INCH. ANGLES IN DEGREES.
2. JEDEC MO–137E
3. DIMENSIONS DOES NOT INCLUDE MOLD FLASH, PROTRUSIONS OR GATE BURRS.

PERICOM Enabling Serial Connectivity

DATE: 03/24/16

DESCRIPTION: 20-Pin, 150mil Wide QSOP

PACKAGE CODE: Q (Q20)

DOCUMENT CONTROL #: PD-1202 REVISION: I

16-0057

For latest package info.

please check: http://www.diodes.com/design/support/packaging/pericom-packaging/packaging-mechanicals-and-thermal-characteristics/

Ordering Information

Ordering Code	Package Code	Package Description
PI49FCT3805DHEX	H	20-pin, 209-mil Wide (SSOP)
PI49FCT3805DQEX	Q	20-pin, 150-mil Wide (QSOP)

Notes:

1. No purposely added lead. Fully EU Directive 2002/95/EC (RoHS), 2011/65/EU (RoHS 2) & 2015/863/EU (RoHS 3) compliant.
2. See https://www.diodes.com/quality/lead-free/ for more information about Diodes Incorporated's definitions of Halogen- and Antimony-free, "Green" and Lead-free.
3. Halogen- and Antimony-free "Green" products are defined as those which contain <900ppm bromine, <900ppm chlorine (<1500ppm total Br + Cl) and <1000ppm antimony compounds.
4. E = Pb-free and Green
5. X suffix = Tape/Reel

Downloaded from Arrow.com.

IMPORTANT NOTICE

1. DIODES INCORPORATED AND ITS SUBSIDIARIES ("DIODES") MAKE NO WARRANTY OF ANY KIND, EXPRESS OR IMPLIED, WITH REGARDS TO ANY INFORMATION CONTAINED IN THIS DOCUMENT, INCLUDING, BUT NOT LIMITED TO, THE IMPLIED WARRANTIES OF MERCHANTABILITY, FITNESS FOR A PARTICULAR PURPOSE OR NON-INFRINGEMENT OF THIRD PARTY INTELLECTUAL PROPERTY RIGHTS (AND THEIR EQUIVALENTS UNDER THE LAWS OF ANY JURISDICTION).

2. The Information contained herein is for informational purpose only and is provided only to illustrate the operation of Diodes products described herein and application examples. Diodes does not assume any liability arising out of the application or use of this document or any product described herein. This document is intended for skilled and technically trained engineering customers and users who design with Diodes products. Diodes products may be used to facilitate safety-related applications; however, in all instances customers and users are responsible for (a) selecting the appropriate Diodes products for their applications, (b) evaluating the suitability of the Diodes products for their intended applications, (c) ensuring their applications, which incorporate Diodes products, comply the applicable legal and regulatory requirements as well as safety and functional-safety related standards, and (d) ensuring they design with appropriate safeguards (including testing, validation, quality control techniques, redundancy, malfunction prevention, and appropriate treatment for aging degradation) to minimize the risks associated with their applications.

3. Diodes assumes no liability for any application-related information, support, assistance or feedback that may be provided by Diodes from time to time. Any customer or user of this document or products described herein will assume all risks and liabilities associated with such use, and will hold Diodes and all companies whose products are represented herein or on Diodes' websites, harmless against all damages and liabilities.

4. Products described herein may be covered by one or more United States, international or foreign patents and pending patent applications. Product names and markings noted herein may also be covered by one or more United States, international or foreign trademarks and trademark applications. Diodes does not convey any license under any of its intellectual property rights or the rights of any third parties (including third parties whose products and services may be described in this document or on Diodes' website) under this document.

5. Diodes products are provided subject to Diodes' Standard Terms and Conditions of Sale (https://www.diodes.com/about/company/terms-and-conditions/terms-and-conditions-of-sales/) or other applicable terms. This document does not alter or expand the applicable warranties provided by Diodes. Diodes does not warrant or accept any liability whatsoever in respect of any products purchased through unauthorized sales channel.

6. Diodes products and technology may not be used for or incorporated into any products or systems whose manufacture, use or sale is prohibited under any applicable laws and regulations. Should customers or users use Diodes products in contravention of any applicable laws or regulations, or for any unintended or unauthorized application, customers and users will (a) be solely responsible for any damages, losses or penalties arising in connection therewith or as a result thereof, and (b) indemnify and hold Diodes and its representatives and agents harmless against any and all claims, damages, expenses, and attorney fees arising out of, directly or indirectly, any claim relating to any noncompliance with the applicable laws and regulations, as well as any unintended or unauthorized application.

7. While efforts have been made to ensure the information contained in this document is accurate, complete and current, it may contain technical inaccuracies, omissions and typographical errors. Diodes does not warrant that information contained in this document is error-free and Diodes is under no obligation to update or otherwise correct this information. Notwithstanding the foregoing, Diodes reserves the right to make modifications, enhancements, improvements, corrections or other changes without further notice to this document and any product described herein. This document is written in English but may be translated into multiple languages for reference. Only the English version of this document is the final and determinative format released by Diodes.

8. Any unauthorized copying, modification, distribution, transmission, display or other use of this document (or any portion hereof) is prohibited. Diodes assumes no responsibility for any losses incurred by the customers or users or any third parties arising from any such unauthorized use.

Copyright © 2021 Diodes Incorporated

www.diodes.com

Downloaded from Arrow.com.