A
board drillings

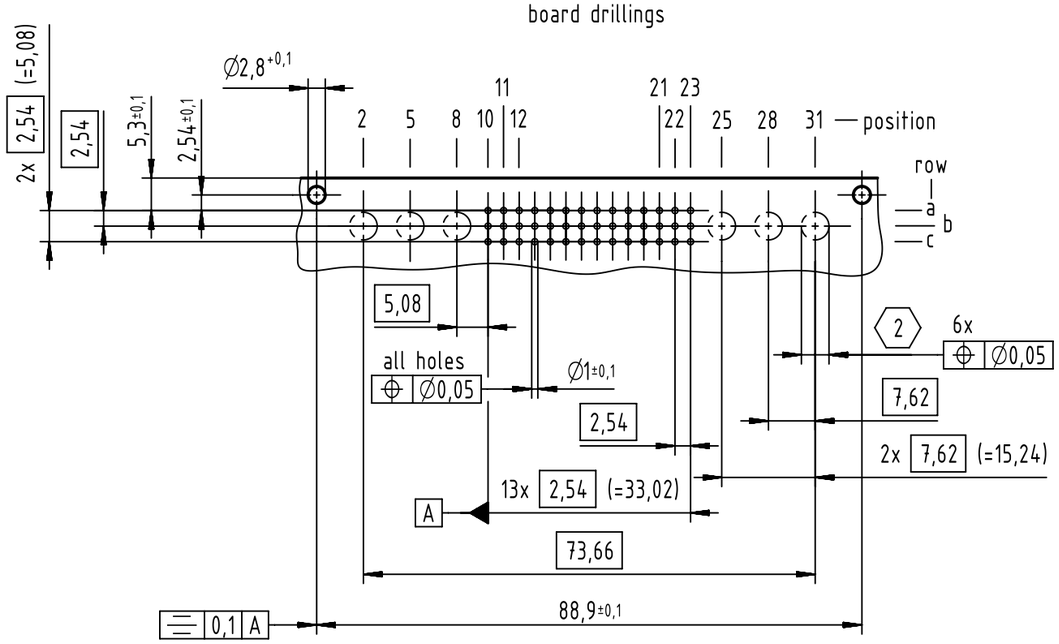

B
contact arrangement

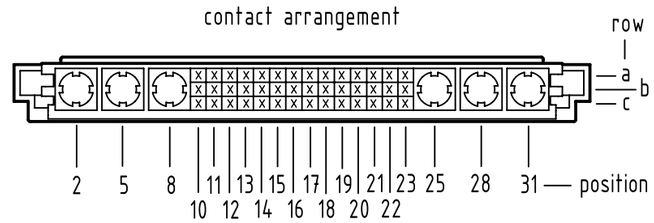

42 signal contacts

☒ = position with contact

☐ = position without contact

C-C (2:1)

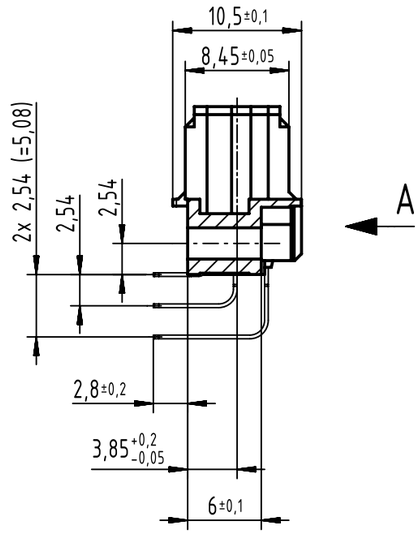

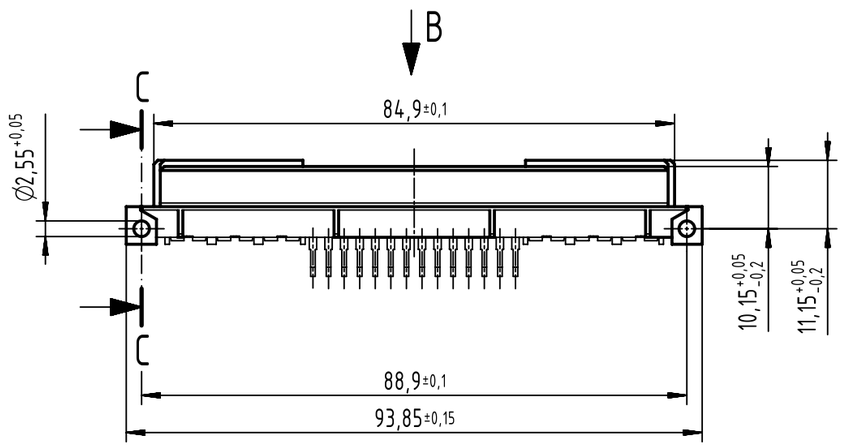

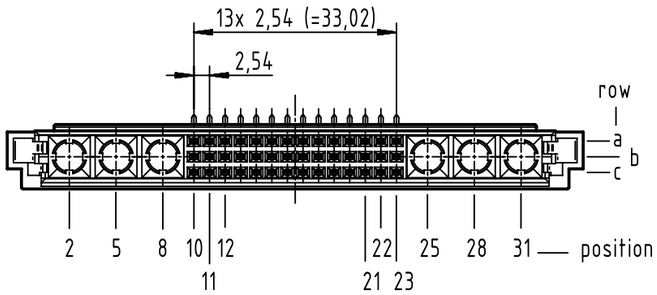

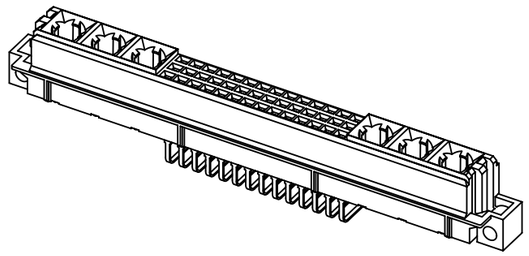

(2) hole diameter is to be coordinated with the respective contact

(1) further information see: DS 09732200203

part no.	performance level (1)
09732426801	2

All Dimensions in mm Original Size DIN A3	Scale 1:1	Free size tol. complementary IEC 60603-2		Ref. Sub. TB 0973242x801 / ECM 500000083791 / 2015-02-10
All rights reserved Department EC PD - DE	Created by HASELOH	Inspected by LUECKEMEIERM	Standardisation HOFFMANN	Date 2015-06-08 / State Final Release
HARTING Electronics GmbH D-32339 Espelkamp	Title DIN Signal type M42+6 invers female connector 42-pole			Doc-Key / ECM-Nr. 100542433/UGD/004/B 500000089713
	Type TB	Number 0973242X801	Rev. B	Page 1/1

Downloaded from Arrow.com.

A3