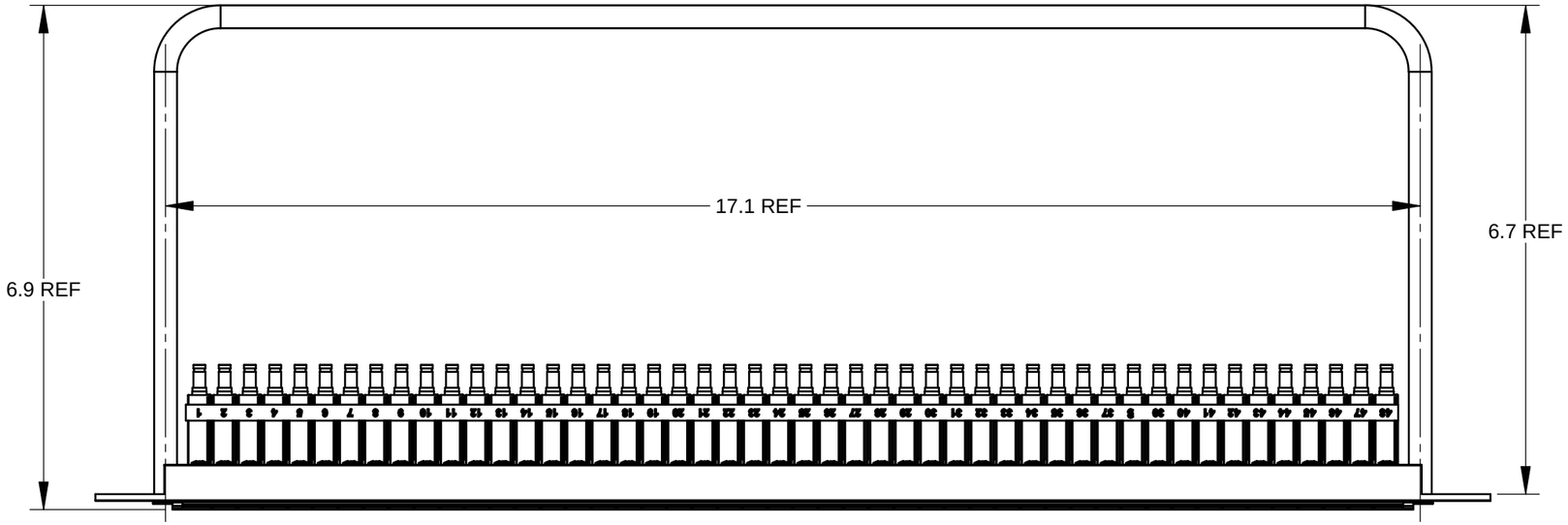

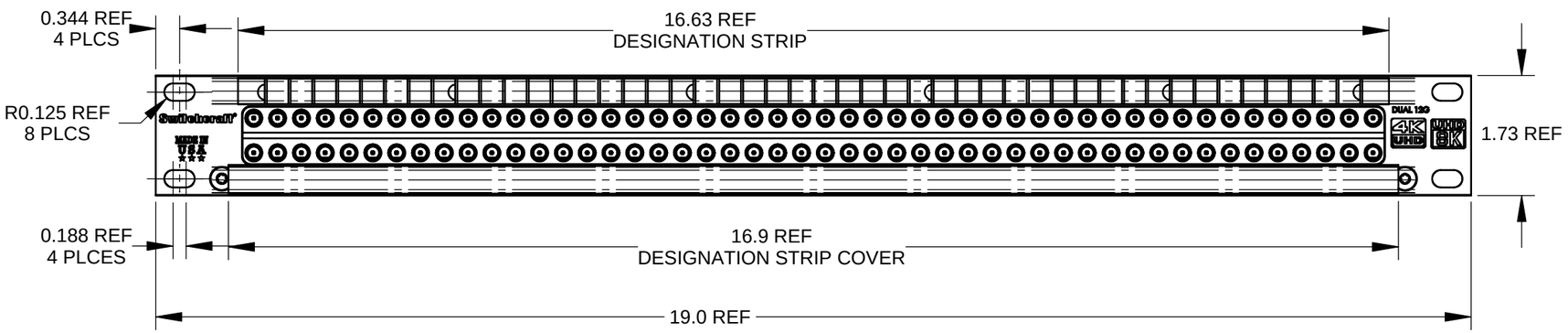

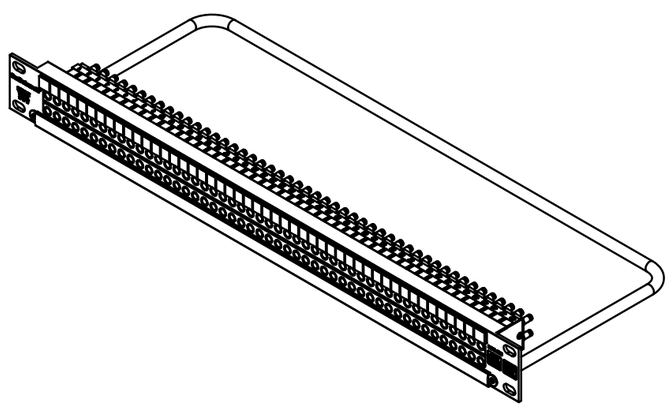

PRELIMINARY

NOTES:
1. SPECIFICATIONS:
   ELECTRICAL:
      MEETS SMPTE 2082-1
      CHARACTERISTIC IMPEDANCE: 75 OHMS
      CONTACT RESISTANCE: LESS THAN 50 MILLIOHMS
   INTERFACE:
      MATING PLUG: 0.175 OUTSIDE DIAMETER
      CENTER CONDUCTOR: ACCEPTS 0.029 PIN DIAMETER
   MECHANICAL:
      VIBRATION: PER MIL - STD 202, METHOD 201
      INSERTION FORCE: 9 LBS MAX.
      WITHDRAWAL FORCE: 2 LBS MIN.
      LIFE CYCLE: 20,000 MIN.
   ENVIRONMENTAL:
      TEMPERATURE
         OPERATING: -40 °C TO 65 °C
         STORAGE: -40 °C TO 65 °C
      THERMAL SHOCK: PER MIL-STD- 202, METHOD 107
      MOISTURE AND HUMIDITY: PER MIL-STD- 202, METHOD 106
      SALT SPRAY: PER MIL-STD- 202, METHOD 101

2. USE UHDDIN94 (4594R CABLE) AND VMMPUHD PATCHCORDS OR VMMLPUHD LOOPING PLUGS TO MEET SMPTE 2082-1.

3. THIS PRODUCT IS RoHS COMPLIANT.

CUSTOMER DRAWING

PART NUMBER	DESCRIPTION	REVISION
MMVPD48K175T	NORMAL-TERMINATED	0C
MMVPD48K1NNT	NON-NORMAL-NON-TERMINATED	0C

REV	ECO NUMBER	DATE	BY	APVD
0C	ADDED REAR LABEL	1-23-19	SRC	SRC
0B	CORRECTED PART #S IN TABLE	1-14-19	SRC	SRC

REVISIONS

☆ STAR SYMBOL DENOTES CRITICAL DIMENSION

UNLESS OTHERWISE SPECIFIED
1. ALL DIMENSIONS IN INCHES
   - TWO PLACE DECIMALS ±0.01
   - THREE PLACE DECIMALS ±0.005
   - ANGLES ±1°
   - ALL DIA. CONCENTRIC WITHIN 0.005 T.I.R.
2. FEATURES ON THE SAME CENTERLINE MUST BE ALIGNED WITHIN ±0.002
3. REMOVE ALL BURRS

DO NOT SCALE DRAWING

THIS DRAWING DESCRIBES A DESIGN CONSIDERED PROPRIETARY IN NATURE, DEVELOPED AND MANUFACTURED BY SWITCHCRAFT INC. AND IS RELEASED ON A CONFIDENTIAL BASIS FOR IDENTIFICATION PURPOSES ONLY.

SIZE	WIDTH	MULT	LBS/M	TEMPER

FINISH
SPEC No.
MATERIAL *
SPEC No. *
FIRST USED ON
SCALE 1:2

DATE DRAWN	BY	CHKD	APVD
1-11-19	SRC	1-11-19 SRC	* *

Switchcraft®

SHEET 1 OF 1

NAME MICRO-DIN-REAR PATCHBAYS

PART No. MMVPD481K_SERIES

REV 0C

SolidWorks CAD File B

ROUTING 146 112

Downloaded from Arrow.com.