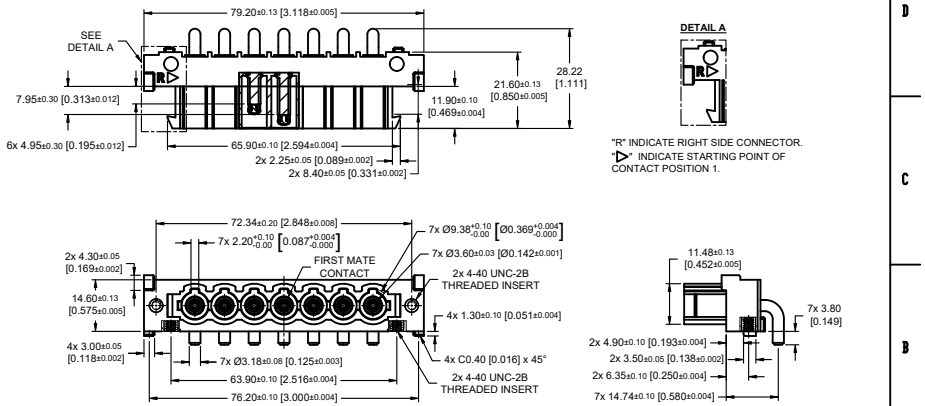

"R" INDICATE RIGHT SIDE CONNECTOR.
"▷" INDICATE STARTING POINT OF CONTACT POSITION 1.

NOTES:

1) MATERIALS AND FINISHES:
   INSULATOR : GLASS-FILLED POLYESTER, UL 94V-0. COLOR: BLUE. (HALOGEN-FREE)
   POWER CONTACTS: HIGH CONDUCTIVITY COPPER ALLOY WITH GOLD FLASH OVER NICKEL PLATE.
   THREADED INSERT: COPPER ALLOY.
2) COMPLIANT TO THE CURRENT ROHS DIRECTIVE.
3) THIS MOS ALLOWS FOR THE CONNECTOR TO BE SUPPLIED WITH SPECIAL CONTACTS AND CONTACT MODULES WHICH ALLOWS FOR TOUCH SAFE FEATURE.
   THIS MOS ALSO ALLOWS FOR FIRST MATE CONTACT TO BE LOADED IN THE CENTRE CONTACT POSITION OF THE CONNECTOR.
4) RECOMMENDED WIPE LENGTH FOR 1ST MATE IS 7MM AND STANDARD MATE IS 4MM.

JH	JH		Positronic
EH	25-02-2022	NTS	SP10RSSS40M220A1/AA-2269 SP
			MALE CONNECTOR - RIGHT
		24-02-2022	SHEET 1 OF 2 F

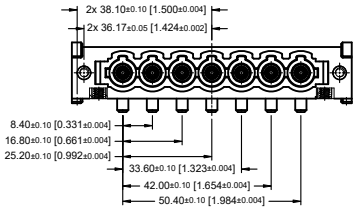

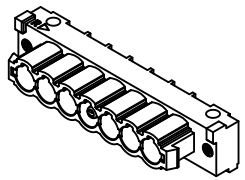

PCB CONTACT HOLE PATTERN

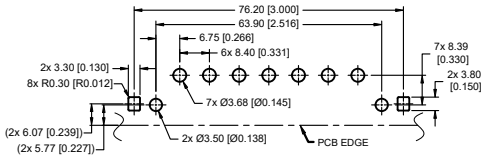

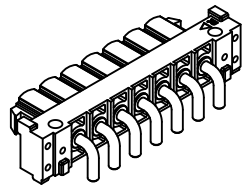

PANEL CUTOUT
(GENERAL TOLERANCE: ±0.13 [±0.005])

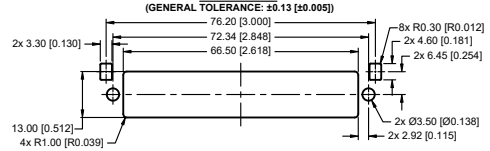

	SP10RSSS40M220A1/AA-2269	SP
NTS	MALE CONNECTOR - RIGHT	
	24-02-2022	SHEET 2 OF 2 F

Downloaded from Arrow.com.