SERIES: PEM2-S | DESCRIPTION: DC-DC CONVERTER

FEATURES

- 2 W isolated output
- smaller package
- single/dual unregulated output
- 3,000 Vdc isolation
- short circuit protection
- extended temperature range (-40~105°C)
- antistatic protection up to 8kV
- high efficiency at light load
- efficiency up to 86%
- designed to meet EN/BS EN 62368

MODEL	input voltage		output voltage	output current		output power	ripple and noise[2]	efficiency
	typ (Vdc)	range (Vdc)	(Vdc)	min (mA)	max (mA)	max (W)	typ (mVp-p)	typ (%)
PEM2-S5-S5-S[1,*]	5	4.5~5.5	5	40	400	2	75	82
PEM2-S5-S12-S[1,*]	5	4.5~5.5	12	17	167	2	75	82
PEM2-S5-S15-S[1,*]	5	4.5~5.5	15	13	133	2	75	83
PEM2-S5-S24-S[1,*]	5	4.5~5.5	24	8	83	2	75	84
PEM2-S5-D5-S[1,*]	5	4.5~5.5	±5	±20	±200	2	75	80
PEM2-S5-D12-S[1,*]	5	4.5~5.5	±12	±8	±83	2	75	83
PEM2-S5-D15-S[1,*]	5	4.5~5.5	±15	±7	±67	2	75	82
PEM2-S5-D24-S[1,*]	5	4.5~5.5	±24	±4	±42	2	75	84
PEM2-S12-S5-S[1,*]	12	10.8~13.2	5	40	400	2	75	82
PEM2-S12-S12-S[1,*]	12	10.8~13.2	12	17	167	2	75	84
PEM2-S12-S15-S[1, *]	12	10.8~13.2	15	13	133	2	75	85
PEM2-S12-D5-S[1,*]	12	10.8~13.2	±5	±20	±200	2	75	80
PEM2-S12-D12-S[1,*]	12	10.8~13.2	±12	±8	±83	2	75	84
PEM2-S12-D15-S[1, *]	12	10.8~13.2	±15	±7	±67	2	75	84
PEM2-S15-S5-S*	15	13.5~16.5	5	40	400	2	75	80
PEM2-S15-D15-S	15	13.5~16.5	±15	±7	±67	2	75	84
PEM2-S24-S5-S[1,*]	24	21.6~26.4	5	40	400	2	75	80
PEM2-S24-S12-S[1,*]	24	21.6~26.4	12	17	167	2	75	84
PEM2-S24-S15-S[1,*]	24	21.6~26.4	15	13	133	2	75	86
PEM2-S24-S24-S[1]	24	21.6~26.4	24	8	83	2	75	86
PEM2-S24-D5-S[1,*]	24	21.6~26.4	±5	±20	±200	2	75	80
PEM2-S24-D12-S[1,*]	24	21.6~26.4	±12	±8	±83	2	75	84
PEM2-S24-D15-S[1,*]	24	21.6~26.4	±15	±7	±67	2	75	84

Notes:
1. Model is UL approved.
2. Ripple and noise are measured at 20 MHz BW by "parallel cable" method with 1 μF ceramic and 10 μF electrolytic capacitors on the output.
3. * Discontinued model.

Please read our datasheet & drawing disclaimer here.
Downloaded from Arrow.com.

PART NUMBER KEY

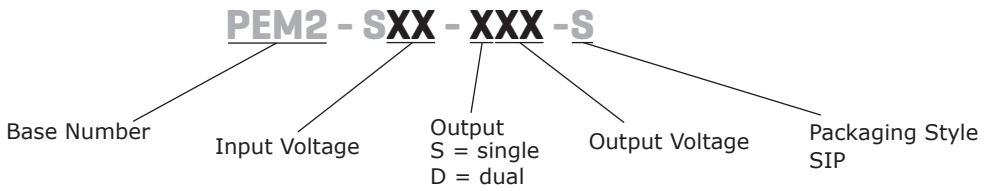

INPUT

parameter	conditions/description	min	typ	max	units
operating input voltage	5 Vdc input models	4.5	5	5.5	Vdc
	12 Vdc input models	10.8	12	13.2	Vdc
	15 Vdc input models	13.5	15	16.5	Vdc
	24 Vdc input models	21.6	24	26.4	Vdc
surge voltage	for maximum of 1 second				
	5 Vdc input models	-0.7		9	Vdc
	12 Vdc input models	-0.7		18	Vdc
	15 Vdc input models	-0.7		21	Vdc
	24 Vdc input models	-0.7		30	Vdc
filter	capacitance filter				

OUTPUT

parameter	conditions/description	min	typ	max	units
line regulation	for Vin change of 1%			±1.2	%
load regulation	measured from 10% load to full load				
	5 Vdc output models		12		%
	12 Vdc output models		8		%
	15 Vdc output models		7		%
	24 Vdc output models		6		%
voltage accuracy	see tolerance envelope curves				
voltage balance	dual output, balanced loads		±0.5	±1	%
switching frequency	100% load, nominal input voltage		100		kHz
temperature coefficient	100% load			±0.03	%/°C

PROTECTIONS

parameter	conditions/description	min	typ	max	units
short circuit protection[1]	12, 15, & 24 Vdc input models; PEM2-S5-S24-S, PEM2-S5-D24-S all other models: continuous, automatic recovery			1	s

Notes: 1. The supply voltage must be discontinued at the end of the short circuit duration

SAFETY AND COMPLIANCE

parameter	conditions/description	min	typ	max	units
isolation voltage	input to output, for 1 minute at 1 mA max.	3,000			Vdc
isolation resistance	input to output, at 500 Vdc	1,000			MΩ
safety approvals[2]	certified to 60950-1: UL designed to meet 62368: EN/BS EN				
conducted/radiated emissions	CISPR32/EN55032 class B (external circuit required, see Figure 1)				
ESD	IEC/EN61000-4-2, class B, contact ± 8kV for single outputs IEC/EN61000-4-2, class B, contact ± 6kV for dual outputs				
MTBF	as per MIL-HDBK-217F @ 25°C	3,500,000			hours
RoHS	2011/65/EU				

Notes: 2. See specific models noted on page 1

Downloaded from Arrow.com.

ENVIRONMENTAL

parameter	conditions/description	min	typ	max	units
operating temperature	see derating curve	-40		105	°C
storage temperature		-55		125	°C
storage humidity	non-condensing			95	%
temperature rise	at full load, Ta = 25°C		25		°C

SOLDERABILITY

parameter	conditions/description	min	typ	max	units
hand soldering	1.5 mm from case for 10 seconds			300	°C
wave soldering[1]	see wave soldering profile			260	°C

Notes: 1. Preheat conditions: At 120°C for over 1 minute.

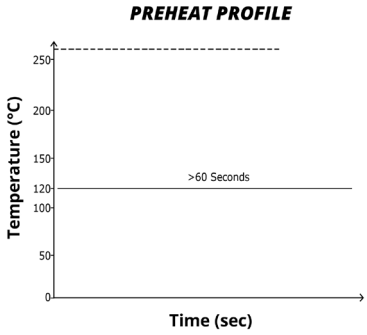

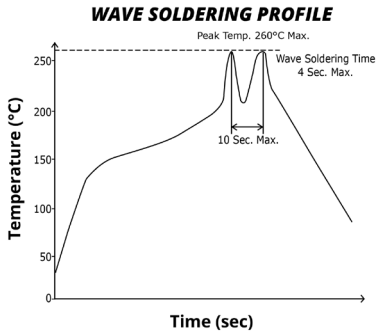

MECHANICAL

parameter	conditions/description	min	typ	max	units
dimensions	19.65 x 7.05 x 10.16 (0.774 x 0.278 x 0.400 inch)				mm
case material	plastic (UL94-V0)				
weight			2.4		g

MECHANICAL DRAWING

units: mm[inch]
tolerance: ±0.25[±0.010]
pin section tolerance: ±0.10[±0.004]

PIN CONNECTIONS		
PIN	Single Output	Dual Output
1	Vin	Vin
2	GND	GND
5	0V	-Vo
6	No Pin	0V
7	+Vo	+Vo

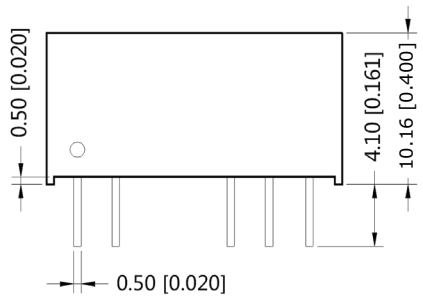

Front View

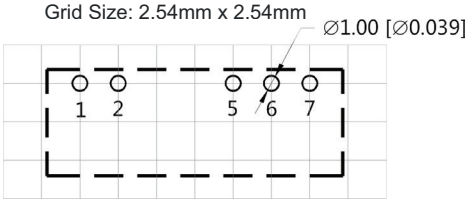

PCB Layout
Top View

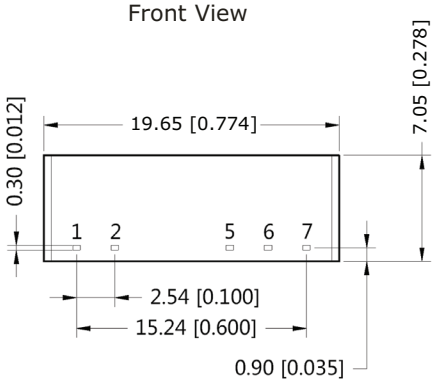

Bottom View

Downloaded from Arrow.com.

DERATING CURVES

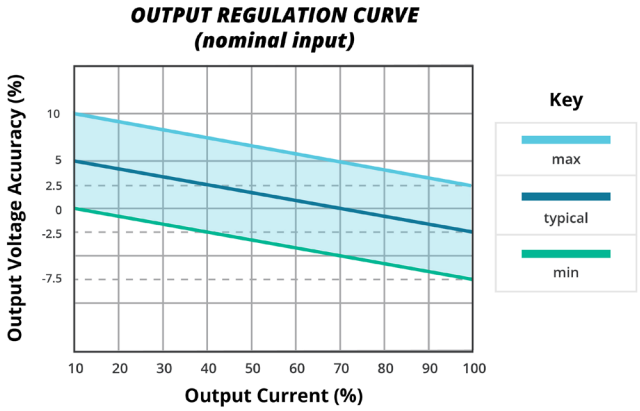

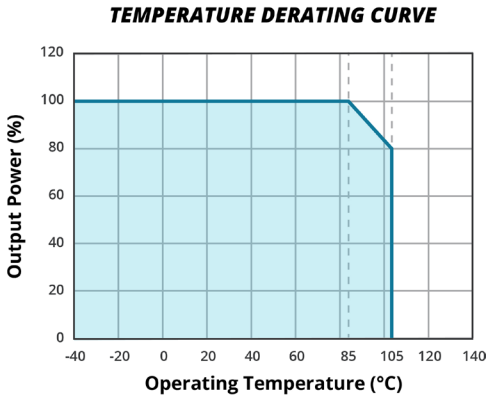

EMC RECOMMENDED CIRCUIT

Figure 1

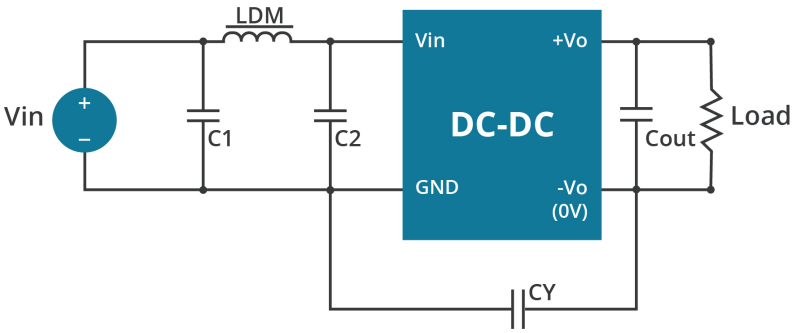

Table 1

Recommended external circuit components			
Vin (Vdc)	C1, C2	CY	LDM
5	4.7µF/50V	-	6.8µH
12	4.7µF/50V	-	6.8µH
15	4.7µF/50V	-	6.8µH
24	4.7µF/50V	1nF/3kV	6.8µH

Note: 1. See Table 3 for Cout values.

TEST CONFIGURATION

Figure 2

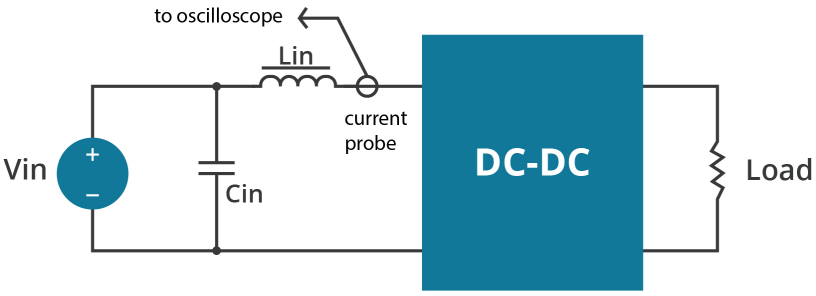

Table 2

External components	
Lin	4.7µH
Cin	220µF, ESR < 1.0Ω at 100 kHz

Note: Input reflected-ripple current is measured with an inductor Lin and Capacitor Cin to simulate source impedance.

Downloaded from Arrow.com.

APPLICATION NOTES

1. **Output load requirement**
   To ensure this module can operate efficiently and reliably, the minimum output load may not be less than 10% of the full load during operation. If the actual output power is low, connect a resistor at the output end in parallel to increase the load.

2. **Overload Protection**
   Under normal operating conditions, the output circuit of this product has no protection against overload. The simplest method to add this is to add a circuit breaker to the circuit.

3. **Recommended circuit**
   If you want to further decrease the input/output ripple, you can increase the capacitance accordingly or choose capacitors with low ESR (see Figure 3 & Table 3). However, the capacitance of the output filter capacitor must be appropriate. If the capacitance is too high, a startup problem might arise. For every channel of the output, to ensure safe and reliable operation, the maximum capacitance must be less than the maximum capacitive load (see Table 4).

Figure 3

Single Output

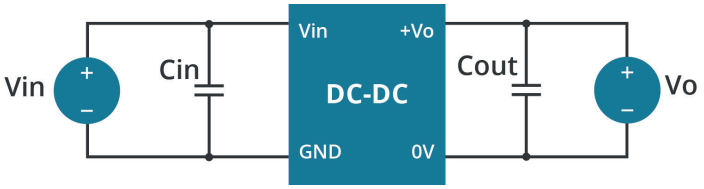

Dual Output

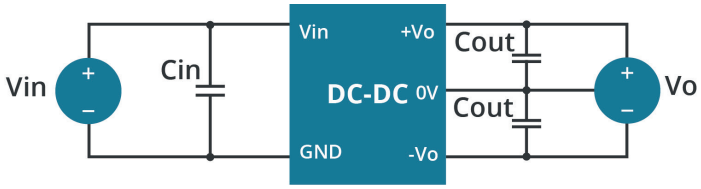

Table 3

Vin (Vdc)	Cin (μF)	Single Vo (Vdc)	Cout (μF)	Dual Vo (Vdc)	Cout (μF)
5	4.7	5	10	±5	4.7
12	2.2	12	2.2	±12	1
15	2.2	15	1	±15	0.47
24	1	24	1	±24	0.47

Table 4

Single Vout (Vdc)	Max. Capacitive Load (μF)	Dual Vout (Vdc)	Max. Capacitive Load[1] (μF)
5	220	5	100
12	220	12	100
15	220	15	100
24	220	24	100

Note: 1. For each output.

4. **Output Voltage Regulation and Over-voltage Protection Circuit**
   The device for output voltage regulation, over-voltage and over-current protection is a linear regulator and a capacitor filtering network with overheat protection, which can be connected to the input or output end in series (see Figure 4). The recommended capacitance of its filter capacitor (see Table 1), and the linear regulator is based on the actual voltage and current required.

Single Output

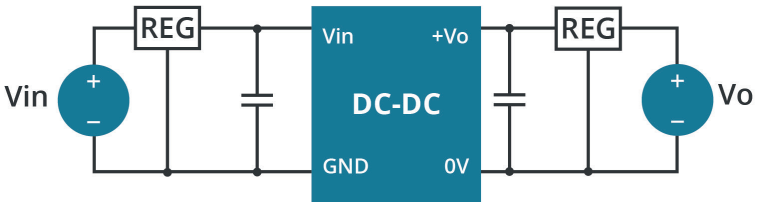

Figure 4

Dual Output

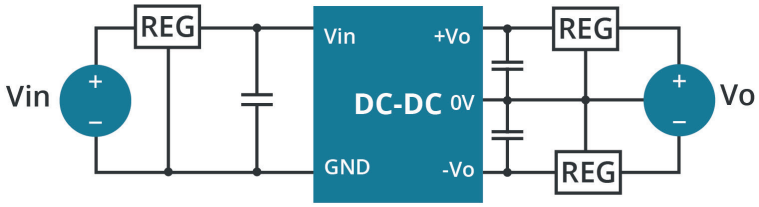

Note: 1. Operation under minimum load will not damage the converter; however, they may not meet all specifications listed.
2. Max. capacitive load tested at input voltage range and full load.
3. All specifications measured at: Ta=25°C, humidity<75%, nominal input voltage and rated output load, unless otherwise specified.

Downloaded from Arrow.com.

REVISION HISTORY

rev.	description	date
1.0	initial release	03/21/2013
1.01	added UL approval to some models, updated spec	02/26/2015
1.02	added model, updated emc recommendations, updated datasheet	11/19/2015
1.03	added packaging details	07/13/2017
1.04	added wave soldering preheat conditions	12/04/2017
1.05	corrected short circuit protection details	10/24/2018
1.06	transistor changed from Fairchild FSB560A to Diodes Inc part FMMT619TA	12/03/2018
1.07	safeties updated in features and safety approvals line, packaging removed	01/18/2021
1.08	derating curves and circuit figures updated	07/13/2021
1.09	discontinued models PEM2-S12-D15-S & PEM2-S12-S15-S	09/13/2022
1.10	CE certification updated	12/16/2022
1.11	discontinued models PEM2-S15-S5-S & PEM2-S5-S12-S	09/26/2023
1.12	discontinued models PEM2-S12-D12-SPEM2-S12-D5-S, PEM2-S12-S12-S, PEM2-S24-D12-S, PEM2-S24-D15-S, PEM2-S24-D5-S, PEM2-S24-S12-S, PEM2-S24-S15-S, PEM2-S24-S5-S, PEM2-S5-D12-S, PEM2-S5-D24-S, PEM2-S5-D5-S, PEM2-S5-S15-S & PEM2-S5-S24-S	01/12/2024
1.13	discontinued models PEM2-S12-S5-S, PEM2-S5-S5-S & PEM2-S5-D15-S	04/05/2024

The revision history provided is for informational purposes only and is believed to be accurate.

CUI INC
a bel group

Headquarters
20050 SW 112th Ave.
Tualatin, OR 97062
800.275.4899

Fax 503.612.2383
cui.com
techsupport@cui.com

CUI offers a two (2) year limited warranty. Complete warranty information is listed on our website.

CUI reserves the right to make changes to the product at any time without notice. Information provided by CUI is believed to be accurate and reliable. However, no responsibility is assumed by CUI for its use, nor for any infringements of patents or other rights of third parties which may result from its use.

CUI products are not authorized or warranted for use as critical components in equipment that requires an extremely high level of reliability. A critical component is any component of a life support device or system whose failure to perform can be reasonably expected to cause the failure of the life support device or system, or to affect its safety or effectiveness.

Downloaded from Arrow.com.