High Voltage PNP Silicon Plastic Power Transistors

MJE5730, MJE5731, MJE5731A

1.0 AMPERE POWER TRANSISTORS PCP SILICON 300–350–400 VOLTS 50 WATTS

These devices are designed for line operated audio output amplifier, switch–mode power supply drivers and other switching applications.

Features

- Popular TO–220 Plastic Package
- PNP Complements to the TIP47 thru TIP50 Series
- These Devices are Pb–Free and are RoHS Compliant*

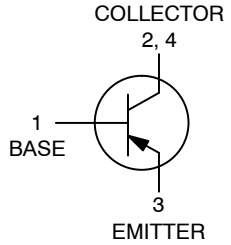

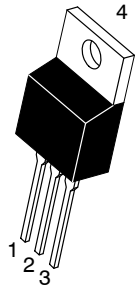

TO–220
CASE 221A–09
STYLE 1

MAXIMUM RATINGS

Rating	Symbol	Value	Unit
Collector–Emitter Voltage MJE5730 MJE5731 MJE5731A	V_{CEO}	 300 350 375	Vdc
Collector–Base Voltage MJE5730 MJE5731 MJE5731A	V_{CB}	 300 350 375	Vdc
Emitter–Base Voltage	V_{EB}	5.0	Vdc
Collector Current – Continuous	I_C	1.0	Adc
Collector Current – Peak	I_{CM}	3.0	Adc
Base Current	I_B	1.0	Adc
Total Device Dissipation @ T_C = 25°C Derate above 25°C	P_D	 40 0.32	 W W/°C
Total Device Dissipation @ T_C = 25°C Derate above 25°C	P_D	 2.0 0.016	 W W/°C
Unclamped Inducting Load Energy (See Figure 10)	E	20	mJ
Operating and Storage Junction Temperature Range	T_J, T_{stg}	–65 to +150	°C

Stresses exceeding those listed in the Maximum Ratings table may damage the device. If any of these limits are exceeded, device functionality should not be assumed, damage may occur and reliability may be affected.

THERMAL CHARACTERISTICS

Characteristics	Symbol	Max	Unit
Thermal Resistance, Junction–to–Case	$R_{\theta JC}$	3.125	°C/W
Thermal Resistance, Junction–to–Ambient	$R_{\theta JA}$	62.5	°C/W

*For additional information on our Pb–Free strategy and soldering details, please download the **onsemi** Soldering and Mounting Techniques Reference Manual, SOLDERRM/D.

MARKING DIAGRAM

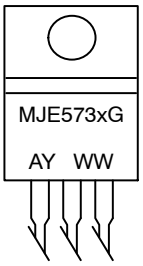

MJE573x	=	Device Code x = 0, 1, or 1A
G	=	Pb–Free Package
A	=	Assembly Location
Y	=	Year
WW	=	Work Week

ORDERING INFORMATION

See detailed ordering and shipping information on page 5 of this data sheet.

© Semiconductor Components Industries, LLC, 2015

Downloaded from Arrow.com.

ELECTRICAL CHARACTERISTICS (T_C = 25°C unless otherwise noted)

Characteristic	Symbol	Min	Max	Unit
OFF CHARACTERISTICS				
Collector−Emitter Sustaining Voltage (Note 1) (I_C = 30 mAdc, I_B = 0)	$V_{CEO(sus)}$			Vdc
MJE5730		300	–	
MJE5731		350	–	
MJE5731A		375	–	
Collector Cutoff Current	I_{CEO}			mAdc
(V_{CE} = 200 Vdc, I_B = 0) MJE5730		–	1.0	
(V_{CE} = 250 Vdc, I_B = 0) MJE5731		–	1.0	
(V_{CE} = 300 Vdc, I_B = 0) MJE5731A		–	1.0	
Collector Cutoff Current	I_{CES}			mAdc
(V_{CE} = 300 Vdc, V_{BE} = 0) MJE5730		–	1.0	
(V_{CE} = 350 Vdc, V_{BE} = 0) MJE5731		–	1.0	
(V_{CE} = 400 Vdc, V_{BE} = 0) MJE5731A		–	1.0	
Emitter Cutoff Current (V_{BE} = 5.0 Vdc, I_C = 0)	I_{EBO}	–	1.0	mAdc
ON CHARACTERISTICS (Note 1)				
DC Current Gain	h_{FE}			–
(I_C = 0.3 Adc, V_{CE} = 10 Vdc)		30	150	
(I_C = 1.0 Adc, V_{CE} = 10 Vdc)		10	–	
Collector−Emitter Saturation Voltage (I_C = 1.0 Adc, I_B = 0.2 Adc)	$V_{CE(sat)}$	–	1.0	Vdc
Base−Emitter On Voltage (I_C = 1.0 Adc, V_{CE} = 10 Vdc)	$V_{BE(on)}$	–	1.5	Vdc
DYNAMIC CHARACTERISTICS				
Current Gain − Bandwidth Product (I_C = 0.2 Adc, V_{CE} = 10 Vdc, f = 2.0 MHz)	f_T	10	–	MHz
Small−Signal Current Gain (I_C = 0.2 Adc, V_{CE} = 10 Vdc, f = 1.0 kHz)	h_{fe}	25	–	–

Product parametric performance is indicated in the Electrical Characteristics for the listed test conditions, unless otherwise noted. Product performance may not be indicated by the Electrical Characteristics if operated under different conditions.

1. Pulse Test: Pulse Width ≤ 300 μs, Duty Cycle ≤ 2.0%.

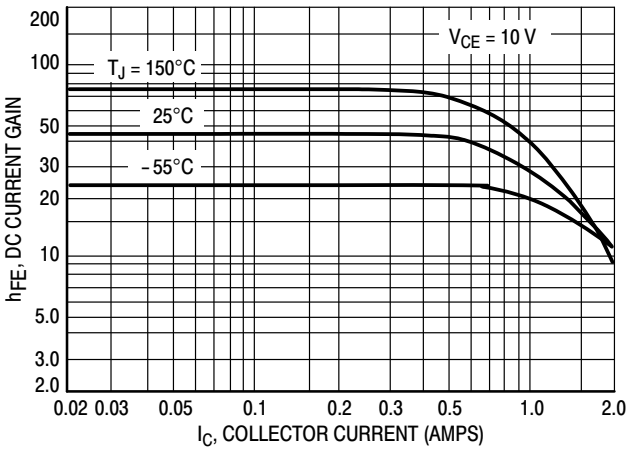

Figure 1. DC Current Gain

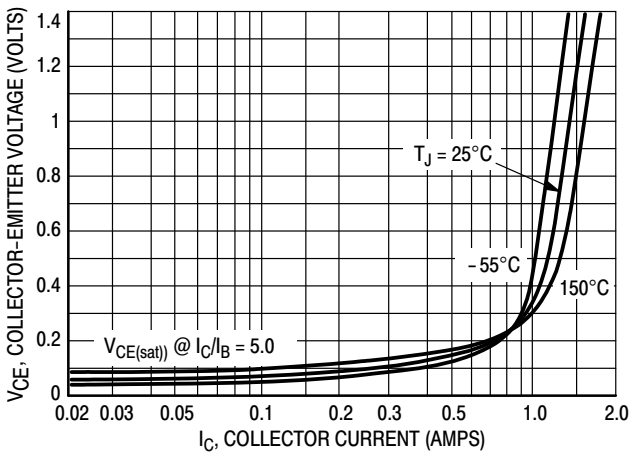

Figure 2. Collector−Emitter Saturation Voltage

Share Feedback
Your Opinion Matters

Downloaded from Arrow.com.

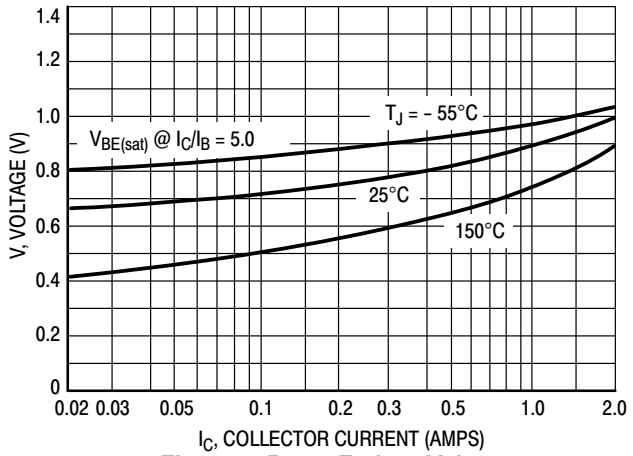

Figure 3. Base−Emitter Voltage

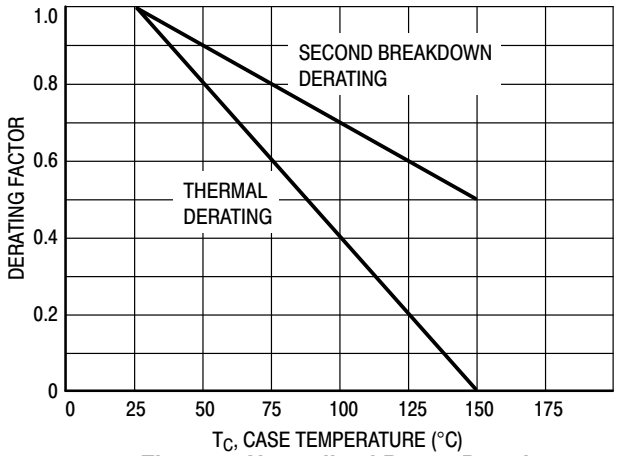

Figure 4. Normalized Power Derating

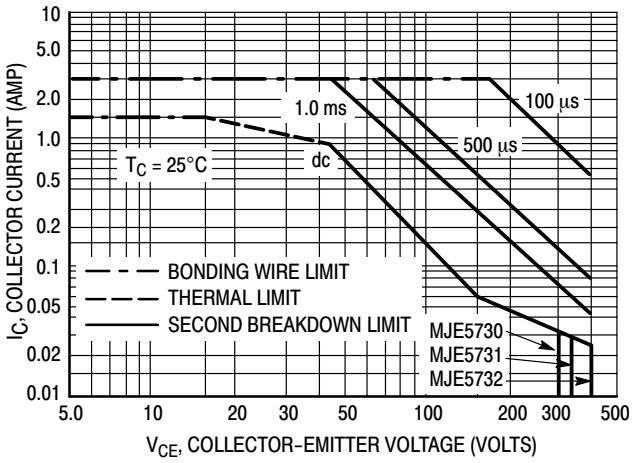

Figure 5. Forward Bias Safe Operating Area

There are two limitations on the power handling ability of a transistor: average junction temperature and second breakdown. Safe operating area curves indicate $I_C - V_{CE}$ limits of the transistor that must be observed for reliable operation; i.e., the transistor must not be subjected to greater dissipation than the curves indicate.

The data of Figure 5 is based on $T_{J(pk)}$ = 150°C; T_C is variable depending on conditions. Second breakdown pulse limits are valid for duty cycles to 10% provided $T_{J(pk)} \leq 150°C$. $T_{J(pk)}$ may be calculated from the data in Figure 6. At high case temperatures, thermal limitations will reduce the power that can be handled to values less than the limitations imposed by second breakdown.

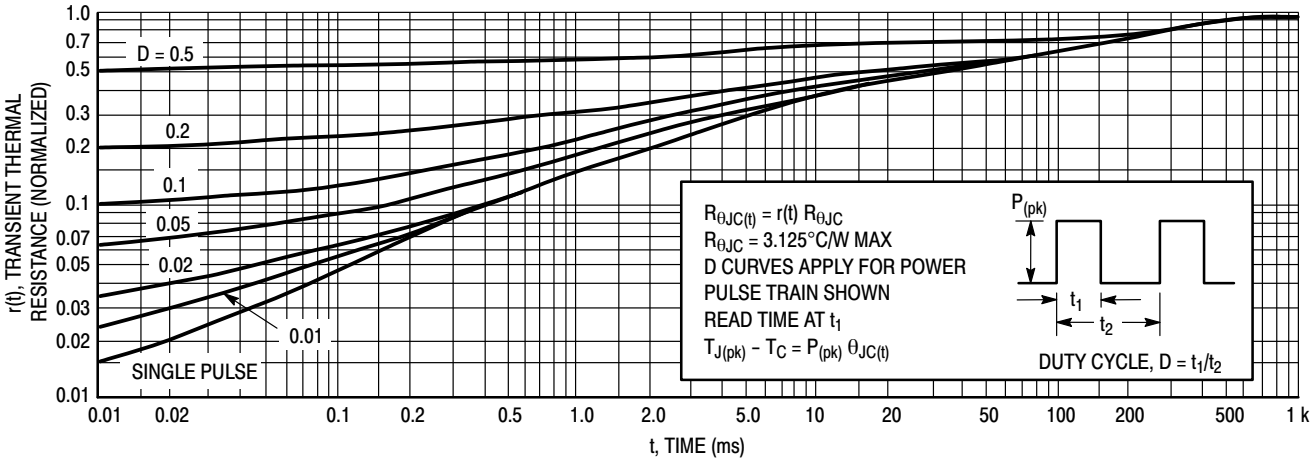

Figure 6. Thermal Response

Share Feedback
Your Opinion Matters

Downloaded from Arrow.com.

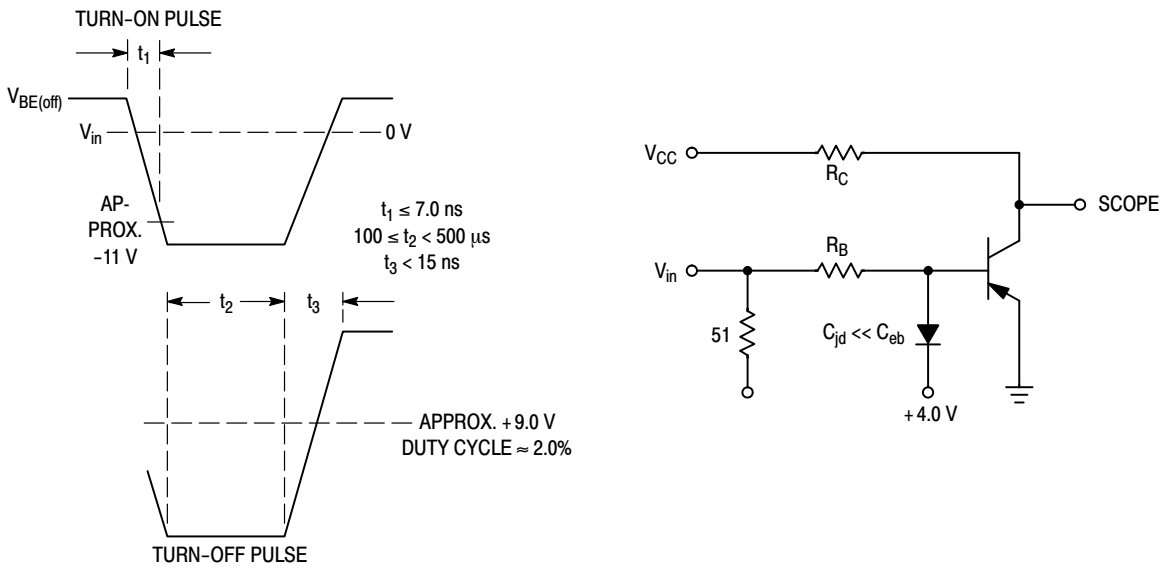

Figure 7. Switching Time Equivalent Circuit

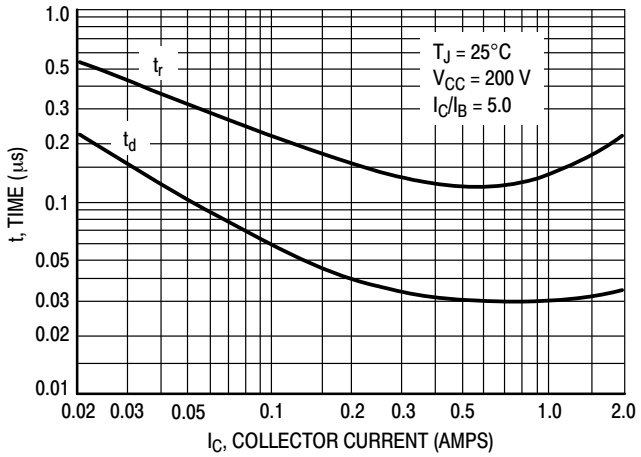

Figure 8. Turn−On Resistive Switching Times

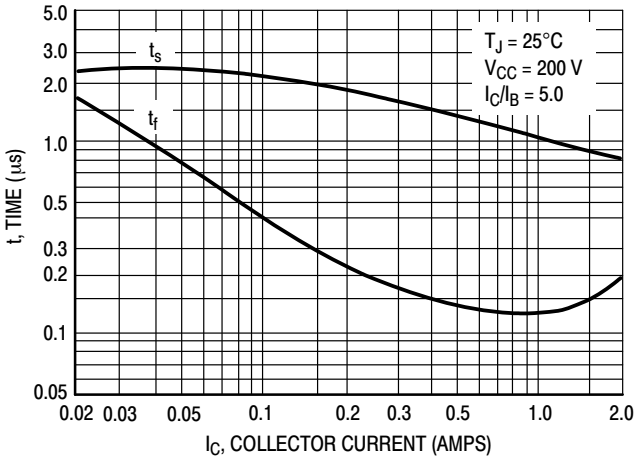

Figure 9. Resistive Turn−Off Switching Times

Test Circuit

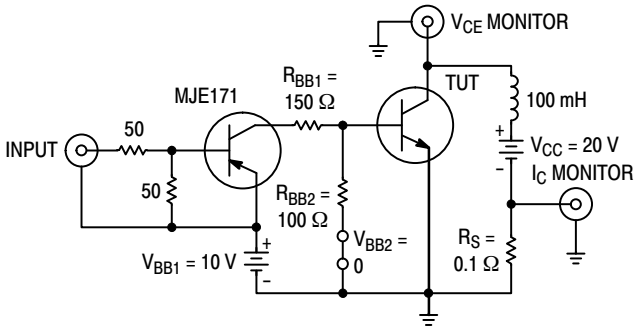

Voltage and Current Waveforms

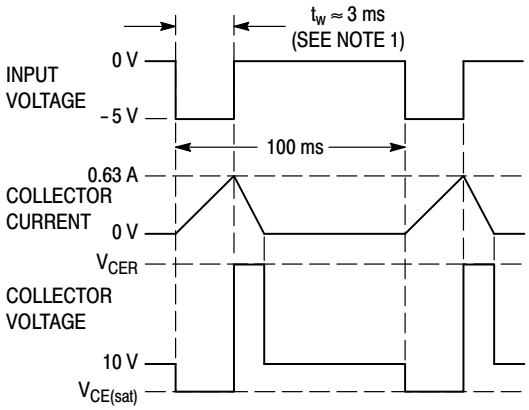

Figure 10. Inductive Load Switching

Share Feedback
Your Opinion Matters

Downloaded from Arrow.com.

ORDERING INFORMATION

Device	Package	Shipping
MJE5730G	TO−220 (Pb−Free)	50 Units / Rail
MJE5731G	TO−220 (Pb−Free)	50 Units / Rail
MJE5731AG	TO−220 (Pb−Free)	50 Units / Rail

Share Feedback
Your Opinion Matters

Downloaded from Arrow.com.

PACKAGE DIMENSIONS

TO−220
CASE 221A
ISSUE AK

DATE 13 JAN 2022

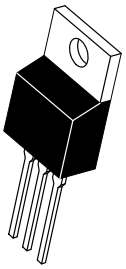

SCALE 1:1

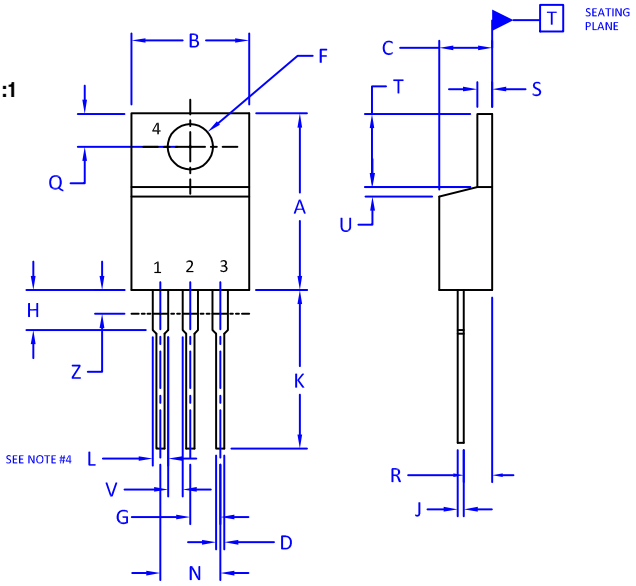

NOTES:

1. DIMENSIONING AND TOLERANCING PER ANSI Y14.5M, 2009.
2. CONTROLLING DIMENSION: INCHES
3. DIMENSION Z DEFINES A ZONE WHERE ALL BODY AND LEAD IRREGULARITIES ARE ALLOWED.
4. MAX WIDTH FOR F102 DEVICE = 1.35MM

	INCHES		MILLIMETERS	
DIM	MIN.	MAX.	MIN.	MAX.
A	0.570	0.620	14.48	15.75
B	0.380	0.415	9.66	10.53
C	0.160	0.190	4.07	4.83
D	0.025	0.038	0.64	0.96
F	0.142	0.161	3.60	4.09
G	0.095	0.105	2.42	2.66
H	0.110	0.161	2.80	4.10
J	0.014	0.024	0.36	0.61
K	0.500	0.562	12.70	14.27
L	0.045	0.060	1.15	1.52
N	0.190	0.210	4.83	5.33
Q	0.100	0.120	2.54	3.04
R	0.080	0.110	2.04	2.79
S	0.045	0.055	1.15	1.41
T	0.235	0.255	5.97	6.47
U	0.000	0.050	0.00	1.27
V	0.045	----	1.15	---
Z	----	0.080	---	2.04

STYLE 1:
PIN 1. BASE
2. COLLECTOR
3. EMITTER
4. COLLECTOR

STYLE 2:
PIN 1. BASE
2. EMITTER
3. COLLECTOR
4. EMITTER

STYLE 3:
PIN 1. CATHODE
2. ANODE
3. GATE
4. ANODE

STYLE 4:
PIN 1. MAIN TERMINAL 1
2. MAIN TERMINAL 2
3. GATE
4. MAIN TERMINAL 2

STYLE 5:
PIN 1. GATE
2. DRAIN
3. SOURCE
4. DRAIN

STYLE 6:
PIN 1. ANODE
2. CATHODE
3. ANODE
4. CATHODE

STYLE 7:
PIN 1. CATHODE
2. ANODE
3. CATHODE
4. ANODE

STYLE 8:
PIN 1. CATHODE
2. ANODE
3. EXTERNAL TRIP/DELAY
4. ANODE

STYLE 9:
PIN 1. GATE
2. COLLECTOR
3. EMITTER
4. COLLECTOR

STYLE 10:
PIN 1. GATE
2. SOURCE
3. DRAIN
4. SOURCE

STYLE 11:
PIN 1. DRAIN
2. SOURCE
3. GATE
4. SOURCE

STYLE 12:
PIN 1. MAIN TERMINAL 1
2. MAIN TERMINAL 2
3. GATE
4. NOT CONNECTED

Share Feedback
Your Opinion Matters

Downloaded from Arrow.com.

onsemi, onsemi, and other names, marks, and brands are registered and/or common law trademarks of Semiconductor Components Industries, LLC dba "**onsemi**" or its affiliates and/or subsidiaries in the United States and/or other countries. **onsemi** owns the rights to a number of patents, trademarks, copyrights, trade secrets, and other intellectual property. A listing of **onsemi**'s product/patent coverage may be accessed at www.onsemi.com/site/pdf/Patent−Marking.pdf. **onsemi** reserves the right to make changes at any time to any products or information herein, without notice. The information herein is provided "as−is" and **onsemi** makes no warranty, representation or guarantee regarding the accuracy of the information, product features, availability, functionality, or suitability of its products for any particular purpose, nor does **onsemi** assume any liability arising out of the application or use of any product or circuit, and specifically disclaims any and all liability, including without limitation special, consequential or incidental damages. Buyer is responsible for its products and applications using **onsemi** products, including compliance with all laws, regulations and safety requirements or standards, regardless of any support or applications information provided by **onsemi**. "Typical" parameters which may be provided in **onsemi** data sheets and/or specifications can and do vary in different applications and actual performance may vary over time. All operating parameters, including "Typicals" must be validated for each customer application by customer's technical experts. **onsemi** does not convey any license under any of its intellectual property rights nor the rights of others. **onsemi** products are not designed, intended, or authorized for use as a critical component in life support systems or any FDA Class 3 medical devices or medical devices with a same or similar classification in a foreign jurisdiction or any devices intended for implantation in the human body. Should Buyer purchase or use **onsemi** products for any such unintended or unauthorized application, Buyer shall indemnify and hold **onsemi** and its officers, employees, subsidiaries, affiliates, and distributors harmless against all claims, costs, damages, and expenses, and reasonable attorney fees arising out of, directly or indirectly, any claim of personal injury or death associated with such unintended or unauthorized use, even if such claim alleges that **onsemi** was negligent regarding the design or manufacture of the part. **onsemi** is an Equal Opportunity/Affirmative Action Employer. This literature is subject to all applicable copyright laws and is not for resale in any manner.

ADDITIONAL INFORMATION

TECHNICAL PUBLICATIONS:
Technical Library: www.onsemi.com/design/resources/technical−documentation
onsemi Website: www.onsemi.com

ONLINE SUPPORT: www.onsemi.com/support
For additional information, please contact your local Sales Representative at www.onsemi.com/support/sales

Downloaded from Arrow.com.