Product Details for 536606 -1

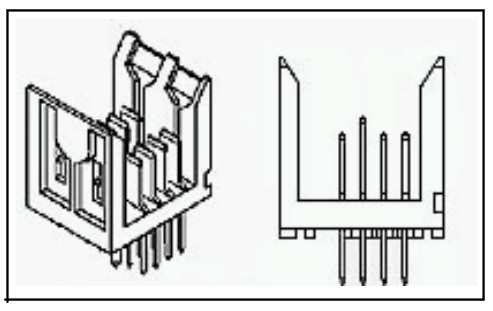

536606 -1

Active

2mm Centerline Futurebus+ Connectors

RoHS/Not ELV Compliant (Find RoHS Compliant Alternates/Compliance Statement)

Product Highlights:

- Module Type = Power
- 8 Power Positions
- Fixed -Board (Header)
- Sequencing
- Sequencing Configuration Row A = Blank

View all Features

Quick Links

Check Pricing & Availability
Search for Tooling
Product Feature Selector
Contact Us About This Product

Documentation & Additional Information

Product Drawings:

- ASSEMBLY, PIN, POWER, VERTICAL, Z -PACK 2mm FB, 4 ROW... (PDF, English)

Catalog Pages/Data Sheets:

- None Available

Product Specifications:

- None Available

Application Specifications:

- Z-PACK 2mm FB (Futurebus+) Receptacle and Pin Header... (PDF, English)

Instruction Sheets:

- None Available

CAD Files:

- None Available

List all Documents

Additional Information:

- Product Line Information

Related Products:

- Tooling

Product Features

(Please use the Product Drawing for all design activity)

Product Type Features:

- Product Type = Fixed -Board (Header)
- PCB Mount Angle = Vertical
- Post Type = Press -Fit
- Make First / Break Last = Yes
- Comment = With sequenced contacts. Refer to customer drawing for specific loading patterns.

Mechanical Attachment:

- Module Type = Power
- Number of Power Positions = 8
- Press -Fit Post Style = Compliant Pin
- Pin Header Width (mm [in]) = 16.00 [0.622]

Electrical Characteristics:

- Voltage Rating (VAC) = 30

Body Related Features:

- Sequencing = Yes
- Sequencing Configuration Row A = Blank, Mating Post Length 6.5mm, Termination Post Length 4.25mm
- Sequencing Configuration Row B = Blank, Mating Post Length 8mm, Termination Post Length 4.25mm
- Sequencing Configuration Row C = Blank, Mating Post Length 6.5mm, Termination Post Length 4.25mm
- Sequencing Configuration Row D = Blank, Mating Post Length 6.5mm, Termination Post Length 4.25mm
- Number of Rows = 4
- Post Plating = Tin Lead over Nickel
- Centerline, Matrix (mm [in]) = 2.00 x 2.00 [.079 x .079]

Contact Related Features:

- Contact Material = Phosphor Bronze
- Contact Mating Area Plating = Gold or Gold Flash over Palladium Nickel

Housing Related Features:

- Housing Material = Liquid Crystal Polymer (LCP)

Industry Standards:

- RoHS/ELV Compliance = RoHS/Not ELV Compliant
- Lead Free Solder Processes = Not relevant for lead free process
- RoHS/ELV Compliance History = Always was RoHS not ELV compliant

Other:

- Brand = AMP

© 2006 Tyco Electronics Corporation All Rights Reserved

Downloaded from Arrow.com.