Common Mode SCF39XV-Y, SCR39XV-Y & SCT39XV-Y Three-Phase 4 Wires Coils, Automotive Grade

Overview

The KEMET SCF39XV-Y, SCR39XV-Y and SCT39XV-Y three-phase 4 wires coils are common mode chokes with a wide variety of characteristics for automotive and harsh environment industrial application. These toroidal coils are designed with nanocrystalline metal or Mn-Zn ferrite cores and are useful in various noise countermeasure fields.

Applications

- On board charger for EV/PHEV
- Wireless charging systems with 85 kHz
- Medium power drives for steering, air conditioning and mild hybrid 48 V systems
- High voltage automotive and harsh environment industrial EMI filtering

Benefits

- Nanocrystalline metal core (SCF39XV-Y)
- Mn-Zn ferrite S15H (SCR39XV-Y)
- Mn-Zn ferrite 7HT (SCT39XV-Y)
- High rated voltage up to 1,000 V AC/DC
- Ultra-high inductance (SCF39XV-Y)
- Ultra-high permeability (SCR39XV-Y)
- Operating temperature range from −40°C to +150°C (SCF39XV-Y and SCT39XV-Y)
- Operating temperature range from −40°C to +120°C (SCR39XV-Y)
- UL 94 V–0 flame retardant rated base and cap
- AEC-Q200 qualified

Part Number System

SC	F	39	XV-	100-	Y	1R0	A	008	JH
Series	Core Material Code	Outer Core Diameter (mm)	Approval	Rated Current (A)	Phase	Wire Diameter (mm)	Windings	Number of Turns	Terminal Base Type
SC	F = Nanocrystal core R = Mn-Zn ferrite core S15H T = Mn-Zn ferrite core 7HT	39 = 39 mm ø	XV = AEC-Q200	xxx- = xx.x A Examples: 110 = 11.0 A 400 = 40.0 A	Y = Three-phase 4 wires	R = Decimal point Examples: 1R4 = 1.4 mm 2R0 = 2.0 mm	A = Single B = Double	00x = x turns 0xx = xx turns Examples: 003 = 3 turns 008 = 8 turns	JH = Horizontal type

© KEMET Electronics Corporation • One East Broward Boulevard
Fort Lauderdale, FL 33301 USA • 954-766-2800 • www.kemet.com

Downloaded from Arrow.com.

Magnetic Permeability of Ferrite Material

In order to achieve efficient noise reduction, it is important to select the material according to the target frequency band. Depending on its magnetic permeability, a particular ferrite material or metal material will be effective in a certain frequency band. A schematic representation of the relationship between the magnetic permeability of each material and the corresponding effective band range is shown in Figure 1.

Materials with higher magnetic permeability are effective in the lower frequency range, while those with lower magnetic permeability are effective in the higher frequency range. Thus, Mn-Zn products are mainly used for reducing conduction noise, while Ni-Zn products are commonly used for radiation noise countermeasures. Metal materials, however, are effective throughout the broadband frequency range, in low as well as high frequencies.

The effective frequency range varies depending on core shape, size, and number of windings. This frequency dependence of the magnetic permeability as shown in the figure serves for reference purposes only. It should be tested on the actual device to determine its effectiveness.

S18H, S15H, 10H, 7H, 7HT, 5H, 5HT, 1400L, and 700L are KEMET's proprietary ferrite material names. Other materials are available upon request.

Figure 1 - Relationship between the magnetic permeability of each material and its effective frequency range

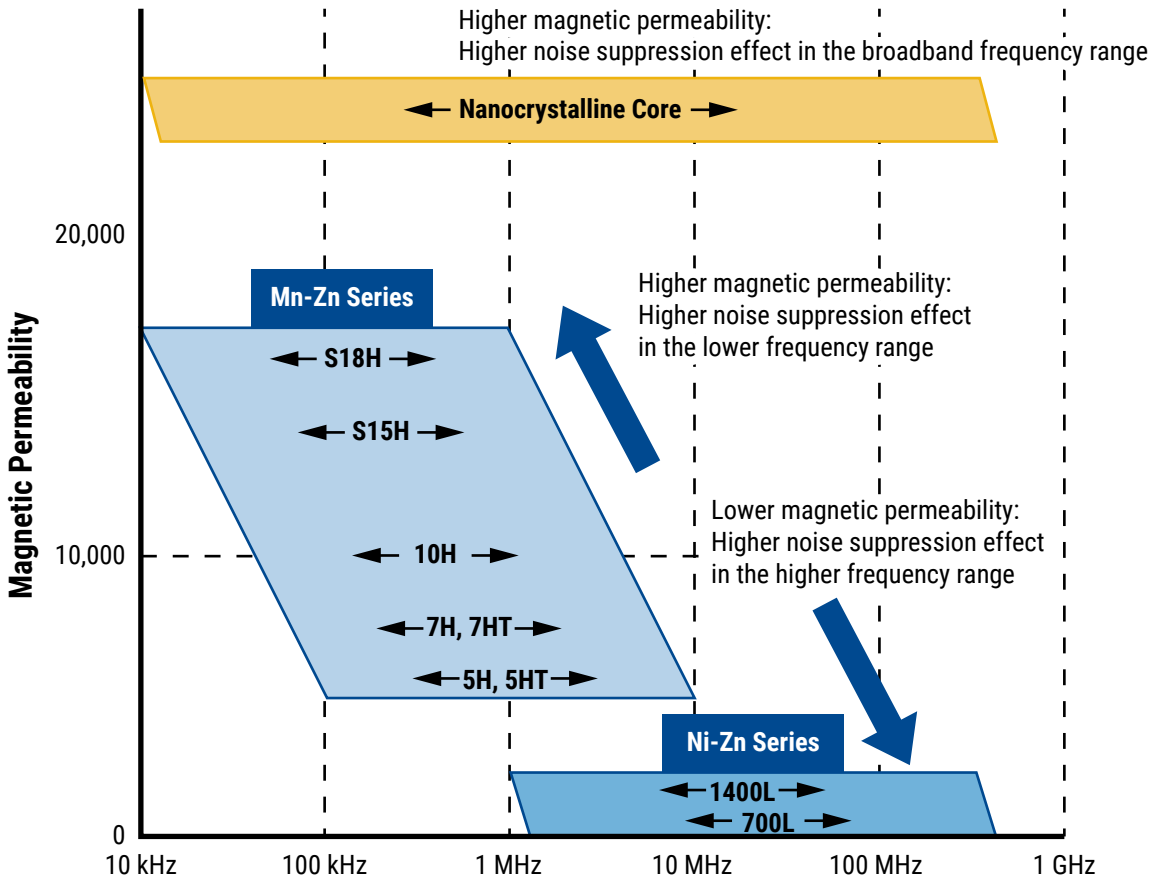

Downloaded from Arrow.com.

Dimensions – Millimeters

Figure 1

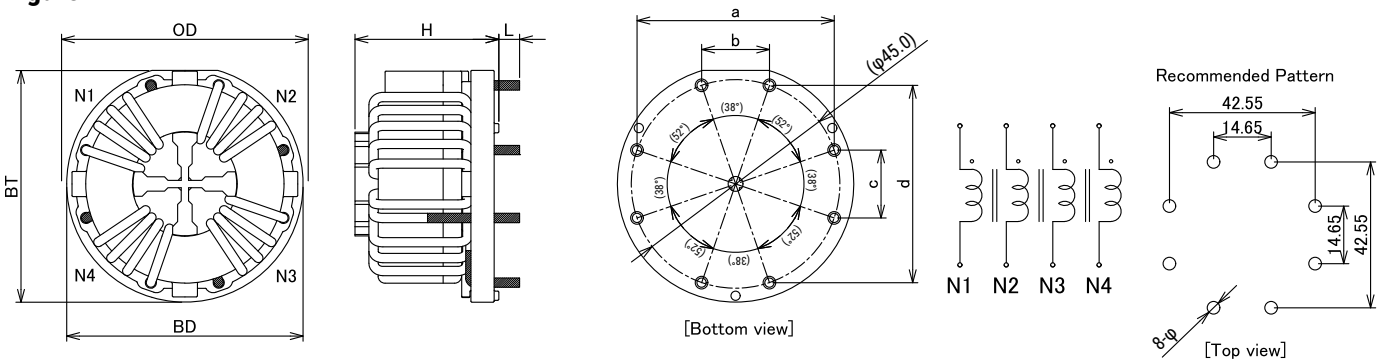

Figure 2

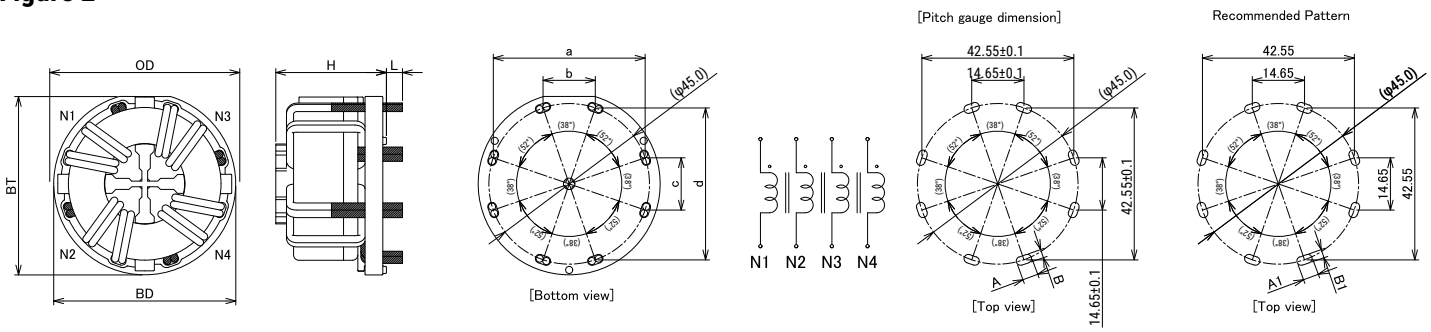

Part Number	Dimensions			Base Dimensions[2]		Pin Pitch[3]				Pitch Gauge[4]		Recommended Hole Pattern[5]			Figure
	OD Maximum	H[1]	L	BD	BT	a	b	c	d	A	B	φ	A1	B1	
SCF39XV-110-Y1R4A008JH	53.0	31.0 +1.0/-0.6	4.50 ±0.5	51.0±0.5	50.0±0.5	42.55±0.6	14.65±0.6	14.65±0.6	42.55±0.6	-	-	1.9	-	-	Fig. 1
SCF39XV-140-Y1R6A007JH	53.0	31.0 +1.0/-0.6	4.50 ±0.5	51.0±0.5	50.0±0.5	42.55±0.6	14.65±0.6	14.65±0.6	42.55±0.6	-	-	2.2	-	-	Fig. 1
SCF39XV-170-Y1R8A006JH	53.0	31.0 +1.0/-0.6	4.50 ±0.5	51.0±0.5	50.0±0.5	42.55±0.6	14.65±0.6	14.65±0.6	42.55±0.6	-	-	2.5	-	-	Fig. 1
SCF39XV-230-Y2R2A005JH	53.0	31.0 +1.0/-0.6	4.50 ±0.5	51.0±0.5	50.0±0.5	42.55±0.6	14.65±0.6	14.65±0.6	42.55±0.6	-	-	3.0	-	-	Fig. 1
SCF39XV-290-Y2R4A004JH	53.0	31.0 +1.0/-0.6	4.50 ±0.5	51.0±0.5	50.0±0.5	42.55±0.6	14.65±0.6	14.65±0.6	42.55±0.6	-	-	3.2	-	-	Fig. 1
SCF39XV-400-Y2R0B003JH	53.0	31.0 +1.0/-0.6	4.50 ±0.5	51.0±0.5	50.0±0.5	(42.55)	(14.65)	(14.65)	(42.55)	5.1±0.1	2.8±0.1	-	5.3	3.0	Fig. 2
SCR39XV-110-Y1R4A008JH	53.0	31.0 +1.0/-0.6	4.50 ±0.5	51.0±0.5	50.0±0.5	42.55±0.6	14.65±0.6	14.65±0.6	42.55±0.6	-	-	1.9	-	-	Fig. 1
SCR39XV-140-Y1R6A007JH	53.0	31.0 +1.0/-0.6	4.50 ±0.5	51.0±0.5	50.0±0.5	42.55±0.6	14.65±0.6	14.65±0.6	42.55±0.6	-	-	2.2	-	-	Fig. 1
SCR39XV-170-Y1R8A006JH	53.0	31.0 +1.0/-0.6	4.50 ±0.5	51.0±0.5	50.0±0.5	42.55±0.6	14.65±0.6	14.65±0.6	42.55±0.6	-	-	2.5	-	-	Fig. 1
SCR39XV-230-Y2R2A005JH	53.0	31.0 +1.0/-0.6	4.50 ±0.5	51.0±0.5	50.0±0.5	42.55±0.6	14.65±0.6	14.65±0.6	42.55±0.6	-	-	3.0	-	-	Fig. 1
SCR39XV-290-Y2R4A004JH	53.0	31.0 +1.0/-0.6	4.50 ±0.5	51.0±0.5	50.0±0.5	42.55±0.6	14.65±0.6	14.65±0.6	42.55±0.6	-	-	3.2	-	-	Fig. 1
SCR39XV-400-Y2R0B003JH	53.0	31.0 +1.0/-0.6	4.50 ±0.5	51.0±0.5	50.0±0.5	(42.55)	(14.65)	(14.65)	(42.55)	5.1±0.1	2.8±0.1	-	5.3	3.0	Fig. 2
SCT39XV-110-Y1R4A008JH	53.0	31.0 +1.0/-0.6	4.50 ±0.5	51.0±0.5	50.0±0.5	42.55±0.6	14.65±0.6	14.65±0.6	42.55±0.6	-	-	1.9	-	-	Fig. 1
SCT39XV-140-Y1R6A007JH	53.0	31.0 +1.0/-0.6	4.50 ±0.5	51.0±0.5	50.0±0.5	42.55±0.6	14.65±0.6	14.65±0.6	42.55±0.6	-	-	2.2	-	-	Fig. 1
SCT39XV-170-Y1R8A006JH	53.0	31.0 +1.0/-0.6	4.50 ±0.5	51.0±0.5	50.0±0.5	42.55±0.6	14.65±0.6	14.65±0.6	42.55±0.6	-	-	2.5	-	-	Fig. 1
SCT39XV-230-Y2R2A005JH	53.0	31.0 +1.0/-0.6	4.50 ±0.5	51.0±0.5	50.0±0.5	42.55±0.6	14.65±0.6	14.65±0.6	42.55±0.6	-	-	3.0	-	-	Fig. 1
SCT39XV-290-Y2R4A004JH	53.0	31.0 +1.0/-0.6	4.50 ±0.5	51.0±0.5	50.0±0.5	42.55±0.6	14.65±0.6	14.65±0.6	42.55±0.6	-	-	3.2	-	-	Fig. 1
SCT39XV-400-Y2R0B003JH	53.0	31.0 +1.0/-0.6	4.50 ±0.5	51.0±0.5	50.0±0.5	(42.55)	(14.65)	(14.65)	(42.55)	5.1±0.1	2.8±0.1	-	5.3	3.0	Fig. 2

[1] The lower limit dimension is not 100% inspected in production process.
[2] The terminal base dimension is not 100% inspected in production process.
[3] Inspection by using pin-pitch gauge.
[4] Inspection by using pin-pitch gauge as shown in Figure 2.
[5] Values are for reference only, not guaranteed.

Downloaded from Arrow.com.

Environmental Compliance

All KEMET AC line filters are RoHS Compliant.

Performance Characteristics

Item	Performance Characteristics
Rated Voltage	1,000 VAC/VDC
Withstanding Voltage	2,400 VAC (2 seconds, between lines)
Insulation Resistance	>100 MΩ at 1,000 VDC (between lines)
Rated Current Range	11 – 40 A
Rated Inductance Range	0.23 – 1.6 mH +50%, −30% (SCF39XV-Y) 0.118 – 0.84 mH ±35% (SCR39XV-Y) 0.067 – 0.476 mH ±30% (SCT39XV-Y)
Inductance Measurement Condition	100 kHz
Operating Temperature Range	−40°C to +150°C (include self temperature rise) (SCF39XV-Y & SCT39XV-Y) −40°C to +120°C (include self temperature rise) (SCR39XV-Y)

Downloaded from Arrow.com.

Table 1 – Ratings & Part Number Reference

Part Number	Rated Voltage AC/DC (V)	Rated Current (A)	Inductance 100kHz (mH)	DC Resistance/ Line (mΩ)	Temperature Rise (K) Reference	Wire Diameter (mm)	Weight (g) Approximate
SCF39XV-110-Y1R4A008JH	1,000	11	1.600 +50%, -30%	5.870 ±13%	50	1.4	108.8
SCF39XV-140-Y1R6A007JH	1,000	14	1.200 +50%, -30%	4.040 ±13%	50	1.6	114.1
SCF39XV-170-Y1R8A006JH	1,000	17	0.900 +50%, -30%	2.830 ±13%	50	1.8	118.9
SCF39XV-230-Y2R2A005JH	1,000	23	0.620 +50%, -30%	1.610 ±13%	50	2.2	130.9
SCF39XV-290-Y2R4A004JH	1,000	29	0.400 +50%, -30%	1.100 ±13%	50	2.4	130.3
SCF39XV-400-Y2R0B003JH	1,000	40	0.230 +50%, -30%	0.530 ±23%	45	2.0 x 2 Parallel	133.4
SCR39XV-110-Y1R4A008JH	1,000	11	0.840 ±35%	5.870 ±13%	50	1.4	100.5
SCR39XV-140-Y1R6A007JH	1,000	14	0.640 ±35%	4.040 ±13%	50	1.6	105.4
SCR39XV-170-Y1R8A006JH	1,000	17	0.470 ±35%	2.830 ±13%	50	1.8	109.8
SCR39XV-230-Y2R2A005JH	1,000	23	0.330 ±35%	1.610 ±13%	50	2.2	120.9
SCR39XV-290-Y2R4A004JH	1,000	29	0.210 ±35%	1.100 ±13%	50	2.4	120.4
SCR39XV-400-Y2R0B003JH	1,000	40	0.118 ±35%	0.530 ±23%	45	2.0 x 2 Parallel	123.2
SCT39XV-110-Y1R4A008JH	1,000	11	0.476 ±30%	5.870 ±13%	50	1.4	100.4
SCT39XV-140-Y1R6A007JH	1,000	14	0.365 ±30%	4.040 ±13%	50	1.6	105.3
SCT39XV-170-Y1R8A006JH	1,000	17	0.268 ±30%	2.830 ±13%	50	1.8	109.7
SCT39XV-230-Y2R2A005JH	1,000	23	0.187 ±30%	1.610 ±13%	50	2.2	120.8
SCT39XV-290-Y2R4A004JH	1,000	29	0.119 ±30%	1.100 ±13%	50	2.4	120.3
SCT39XV-400-Y2R0B003JH	1,000	40	0.067 ±30%	0.530 ±23%	45	2.0 x 2 Parallel	123.1
Part Number	**Rated Voltage AC/DC (V)**	**Rated Current (A)**	**Inductance 100kHz (mH)**	**DC Resistance/ Line (mΩ)**	**Temperature Rise (K) Reference**	**Wire Diameter (mm)**	**Weight (g) Approximate**

Packaging

Type	Packaging Type	Pieces Per Box
SCF39XV-Y	Tray	48
SCR39XV-Y		
SCT39XV-Y		

Downloaded from Arrow.com.

Frequency Characteristics

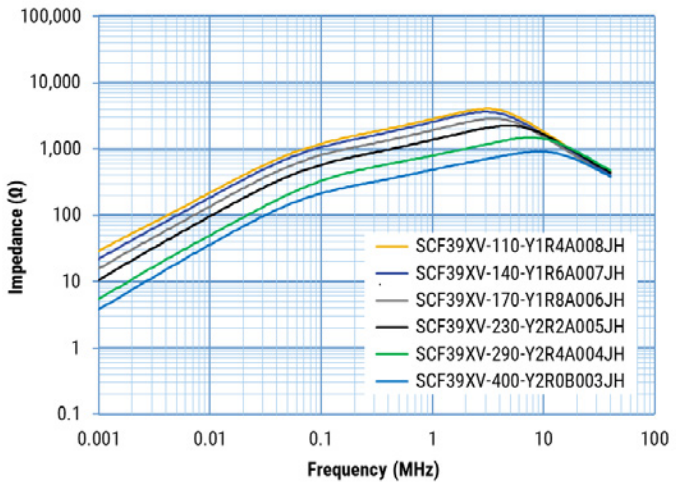

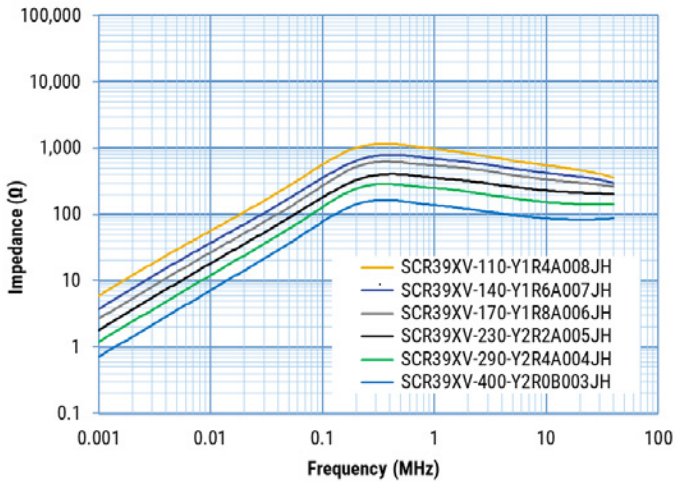

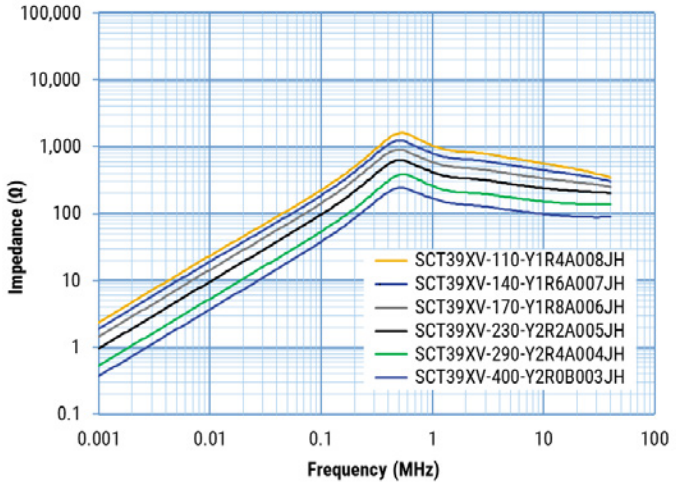

Downloaded from Arrow.com.

Recommend Solder Condition

Soldering method	Temperature	Soldering time	Number of times
Solder iron	400°C maximum	3 seconds maximum	2 times
Dip soldering	260°C maximum	3 seconds maximum	2 times
Flow soldering	See Below	See Below	See Below

Flow Soldering Condition

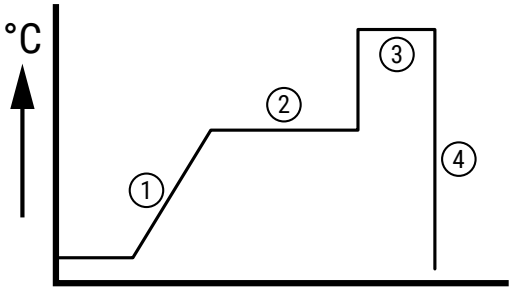

1. Reserve Temperature
2. Preheat Temperature: 80~110°C Time: 120 seconds
3. Soak Temperature: 250°C Time: 8 seconds
4. Cooling

Solder conditions are for reference only and should be con f rmed by the customer there is no problem.

Downloaded from Arrow.com.

Temperature Rise Measuring Method

Connect the cable to the choke by soldering and cool it to room temperature. Also, N1, N2, N3 and N4 are shorted.
In order to prevent temperature changes due to air convections, a rated current is applied to the choke inside the container (container size: about 550 x 450 x 300 mm).

At that time, the temperature of the inner diameter of the choke and the ambient temperature are measured with a thermocouple and recorded with a data logger.

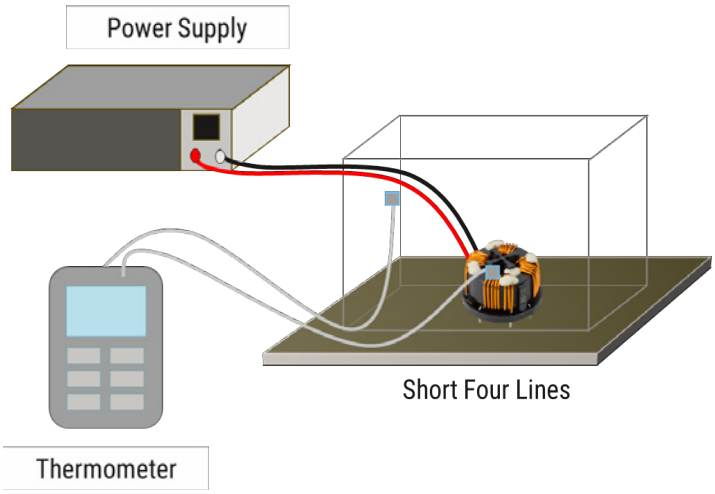

Figure 1 - Measurement system

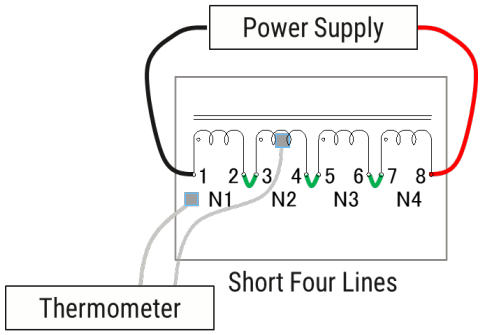

Figure 2 - Schematics

After confirming that the temperature of the choke has stabilized, turn off the power and calculate the temperature rise value from the measured data using the following formula.

$T = (t_2 - t_{a2}) - (t_1 - t_{a1})$
And then,
T : Temperature rising (°C)
t_1 : Initial temperature of the choke (°C)
t_2 : Temperature of the choke when current is applied (°C)
t_{a1} : Initial ambient temperature (°C)
t_{a2} : Ambient temperature when current is applied (°C)

Downloaded from Arrow.com.

Handling Precautions

Precautions for product storage

AC Line Filters should be stored in normal working environments. While the chokes themselves are quite robust in other environments, solderability will be degraded by exposure to high temperatures, high humidity, corrosive atmospheres, and long term storage.

KEMET recommends that maximum storage temperature not exceed 40°C and maximum storage humidity not exceed 70% relative humidity. Atmospheres should be free of chlorine and sulfur bearing compounds. Temperature fluctuations should be minimized to avoid condensation on the parts. Avoid storage near strong magnetic fields, as this might magnetize the product.

For optimized solderability, AC line filters stock should be used promptly and preferably within 6 months of receipt.

Product temperature rise values

The values listed for temperature rise are the result of self-heating in wires when the rated current (commercial frequency) is applied.

When using the product, check and evaluate the value of the core temperature rise under actual operating conditions.

Downloaded from Arrow.com.

KEMET Electronics Corporation Sales Offices

For a complete list of our global sales offices, please visit www.kemet.com/sales.

Disclaimer

YAGEO Corporation and its affiliates do not recommend the use of commercial or automotive grade products for high reliability applications or manned space flight.

All product specifications, statements, information and data (collectively, the "Information") in this datasheet are subject to change. The customer is responsible for checking and verifying the extent to which the Information contained in this publication is applicable to an order at the time the order is placed. All Information given herein is believed to be accurate and reliable, but it is presented without guarantee, warranty, or responsibility of any kind, expressed or implied.

Statements of suitability for certain applications are based on KEMET Electronics Corporation's ("KEMET") knowledge of typical operating conditions for such applications, but are not intended to constitute – and KEMET specifically disclaims – any warranty concerning suitability for a specific customer application or use. The Information is intended for use only by customers who have the requisite experience and capability to determine the correct products for their application. Any technical advice inferred from this Information or otherwise provided by KEMET with reference to the use of KEMET's products is given gratis, and KEMET assumes no obligation or liability for the advice given or results obtained.

Although KEMET designs and manufactures its products to the most stringent quality and safety standards, given the current state of the art, isolated component failures may still occur. Accordingly, customer applications which require a high degree of reliability or safety should employ suitable designs or other safeguards (such as installation of protective circuitry or redundancies) in order to ensure that the failure of an electrical component does not result in a risk of personal injury or property damage.

Although all product–related warnings, cautions and notes must be observed, the customer should not assume that all safety measures are indicated or that other measures may not be required.

When providing KEMET products and technologies contained herein to other countries, the customer must abide by the procedures and provisions stipulated in all applicable export laws and regulations, including without limitation the International Traffic in Arms Regulations (ITAR), the US Export Administration Regulations (EAR) and the Japan Foreign Exchange and Foreign Trade Act.

KEMET is a registered trademark of KEMET Electronics Corporation.

Downloaded from Arrow.com.