Data Sheet | Item Number: 722-236/005-000/039-000

Female connector for rail-mount terminal blocks; 0.6 x 1 mm pins; angled; 100% protected against mismating; Locking lever; Pin spacing 5 mm; 6-pole; light gray

https://www.wago.com/722-236/005-000/039-000

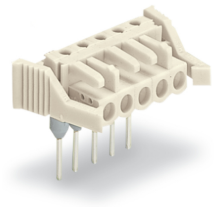

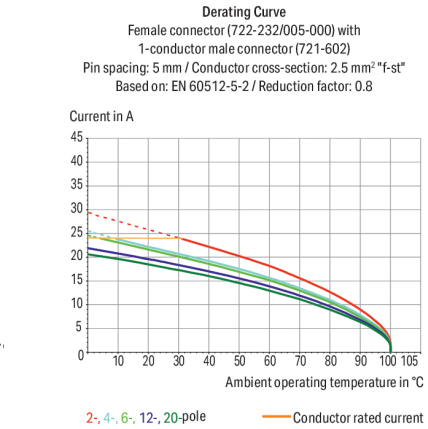

Color: light gray

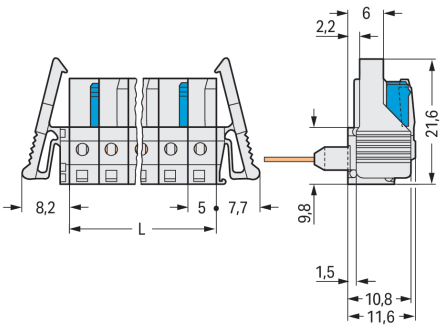

Dimensions in mm
L = (pole no. x pin spacing) 2-pole female connectors – one latch only

Female connector, 722 Series, with 5 mm pin spacing

Enjoy convenient electrical installations with this female connector (item number 722-236/005-000/039-000). Dimensions: (45.9 x 26.1 x 18.25) mm (width x height x depth).

Tin is used for coating the contact surfaces.

Downloaded from Arrow.com.

Notes

Safety Information	The *MCS – MULTI CONNECTION SYSTEM* includes connectors without breaking capacity in accordance with DIN EN 61984. When used as intended, these connectors must not be connected/disconnected when live or under load.When used as intended, these connectors must not be connected/disconnected when live or under load. The circuit design should ensure header pins, which can be touched, are not live when unmated.
Variants:	Other pole numbers Other versions (or variants) can be requested from WAGO Sales or configured at https://configurator.wago.com/.

Electrical data

Ratings per	IEC/EN 60664-1		
Overvoltage category	III	III	II
Pollution degree	3	2	2
Nominal voltage	320 V	320 V	630 V
Rated impulse withstand voltage	4 kV	4 kV	4 kV
Rated current	12 A	12 A	12 A

Approvals per	UL 1059		
Use group	B	C	D
Rated voltage	300 V	-	300 V
Rated current	15 A	-	10 A

Approvals per	UL 1977
Rated voltage	600 V
Rated current	15 A

Approvals per	CSA		
Use group	B	C	D
Rated voltage	300 V	-	300 V
Rated current	15 A	-	10 A

Connection Data

Clamping units	6
Total number of potentials	6
Number of connection types	1
Number of levels	1

Connection 1

Pole number	6

Physical data

Pin spacing	5 mm / 0.197 inches
Width	45.9 mm / 1.807 inches
Height	26.1 mm / 1.028 inches
Height from the surface	11.6 mm / 0.457 inches
Depth	18.25 mm / 0.719 inches

Mechanical data

Variable coding	Yes
Anti-rotation protection	Yes

Plug-in connection

Contact type (pluggable connector)	Female connector/socket
Connector (connection type)	for front-entry rail-mount terminal block
Mismating protection	Yes
Locking of plug-in connection	Locking lever
Mating direction to the rail-mount terminal block	0 °

Downloaded from Arrow.com.

Material data

Note (material data)	Information on material specifications can be found here
Color	light gray
Material group	I
Insulation material (main housing)	Polyamide (PA66)
Flammability class per UL94	V0
Contact material	Copper alloy
Contact Plating	Tin
Fire load	0.122 MJ
Weight	7.1 g

Environmental requirements

Limit temperature range	-60 … +85 °C
Processing temperature	-35 … +60 °C

Commercial data

Product Group	3 (Multi Conn. System)
PU (SPU)	50 pcs
Packaging type	Box
Country of origin	DE
GTIN	4044918572484
Customs tariff number	85366990990

Product Classification

UNSPSC	39121409
eCl@ss 10.0	27-14-11-06
eCl@ss 9.0	27-14-11-06
ETIM 9.0	EC001284
ETIM 10.0	EC001284
ECCN	NO US CLASSIFICATION

Environmental Product Compliance

RoHS Compliance Status	Compliant,No Exemption

Approvals / Certificates

General approvals

Approval	Standard	Certificate Name
CSA DEKRA Certification B.V.	C22.2	1466354
UL Underwriters Laboratories Inc.	UL 1059	UL-US-L45172-6187117-81111991-4
UR Underwriters Laboratories Inc.	UL 1977	E45171

Approvals for marine applications

Approval	Standard	Certificate Name
ABS American Bureau of Shipping	-	24-0095975-PDA
DNV DNV GL SE	-	TAE000016Z
PRS Polski Rejestr Statków	-	TE/1095/880590/23

Downloaded from Arrow.com.

Downloads

Environmental Product Compliance

Compliance Search

Documentation

Additional Information

Technical Section	03.04.2019	pdf 2027.26 KB

CAD/CAE-Data

CAD data

CAE data

1 Compatible Products

1.1 System counterpart

1.1.1 Male connector/plug



Item No.: 721-606
1-conductor male connector; CAGE CLAMP®; 2.5 mm²; Pin spacing 5 mm; 6-pole; 100% protected against mismating; 2,50 mm²; light gray

1.2 Optional Accessories

1.2.1 Installation

1.2.1.1 Empty housings



Item No.: 280-902/056-000
Spacer of same profile; suitable for 2-conductor terminal blocks of horizontal type; orange



Item No.: 280-654/056-000
Spacer of same profile; suitable for 3- and 4-conductor terminal blocks of angled type; orange



Item No.: 280-650/056-000
Spacer of same profile; suitable for 3-conductor terminal blocks of horizontal type; orange



Item No.: 280-835/056-000
Spacer of same profile; suitable for 4-conductor terminal blocks of horizontal type; orange

Downloaded from Arrow.com.

1.2.2 Test and measurement

1.2.2.1 Testing accessories



Item No.: 210-136
Test plug; 2 mm Ø; with 500 mm cable; red



Item No.: 231-661
Test plugs for female connectors; for 5 mm and 5.08 mm pin spacing; 2,50 mm²; light gray

1.2.3 Tool

1.2.3.1 Operating tool



Item No.: 280-436
Operating tool; made of insulating material; 6-way; white

Downloaded from Arrow.com.