Size 20
Signal Contacts

Size 8
Power Contacts

Compliant to MTCA.0 R1.0 for 48 volt and 24 volt systems and MTCA.1 R1.0 for 12 volt systems

Positronic Industries is known throughout the PCI Industrial Computer Manufactures Group (PICMG) community as a value supplier of AdvancedTCA Zone 1 and Compact PCI power connectors, as well as a wide variety of other power distribution interconnects.

Positronic has been privileged to participate in PICMG specification work, including MicroTCA. Positronic is a proud supplier of power input connectors for use in MicroTCA power modules.

QB series offers board mount connectors for power modules, and cable connectors for bringing power to modules. QB series meet requirements of the MicroTCA Specification for 48V, 24V ***and 12V*** systems.

To learn more about PICMG or to get specifications, visit www.picmg.org.

POSITRONIC INDUSTRIES RoHS Part EU Directive 2002/95/EC

For RoHS options see page 55-56.

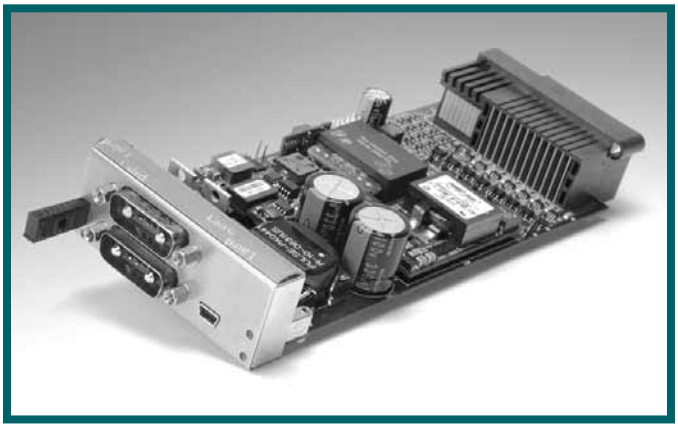

MTCA power module shown above is compliments of Actel Corp. (www.actel.com) and Signal Stream Technologies, LLC. (www.signalstreamtechnologies.com).

TEMPERATURE RISE CURVE

7W2 VARIANT

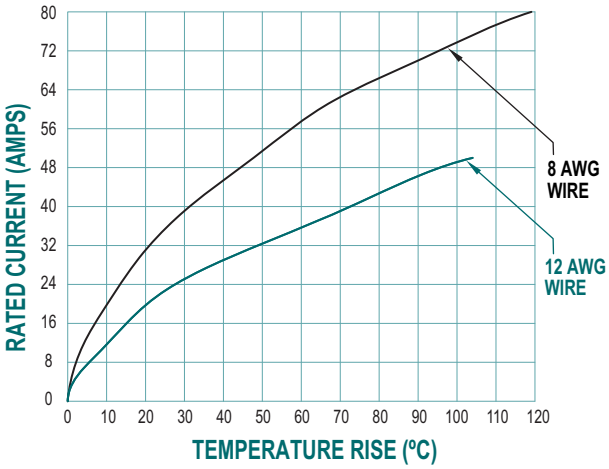

Test conducted in accordance with UL1977. All power contacts under load.

8 AWG: Curve developed using QB7W2MR7T2/7W2MR7T20 and QB7W2S00000 connectors with FC4008D-1817.0 contacts terminated to 8 AWG wire.
12 AWG: Curve developed using QB7W2MR7T2/7W2MR7T20 and QB7W2S00000 connectors with FC4012D-1817.0 contacts terminated to 12 AWG wire.

**DIMENSIONS ARE IN INCHES [MILLIMETERS].
ALL DIMENSIONS ARE SUBJECT TO CHANGE.**

Downloaded from Arrow.com.

TECHNICAL CHARACTERISTICS

MATERIALS AND FINISHES:

Insulator: Glass filled polyester per MIL-M-24519 UL 94V-0, blue color.

Contacts: Precision machined copper alloy.

Contact Plating:

Signal: Gold flash over nickel plate and 0.000050 [1.27µ] gold over nickel plate. Other finishes available upon request.

Power: Gold flash over nickel. Other finishes available upon request.

Shells: Steel or brass with tin plate; zinc plate with chromate seal; stainless steel passivated. Other materials and finishes available upon request.

Brackets: Copper alloy or steel with zinc plate and chromate seal or tin plate; phosphor bronze with tin plate; stainless steel, passivated.

Push-On Fasteners: Beryllium copper with tin plate.

Jackscrew Systems: Brass or steel with zinc plate and chromate seal or clear zinc plate or tin plate; stainless steel, passivated.

Hoods: Glass filled polyester, UL 94V-0, blue color.

MECHANICAL CHARACTERISTICS:

Signal Contacts, Fixed: Size 20 contacts, male - 0.040 inch [1.02mm] mating diameter. Female contacts are PosiBand closed entry design.

Power Contacts, Fixed: Size 8 contacts, male - 0.142 inch i[3.61mm] mating diameter. Female contacts are closed entry "Large Surface Area" design.

Contact Retention in Insulator: Signal: 9 lbs [40N]. Power: 22 lbs [98N].

Locking Systems: Jackscrews.

Mechanical Operations: 200 operations, minimum.

ELECTRICAL CHARACTERISTICS:

SIZE 20 CONTACTS

Contact Current Rating: 7.5 amperes nominal.

Initial Contact Resistance: 0.008 ohms maximum.

Proof Voltage: 1000 V r.m.s.

SIZE 8 CONTACTS

POWER CONTACTS

Contact Current Rating - Tested per U.L. 1977:

***QB7W2* MTCA.0 48V:** 70 amperes nominal.

See Temperature Rise Curve on page 49 for details.

***QBH9W4* MTCA.0 24V:** 85 amperes nominal.

~~Table 7-32 of~~ MTCA.0 R1.0~~, MicroTCA~~ specification~~,~~ requires each power contact in the 24V input connector to carry 49 amps minimum at a 30°C temperature rise prior to derating. The ~~Positronic~~ QB9W4 connector meets this requirement.

QBH5W5 / QBH15W4 MTCA.1 12V: 75 amperes nominal.

MTCA.1 R1.0 specification requires each power contact in the 12V input connector to carry 50 amps minimum at a 30°C temperature rise prior to derating. The QBH5W5 and QBH15W4 connectors meets this requirement.

Initial Contact Resistance: 0.0005 ohms max. per IEC 512-2, Test 2b.

Proof Voltage: 1000 V r.m.s.

CONNECTOR

Insulator Resistance: 5 G ohms.

Working Voltage: 300 V r.m.s.

CLEARANCE AND CREEPAGE DISTANCE:

Between Power Contacts: 0.06 inch [1.5 mm], minimum

Between Signal Contacts: 0.02 inch [0.4 mm], minimum

Between Power and Signal Contacts: 0.06 inch [1.5 mm], minimum

Between Power Contacts and Shelf GND: 0.06 inch [1.5 mm], minimum

Between Signal Contacts and Shelf GND: 0.06 inch [1.5 mm], minimum

NEW!

AIR COOLED RUGGEDIZED MicroTCA® SYSTEMS

12 VOLT INPUT POWER CONNECTORS PER MTCA.1, R1.0

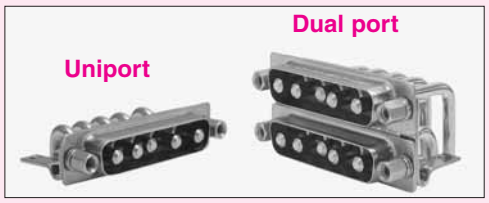

5W5
Five (5) Size 8 Contacts

15W4
Four (4) Size 8 Contacts and
Eleven (11) Size 22 Contacts

REVIEW THE FOLLOWING FIVE PAGES!

Contact Technical Sales for additional information.

Downloaded from Arrow.com.

Positronic Industries
connectpositronic.com

MicroTCA POWER
INPUT CONNECTORS

Combo-D
D-Sub

THIS DRAWING CONTAINS INFORMATION PROPRIETARY TO POSITRONIC AND IT'S SUBSIDIARIES. POSITRONIC BELIEVES THE DATA ON THIS DRAWING TO BE RELIABLE, SINCE THE TECHNICAL INFORMATION IS GIVEN FREE OF CHARGE, THE USER EMPLOYS SUCH INFORMATION AT HIS OWN DISCRETION AND RISK. POSITRONIC ASSUMES NO RESPONSIBILITY FOR RESULTS OBTAINED OR DAMAGES INCURRED FROM USE OF SUCH INFORMATION IN WHOLE OR IN PART.

SK10923

DATE	REV	REVISION RECORD	APP	DR	CK
7-17-09	NC	ECO 31320	RCW	BS	COLE

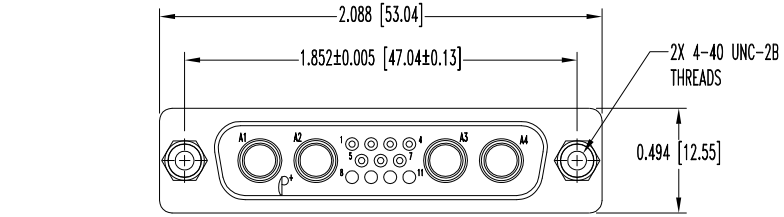

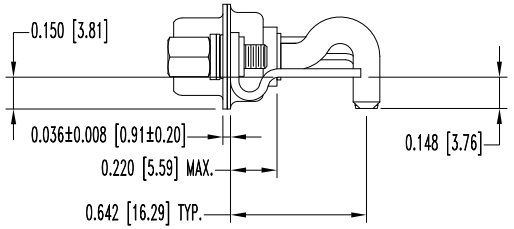

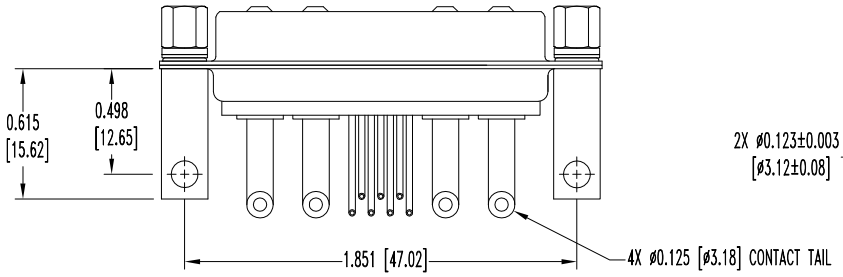

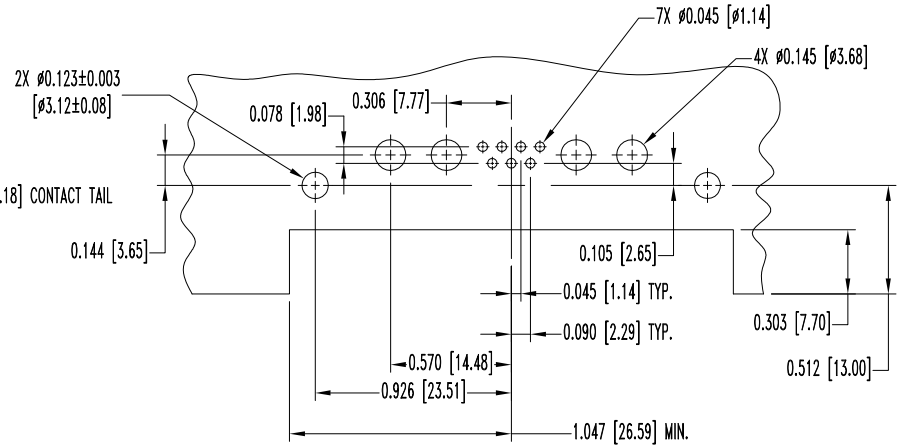

CONTACT HOLE PATTERN

NOTES:

1. MATERIALS AND FINISHES:
   - INSULATOR: GLASS FILLED POLYESTER PER MIL-M-24519, UL 94V-0, COLOR: BLUE.
   - CONTACTS: COPPER ALLOY, GOLD FLASH OVER NICKEL PLATE.
   - SHELLS: STEEL, ZINC PLATE WITH CHROMATE SEAL.
   - MOUNTING BRACKETS: BRASS, ZINC PLATE WITH CHROMATE SEAL.
   - JACKSCREWS: STEEL, ZINC PLATE WITH CHROMATE SEAL.
2. ELECTRICAL CHARACTERISTICS:
   - SIGNAL CONTACTS:
     - CONTACT CURRENT RATING: 10 AMPS NOMINAL.
     - INITIAL CONTACT RESISTANCE: 0.008 OHMS MAX.
   - POWER CONTACTS:
     - CONTACT CURRENT RATING: 50 AMPS MIN. AT 30°C RISE.
     - INITIAL CONTACT RESISTANCE: 0.0005 OHMS MAX.
   - INSULATOR RESISTANCE: 5 G OHMS.
   - WORKING VOLTAGE: 300 V r.m.s.
3. TEMPERATURE RANGE: -55°C TO +125°C
4. CONNECTOR IS ROHS COMPLIANT PER ROHS DIRECTIVE 2002/95/EC OF 27 JAN 2003.
5. DIMENSIONS ARE IN INCHES [MILLIMETERS]

POSITRONIC INDUSTRIES INC.
www.connectpositronic.com
FSCM 28198

DECIMAL TOL. ± 0.015 [0.38]	QB SERIES	SCALE N.T.S.	DRAWN BY B SHELLEDY / APPROVED BY R WILLIAMS
	TITLE QBH15W4M57R70T20/AA		
ANGULAR TOL. ±5°	DATE 7-16-09	DRAWING NUMBER SK10923	REV. NC

DIMENSIONS ARE IN INCHES [MILLIMETERS].
ALL DIMENSIONS ARE SUBJECT TO CHANGE.

Downloaded from Arrow.com.

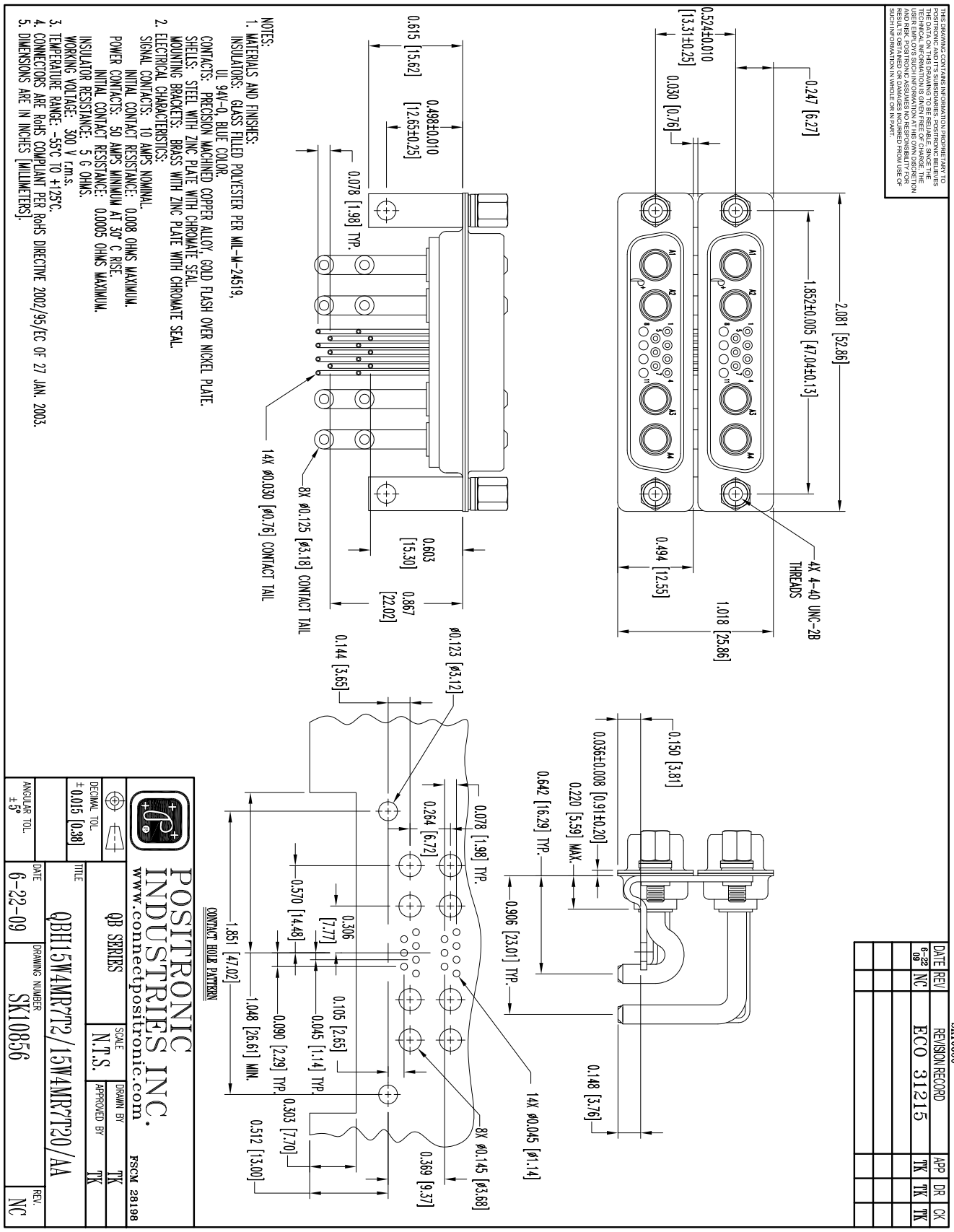

Downloaded from Arrow.com.

Positronic Industries
connectpositronic.com

MicroTCA POWER
INPUT CONNECTORS

Combo-D
D-Sub

THIS DRAWING CONTAINS INFORMATION PROPRIETARY TO POSITRONIC IND. INC. ANY REPRODUCTION, DISCLOSURE OR USE OF THIS DRAWING IS EXPRESSLY PROHIBITED, EXCEPT AS POSITRONIC IND. INC. MAY OTHERWISE AGREE IN WRITING.

SK10857

DATE	REV	REVISION RECORD	APP	DR	CK
6-23 09	NC	ECO 31215	TK	TK	TK
8-5 09	A	ECO 31397	RCW	TK	TK

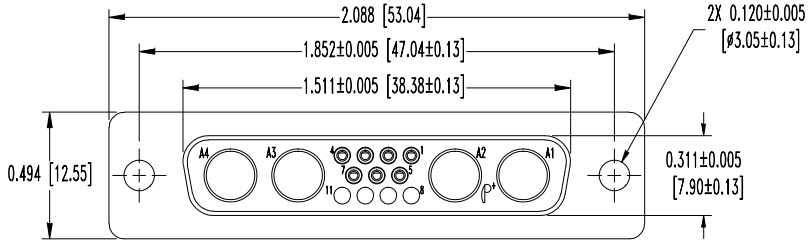

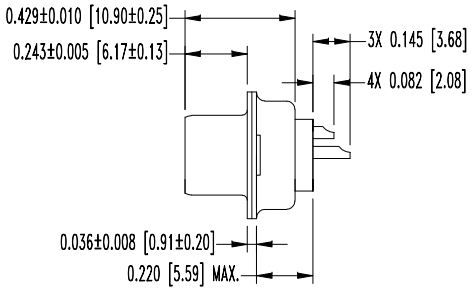

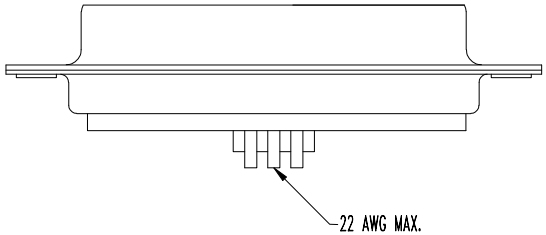

NOTES:
1. MATERIALS AND FINISHES:
   INSULATOR: GLASS FILLED POLYESTER PER MIL-M-24519, BLUE.
   CONTACTS: BRASS, GOLD FLASH OVER NICKEL PLATE.
   SHELLS: STEEL, ZINC PLATED WITH DICHROMATE SEAL.
2. ELECTRICAL CHARACTERISTICS:
   SIGNAL CONTACTS: CONTACT CURRENT RATING: 10 AMPERES NOMINAL.
   INITIAL CONTACT RESISTANCE: 0.008 OHMS MAXIMUM.
   INSULATOR RESISTANCE: 5 G OHMS.
   TEMPERATURE RANGE: -55°C TO +125°C.
3. CONNECTORS ARE RoHS COMPLIANT PER RoHS DIRECTIVE 2002/95/EC OF 27 JAN. 2003.
4. DIMENSIONS ARE IN INCHES [MILLIMETERS].

POSITRONIC INDUSTRIES INC.
SPRINGFIELD, MISSOURI 65801

DECIMAL TOL. ±0.015 [0.38]	QB SERIES	SCALE N.T.S.	DRAWN BY T.KEPLEY / APPROVED BY TK
	TITLE QB15W4S210000/AA		
ANGULAR TOL. ± 5°	DATE 6-23-09	DRAWING NUMBER SK10857	REV. NC

DIMENSIONS ARE IN INCHES [MILLIMETERS].
ALL DIMENSIONS ARE SUBJECT TO CHANGE.

Downloaded from Arrow.com.

Positronic Industries
connectpositronic.com

MicroTCA POWER
INPUT CONNECTORS

Combo-D
D-Sub

THIS DRAWING CONTAINS INFORMATION PROPRIETARY TO POSITRONIC AND ITS SUBSIDIARIES. POSITRONIC BELIEVES THE DATA ON THIS DRAWING TO BE RELIABLE. SINCE THE TECHNICAL INFORMATION IS GIVEN FREE OF CHARGE, THE USER EMPLOYS SUCH INFORMATION AT HIS OWN DISCRETION AND RISK. POSITRONIC ASSUMES NO RESPONSIBILITY FOR RESULTS OBTAINED OR DAMAGES INCURRED FROM USE OF SUCH INFORMATION IN WHOLE OR IN PART.

SK10527

DATE	REV	REVISION RECORD	APP	DR	CK
4-9-09	NC	ECO 30914	RCW	TK	TK
7-22-09	A	ECO 31338	TK	BS	TK

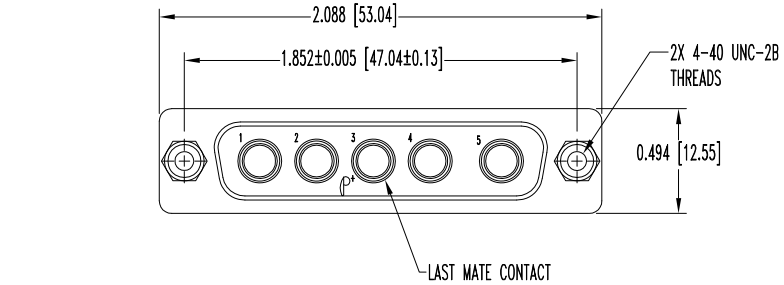

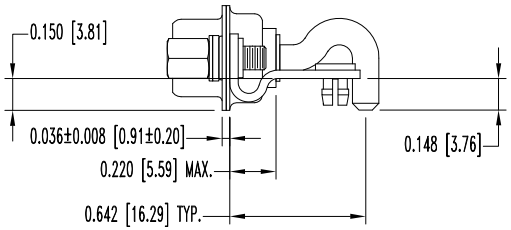

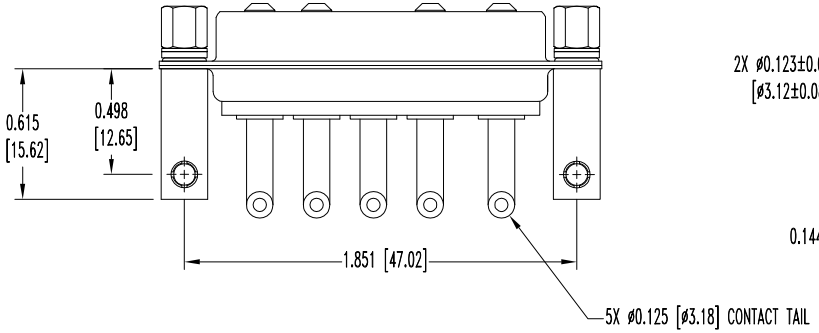

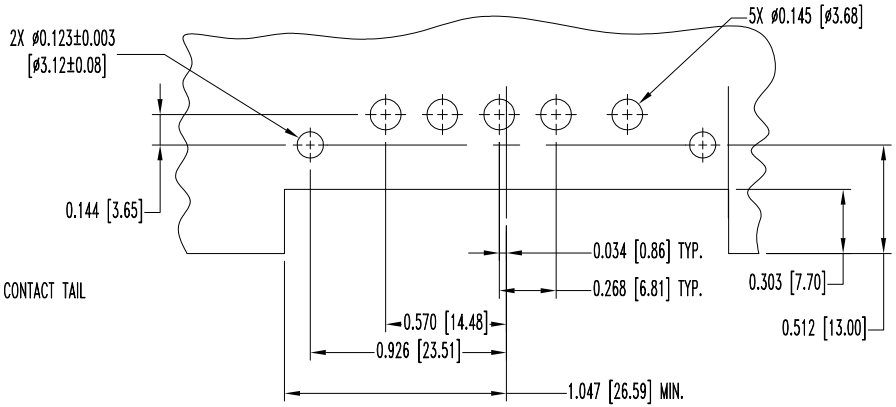

CONTACT HOLE PATTERN

NOTES:

1. MATERIALS AND FINISHES:
   - INSULATORS: GLASS FILLED POLYESTER PER MIL-M-24519, UL 94V-0, COLOR: BLUE.
   - POWER CONTACTS: HIGH CONDUCTIVITY COPPER ALLOY, GOLD FLASH OVER NICKEL PLATE.
   - SHELLS: STEEL, ZINC PLATE WITH CHROMATE SEAL.
   - MOUNTING BRACKETS: BRASS, ZINC PLATE WITH CHROMATE SEAL.
   - JACKSCREWS: STEEL, ZINC PLATE WITH CHROMATE SEAL.
   - WASHERS: BRASS, ZINC PLATE WITH CHROMATE SEAL.
   - RIVETS: BRASS, ZINC PLATE WITH CHROMATE SEAL.
   - PUSH FASTENERS: BERYLLIUM COPPER WITH TIN PLATE.
2. ELECTRICAL CHARACTERISTICS:
   - POWER CONTACTS: 50 AMPS MIN AT 30°C RISE.
     - INITIAL CONTACT RESISTANCE: 0.0005 OHMS MAX.
   - INSULATOR RESISTANCE: 5 G OHMS.
   - WORKING VOLTAGE: 300 V r.m.s.
3. TEMPERATURE RANGE: -55°C TO +125°C
4. CONNECTORS ARE ROHS COMPLIANT PER ROHS DIRECTIVE 2002/95/EC OF 27 JAN 2003.
5. DIMENSIONS ARE IN INCHES [MILLIMETERS].

POSITRONIC INDUSTRIES INC.
www.connectpositronic.com
FSCM 28198

DECIMAL TOL. ±0.015 [0.38]	QB SERIES	SCALE N.T.S.	DRAWN BY T.KEPLEY / APPROVED BY RCW
	TITLE QBH5W5M57R7NT20/AA		
ANGULAR TOL. ±5°	DATE 4-9-09	DRAWING NUMBER SK10527	REV. A

DIMENSIONS ARE IN INCHES [MILLIMETERS].
ALL DIMENSIONS ARE SUBJECT TO CHANGE.

Downloaded from Arrow.com.

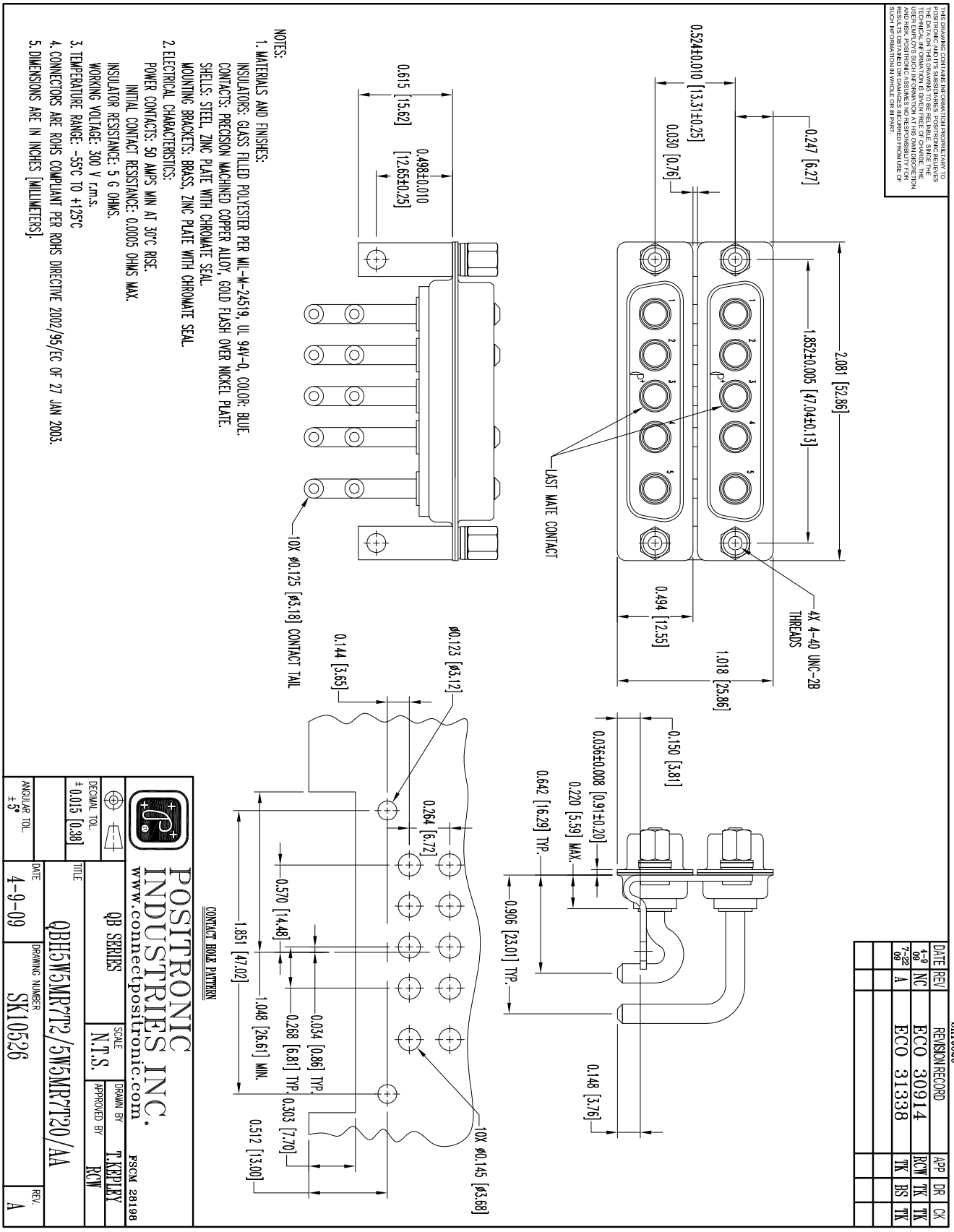

Downloaded from Arrow.com.

RIGHT ANGLE (90°) PRINTED BOARD MOUNT CONNECTOR - 48 VOLT

CONTACT POSITIONS A1 AND A2 ARE FIRST TO MATE. CONTACT POSITIONS 1 AND 2 ARE LAST TO MATE.

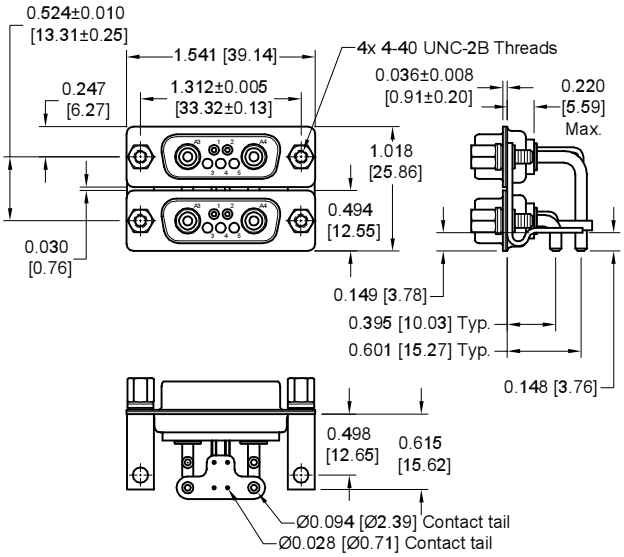

DUAL PORT
Typical part number:
QB7W2MR7T2/7W2MR7T20/AA

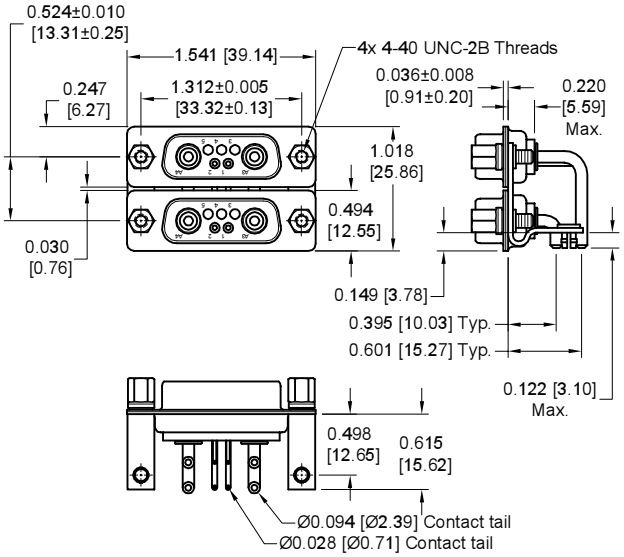

INVERTED DUAL PORT
Typical part number:
QB7W2MN7T2/7W2MN7T20/AA-1845.0

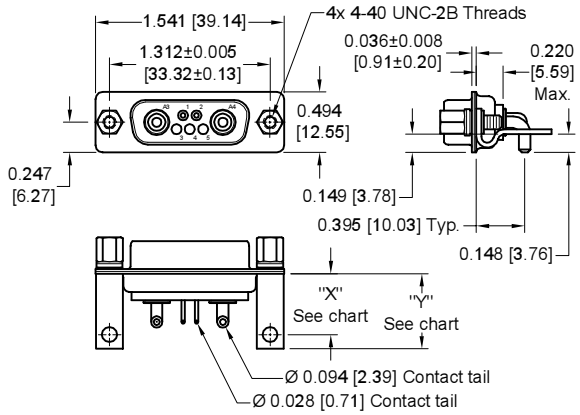

UNI PORT

The Dual Port and Uni Port connectors can also be supplied with standard D-subminiature mounting brackets, see page 53.

UNI PORT TYPICAL PART NUMBERS CODE 56				
TYPICAL PART NUMBER	X	Y	A	B
QB7W2M56R70T20	0.498 [12.65]	0.615 [15.62]	0.103 [2.62]	0.512 [13.00]
QB7W2M56R70T20-1865.0	0.395 [10.03]	0.512 [13.00]	0.000 [0.00]	0.409 [10.39]

RIGHT ANGLE (90°) PRINTED BOARD MOUNT CONTACT HOLE PATTERN - 48 VOLT

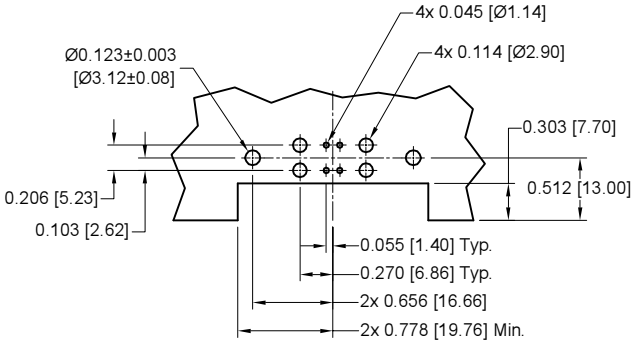

DUAL PORT

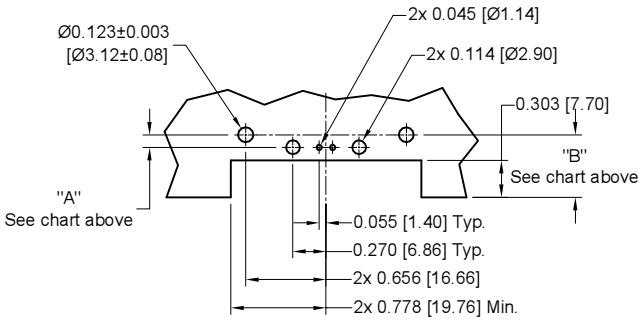

UNI PORT

DIMENSIONS ARE IN INCHES [MILLIMETERS].
ALL DIMENSIONS ARE SUBJECT TO CHANGE.

Downloaded from Arrow.com.

RIGHT ANGLE (90°) PRINTED BOARD MOUNT CONNECTOR - 24 VOLT

CONTACT POSITIONS A1 AND A4 ARE FIRST TO MATE. CONTACT POSITIONS 1 AND 2 ARE LAST TO MATE.

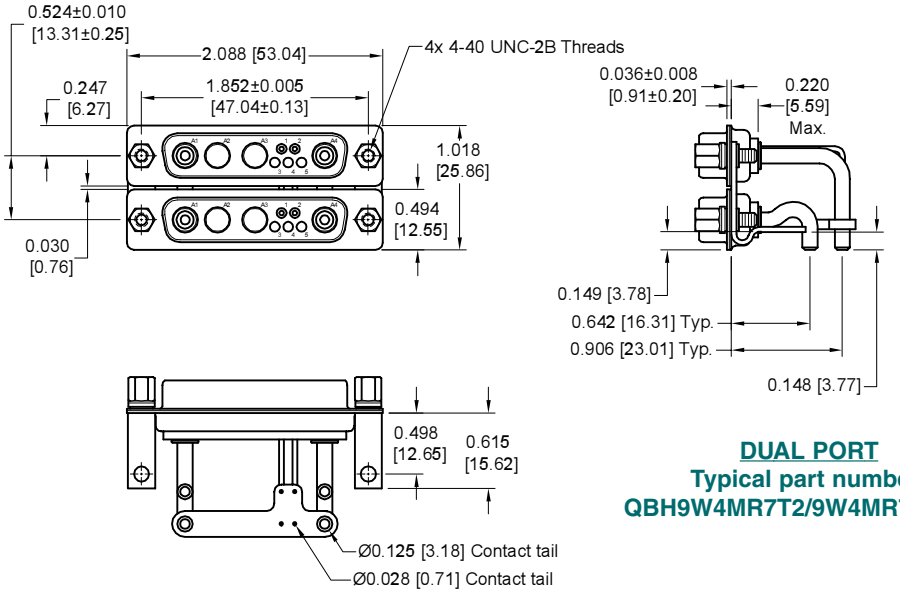

DUAL PORT
Typical part number:
QBH9W4MR7T2/9W4MR7T20/AA

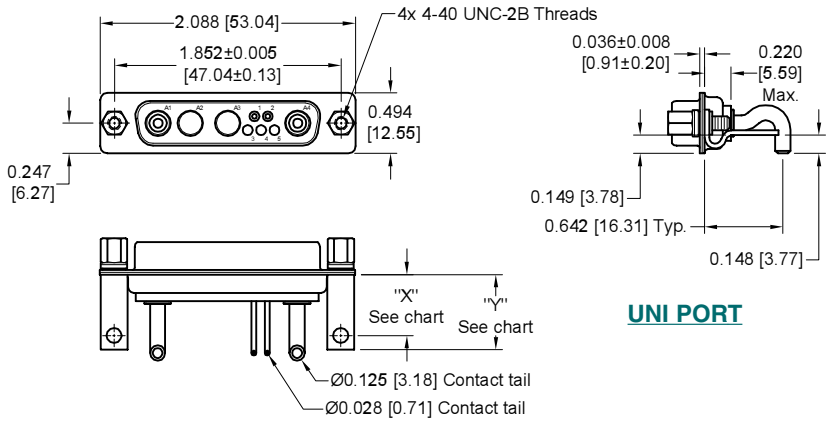

UNI PORT

The Dual Port and Uni Port connectors can also be supplied with standard D-subminiature mounting brackets, see page 53.

UNI PORT TYPICAL PART NUMBERS CODE 57

TYPICAL PART NUMBER	X	Y	A	B
QBH9W4M57R70T20/AA	0.498 [12.65]	0.615 [15.62]	0.144 [3.66]	0.512 [13.00]
QBH9W4M57R70T20/AA-1865.0	0.395 [10.03]	0.512 [13.00]	0.247 [6.27]	0.409 [10.39]

RIGHT ANGLE (90°) PRINTED BOARD MOUNT CONTACT HOLE PATTERN - 24 VOLT

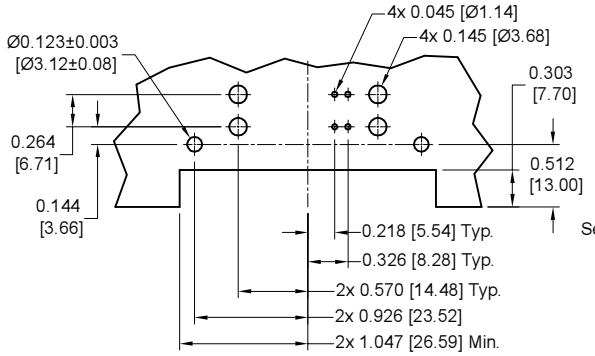

DUAL PORT

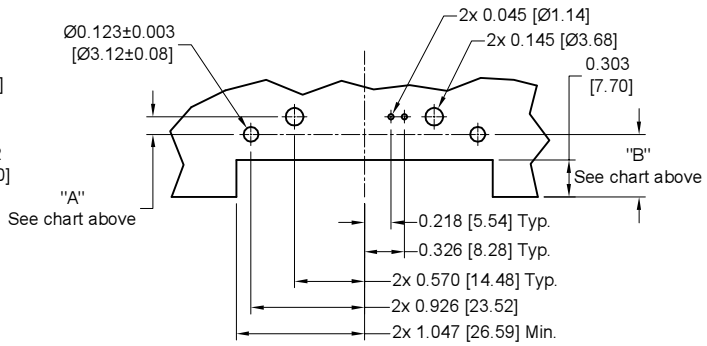

UNI PORT

DIMENSIONS ARE IN INCHES [MILLIMETERS].
ALL DIMENSIONS ARE SUBJECT TO CHANGE.

Downloaded from Arrow.com.

CABLE CONNECTOR

*1 CONTACTS ARE NOT SUPPLIED IN CONNECTOR AND NEED TO BE ORDERED SEPARATELY
SEE PAGES 54 FOR CONTACT PART NUMBERS

FEMALE CONTACTS ARE "TOUCH-SAFE" PER IEC 60950-1, FIGURE 2A.

*1 Note: Connectors can be kitted with all applicable crimp contacts, contact Technical Sales for connector part number.

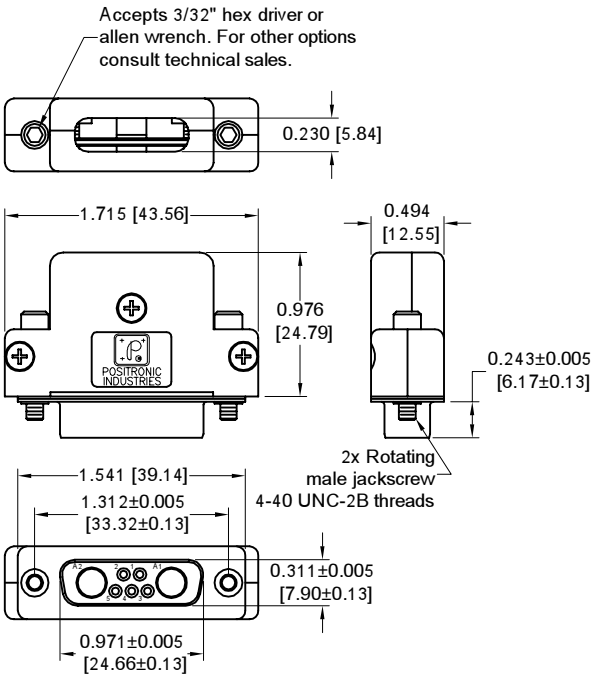

Typical part number: QB7W2S00QH0/AA

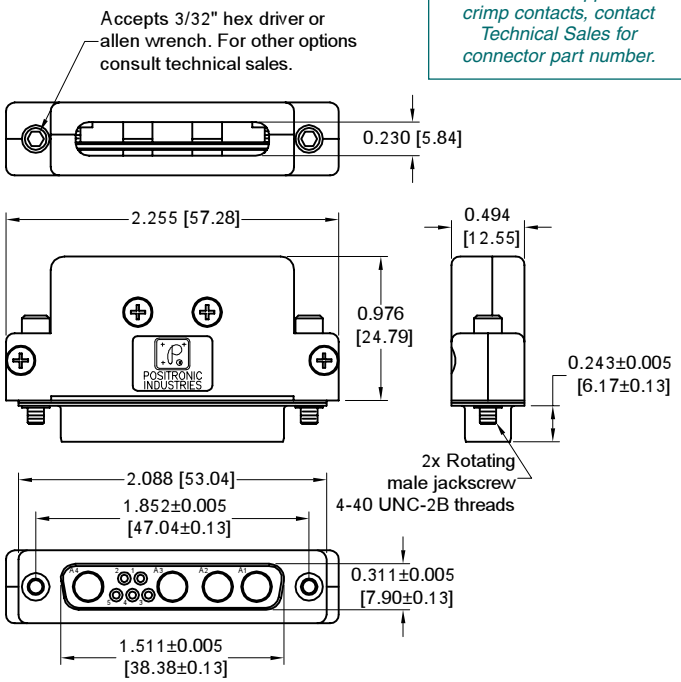

Typical part number: QB9W4S00QH0/AA

ELECTRICAL BRIDGE

MicroTCA applications may require contact positions 1 and 2 be electrically bridged.
Order part number CC2805/AA-V01

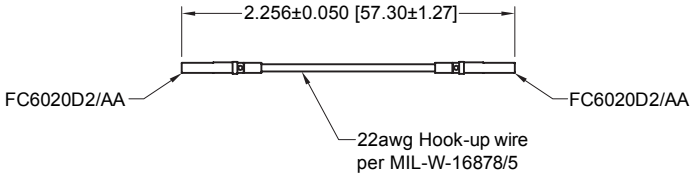

STANDARD D-SUBMINIATURE MOUNTING BRACKET

OPTIONAL MOUNTING BRACKET FOR DUAL PORT AND UNI PORT CONNECTORS

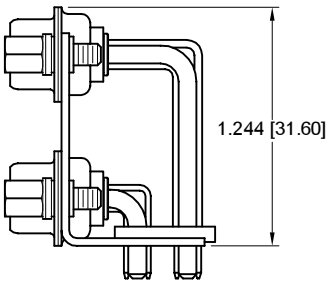

Dual Port and Uni Port connectors can be supplied with standard D-subminiature mounting brackets which allows the entire connector to set on top of the PCB.

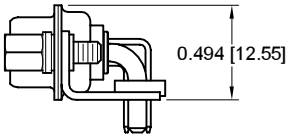

For more information on Dual Port connectors, see CBDP series on page 43.

For more information on Uni Port connectors, see CBD series on page 3.

DIMENSIONS ARE IN INCHES [MILLIMETERS].
ALL DIMENSIONS ARE SUBJECT TO CHANGE.

Downloaded from Arrow.com.

REMOVABLE CRIMP POWER CONTACTS

CODE 11 AND 12

*[1] CONTACTS ARE NOT SUPPLIED IN CONNECTOR AND NEED TO BE ORDERED SEPARATELY

*[1] Note: Connectors can be kitted with all applicable crimp contacts, contact Technical Sales for connector part number.

*[1] FEMALE CONTACT

"CLOSED ENTRY" DESIGN, L.S.A.

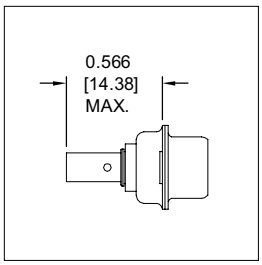

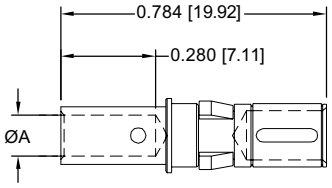

PART NUMBER	WIRE SIZE [AWG] mm²	ØA
FC4012D/AA-1817.0	12 [4.0]	0.101 [2.57]
FC4008D/AA-1817.0	8 [10.0]	0.181 [4.60]

MATERIAL: Copper alloy.

PLATING: *(choose contact plating based on individual application requirements)*
STANDARD FINISH: Gold flash over nickel plate.
OPTIONAL FINISHES: 0.000030 [0.76 µ] gold over nickel by adding "-14" suffix onto part number. Example: FC4012D/AA-14-1817.0.
0.000050 inch [1.27µ] gold over nickel by adding "-15" suffix onto part number. Example: FC4008D/AA-15-1817.0

*[1] **NOTE:** Female contacts feature Large Surface Area (L.S.A.) closed entry contact design which provides maximum mating surfaces between male and female contact and reduced contact resistance during operation.

For crimping information and crimp tools, see Application Tools section, page 81-89.

REMOVABLE CRIMP SIGNAL CONTACTS

CODE 0, 11 AND 12

*[1] CONTACTS ARE NOT SUPPLIED IN CONNECTOR AND NEED TO BE ORDERED SEPARATELY

*[1] Note: Connectors can be kitted with all applicable crimp contacts, contact Technical Sales for connector part number.

CLOSED CRIMP BARREL

FEMALE CONTACT

"CLOSED ENTRY" DESIGN

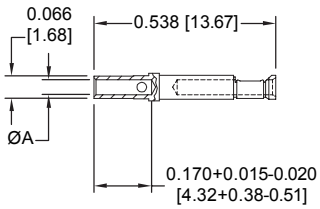

PART NUMBER	WIRE SIZE AWG/[mm²]	AØ
FC6020D2/AA	20 / 22 / 24 [0.5/0.3/0.25]	0.045 [1.14]

MATERIAL: Copper alloy.

PLATING: *(choose contact plating based on individual application requirements)*
STANDARD FINISH: Gold flash over nickel plate.
OPTIONAL FINISHES: 0.000030 [0.76 µ] gold over nickel by adding "-14" suffix onto part number. Example: FC6020D/AA-14.
0.000050 inch [1.27µ] gold over nickel by adding "-15" suffix onto part number. Example: Example: FC6020D/AA-15.

For crimping information and crimp tools, see Application Tools section, page 81-89.

Downloaded from Arrow.com.

MALE ORDERING INFORMATION - CODE NUMBERING SYSTEMS

SPECIFY COMPLETE CONNECTOR BY SELECTING AN OPTION FROM STEP 1 THROUGH 9

DUAL PORT CONNECTORS

STEP	1	2	3	4	5	6	7	8	9	10
EXAMPLE	QB	7W2	M	R7T2 /	7W2	M	R7T2	0	/AA	— -14

UPPER CONNECTOR

LOWER CONNECTOR

OPTIONS ARE THE SAME AS FOR UPPER CONNECTOR STEPS 2, 3, AND 4

STEP 1 - BASIC SERIES

QB Series (7W2 variant)
QBH Series (*5W5*, 9W4 and *15W4* variant)

STEP 2 - CONNECTOR VARIANTS

5W5, 7W2 , 9W4, *15W4*

STEP 3 - CONNECTOR GENDER

M - Male

STEP 4 - LOCKING, POLARIZING, MOUNTING AND PUSH-ON FASTENER SYSTEMS

0 – None
R6 – Bracket, Mounting, right angle (90°) Metal, Swaged to connector with 0.120 [3.05] Ø mounting hole with cross bar
R7 – Bracket, Mounting, right angle (90°) Metal, Swaged to connector with 4-40 threads with cross bar
R8 – Bracket, Mounting, right angle (90°) Metal, Swaged to connector with 4-40 locknut with cross bar
N6 – Bracket, Mounting, right angle (90°) Metal, Swaged to connector with 0.120 [3.05] Ø mounting hole with cross bar and push-on fastener
N7 – Bracket, Mounting, right angle (90°) Metal, Swaged to connector with 4-40 threads with cross bar and push-on fastener
N8 – Bracket, Mounting, right angle (90°) Metal, Swaged to connector with 4-40 locknut with cross bar and push-on fastener
T2 – Fixed Female Jackscrews

STEP 8 - SHELL OPTIONS

0 – Zinc Plated, with Chromate Seal.
*1 S – Stainless Steel, passivated.
X – Tin Plated.
Z – Tin Plated and Dimpled (male connectors only).

STEP 9 - ENVIRONMENTAL COMPLIANCE OPTIONS

/AA - Compliant per EU Directive 2002/95/EC (RoHS)

NOTE: This step should be included to create a standard part number. Example: QB7W2MR7T2/7W2MR7T20/AA

STEP 10 - SPECIAL OPTIONS

FOR SPECIAL OPTIONS, SEE SPECIAL OPTIONS APPENDIX ON PAGE 89.

NOTE: *1 For stainless steel dimpled male versions, contact Technical Sales.

For crimping information and crimp tools, see Application Tools section, pages 81-89.

MALE ORDERING INFORMATION - CODE NUMBERING SYSTEMS

SPECIFY COMPLETE CONNECTOR BY SELECTING AN OPTION FROM STEP 1 THROUGH 9

UNI PORT CONNECTORS

STEP	1	2	3	4	5	6	7	8	9	10
EXAMPLE	QB	7W2	M	56	R7	0	T2	0	/AA	— -14

STEP 1 - BASIC SERIES

QB Series (7W2 variant)
QBH Series (*5W5*, 9W4 and *15W4* variant)

STEP 2 - CONNECTOR VARIANTS

5W5, 7W2 , 9W4, *15W4*

STEP 3 - CONNECTOR GENDER

M - Male

STEP 4 - CONTACT TERMINATION

56 – Solder, Right Angle (90°) Printed Board Mount with Signal and 0.094 [2.39] Ø Power Contacts, 0.395 [10.03] Signal Contact Extension. ***Available for 7W2 variant.***
57 – Solder, Right Angle (90°) Printed Board Mount with Signal and 0.125 [3.18] Ø Power Contacts, 0.642 [16.29] Signal Contact Extension. ***Available for 5W5, 9W4 and 15W4 variants.***

STEP 5 - MOUNTING STYLE

R6 – Bracket, Mounting, right angle (90°) Metal, Swaged to connector with 0.120 [3.05] Ø mounting hole with cross bar
R7 – Bracket, Mounting, right angle (90°) Metal, Swaged to connector with 4-40 threads with cross bar
R8 – Bracket, Mounting, right angle (90°) Metal, Swaged to connector with 4-40 locknut with cross bar

NOTE: *1 For stainless steel dimpled male versions, contact Technical Sales.

STEP 6 - HOODS AND PUSH-ON FASTENERS

0 – None
N – Push-on Fastener, for Right Angle (90°) Mounting Brackets

STEP 7 - LOCKING AND POLARIZING SYSTEMS

T2 – Fixed Female Jackscrews.

STEP 8 - SHELL OPTIONS

0 – Zinc Plated, with Chromate Seal.
*1 S – Stainless Steel, passivated.
X – Tin Plated.
Z – Tin Plated and Dimpled (male connectors only).

STEP 9 - ENVIRONMENTAL COMPLIANCE OPTIONS

/AA - Compliant per EU Directive 2002/95/EC (RoHS)

Note: This step should be included to create a standard part number. Example: QB7W2M56R70T20/AA

STEP 10 - SPECIAL OPTIONS

FOR SPECIAL OPTIONS, SEE SPECIAL OPTIONS APPENDIX ON PAGE 89.

**DIMENSIONS ARE IN INCHES [MILLIMETERS].
ALL DIMENSIONS ARE SUBJECT TO CHANGE.**

Downloaded from Arrow.com.

FEMALE ORDERING INFORMATION - CODE NUMBERING SYSTEM

Specify Complete Connector By Selecting An Option From Step 1 Through 9

CABLE CONNECTORS

STEP	1	2	3	4	5	6	7	8	9	—	10
EXAMPLE	QB	7W2	S	0	0	Q	H	0	/AA	—	-14

STEP 1 - BASIC SERIES

QB Series

STEP 2 - CONNECTOR VARIANTS

7W2
9W4

STEP 3 - CONNECTOR GENDER

S - Female PosiBand Closed Entry Signal Contacts

Open Entry Signal Contacts are available and can be ordered separately, see page 73.

STEP 4 - CONTACT TERMINATION

0 – Connector ordered without contacts. Order signal and power contacts separately. See page 54 for contact part numbers.
1 – Signal contacts, 20 AWG-24 AWG [0.5mm²-0.25mm²].
11 – Signal contacts, 20 AWG-24 AWG [0.5mm²-0.25mm²] with FC4012D-1817.0 power contacts.
12 – Signal contacts, 20 AWG-24 AWG [0.5mm²-0.25mm²] with FC4008D-1817.0 power contacts.

STEP 5 - MOUNTING STYLE

0 – None

STEP 6 - HOODS

Q – Hood, Top Opening, Plastic

STEP 7 - LOCKING AND POLARIZING SYSTEMS

H – Rotating male jackscrew with internal hex for 3/32 hex drives.

STEP 8 - SHELL OPTIONS

0 – Zinc Plated, with Chromate Seal.
S – Stainless Steel, passivated.
X – Tin Plated.

STEP 9 - ENVIRONMENTAL COMPLIANCE OPTIONS

/AA - Compliant per EU Directive 2002/95/EC (RoHS)

Note: This step should be included to create a standard part number. Example: QB7W2S00QH0/AA

STEP 10 - SPECIAL OPTIONS

FOR SPECIAL OPTIONS, SEE SPECIAL OPTIONS APPENDIX ON PAGE 89.

For crimping information and crimp tools, see Application Tools section, pages 81-89.

NOTE: Once you have made a connector selection, contact Technical Sales if you would like to receive a drawing in DXF, PDF format or a 3-dimensional IGES, STEP, or SOLIDWORKS file.

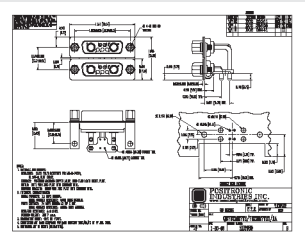

SK Drawing

3-dimensional model

Contact Technical Sales for ordering information for cable versions of the 5W5 and 15W4 variants.

Downloaded from Arrow.com.

Positronic Products

Power

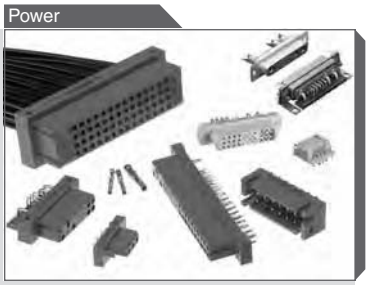

Contact Sizes: 0, 8, 12, 16, 20 and 22
Current Ratings: To 100 amperes
Terminations: Crimp, wire solder, straight solder, right angle (90°) solder, straight press-fit and right angle (90°) press-fit
Configurations: Multiple variants in a variety of package sizes
Compliance: PICMG 2.11, PICMG 3.0, VITA 41

FEATURES: Hot swap capability • AC/DC operation in a single connector • Signal contacts for hardware management • Blind mating • Sequential mating • Large surface area contact mating system • Wide variety of accessories • Customer specified contact arrangements

D-subminiature

Contact Sizes: 8, 16, 20 and 22
Current Ratings: To 40 amperes nominal
Terminations: Crimp, wire solder, straight solder, right angle (90°) solder and straight press-fit
Configurations: Multiple variants in both standard and high densities
Qualifications: MIL-DTL-24308, Goddard Space Flight S-311-P, SAE AS 39029, IP65, IP67

FEATURES: Four performance levels available: professional, industrial, military and space-flight quality for best cost/performance ratio • Options include thermocouple contacts, air coupling, environmentally sealed and dual port package including mixed density • Broad selection of accessories

Rectangular

Contact Sizes: 16, 20 and 22
Current Ratings: To 13 amperes
Terminations: Crimp, wire solder, straight solder and right angle (90°) solder
Configurations: Multiple variants in both standard and high densities
Qualifications: MIL-DTL-28748, SAE AS 39029, CCITT V.35

FEATURES: Two performance levels available: industrial quality and military quality provide two performance to cost choices • Large surface area contact mating system • A wide variety of accessories • Broad selection of contact variants and package sizes

Circular

Contact Sizes: 12, 16, 20 and 22
Current Ratings: To 25 amperes nominal
Terminations: Crimp, wire solder, straight solder and right angle (90°) solder
Configurations: Multiple variants
Qualifications: Environmental protection to IP67

FEATURES: Non-corrodible / lightweight composite construction • EMI/RFI shielded versions • Thermocouple contacts • Environmentally sealed versions • Rear insertion/front release of removable contacts • Two level sequential mating • Overmolding available on full assemblies

Cable

All Positronic connector products can be supplied as part of cable assemblies whose technical characteristics would reflect those of the connectors being used within the assembly.

FEATURES: Shorten the supply chain and reduce additional costs and delays by “cablizing” • Overmolding available • Shielded and environmentally sealed versions available • Power cables and access boxes which meet the SAE J2496 specification

Hermetic

Contact Sizes: 8, 12, 16, 20 and 22
Current Ratings: To 40 amperes nominal
Terminations: Feedthrough is standard; flying leads and board mount available upon request
Configurations: See D-subminiature and circular configurations above
Qualifications: Space-D32

FEATURES: Intended for use as an electrical feedthrough in high vacuum applications • Leakage rate: 5 x 10-9 mbar.l/s @ vacuum 1.5 x 10-5 atm • Signal, power, coax and high voltage versions available • Connectors can be mounted on flange assembly per customer specification

For more information, visit www.connectpositronic.com or call your nearest Positronic sales office as given on the back of this catalog.

Downloaded from Arrow.com.

NORTH AMERICAN LOCATIONS

UNITED STATES, Springfield, Missouri, Corporate Headquarters
Factory Sales and Engineering Offices (800) 641-4054

PUERTO RICO, Ponce Factory
Factory Sales and Engineering Offices (800) 641-4054

MEXICO
Factory Sales and Engineering Offices (800) 872-7674

CANADA
Factory Sales and Engineering Offices (800) 327-8272

ASIA/PACIFIC LOCATIONS

SINGAPORE, Asia/Pacific Headquarters
Factory Sales and Engineering Offices (65) 6842 1419 singapore@connectpositronic.com

ASIA, Direct Sales Offices

China -Shenzhen Sales Office	(86) 755 2643 7578	shenzhen@connectpositronic.com
China -Shanghai Sales Office	(86) 158 2907 9779	shanghai@connectpositronic.com
China -Xian/Beijing Sales Office	(86) 29 8839 5306	xian@connectpositronic.com
Korea Sales Office	(82) 31 909 8047 or 8	korea@connectpositronic.com
Taiwan Sales Office	(88) 62 2937 8775	taiwan@connectpositronic.com

JAPAN, Direct Sales Offices
Sales and Engineering Offices (81) 3 5812 7720 japan@connectpositronic.com

INDIA, Direct Sales Offices

Factory Sales and Engineering Offices	(91) 20 2439 4810	india@connectpositronic.com
Bangalore Sales Office		bangalore@connectpositronic.com
New Delhi Sales Office		delhi@connectpositronic.com

ASIA/PACIFIC, Technical Agents
Technical Agents in Malaysia, Australia, New Zealand, Philippines, Hong Kong, Vietnam, Thailand

EUROPEAN LOCATIONS

FRANCE, Auch Factory, European Headquarters
Factory Sales and Engineering Offices 33 5 62 63 44 91 contact@connectpositronic.com

EUROPE, Direct Sales Offices

Northern France Sales Office	33 1 45 88 13 88	jchalaux@connectpositronic.com
Southern France Sales Office	33 5 62 63 44 91	plafon@connectpositronic.com
Italy Sales Office	39 02 54 1161 06	rmagni@connectpositronic.com
Germany Sales Office	49 2351 63 47 39	cbouche@connectpositronic.com
UK Sales Office	44 1993 831 939	lbridwell@connectpositronic.com

EUROPE, Technical Agents
Technical Agents in Austria, Benelux, Eastern Europe Countries, Greece, Ireland, Scandinavia, Spain, Switzerland and the United Kingdom

MIDEAST, Technical Agents
Technical Agents in Israel and Turkey

POSITRONIC™
GLOBAL Connector SOLUTIONS

POSITRONIC INDUSTRIES, INC.

423 N Campbell Avenue • PO Box 8247 • Springfield, MO 65801
Tel (417) 866-2322 • Fax (417) 866-4115 • Toll Free (800) 641-4054
info@connectpositronic.com

POSITRONIC INDUSTRIES, S.A.S.

Zone Industrielle d'Engachies • 46 Route d'Engachies
France 32020 Auch Cedex 9
Telephone 33 5 62 63 44 91 • Fax 33 5 62 63 51 17
contact@connectpositronic.com

POSITRONIC ASIA PTE LTD.

3014A Ubi Road 1 #07-01 • Singapore 408703
Telephone (65) 6842 1419 • Fax (65) 6842 1421
singapore@connectpositronic.com

LOCATIONS

www.connectpositronic.com

Downloaded from Arrow.com.