High Speed Transmission, 0.8mm Pitch Connectors for PCB Connections

FX18 Series

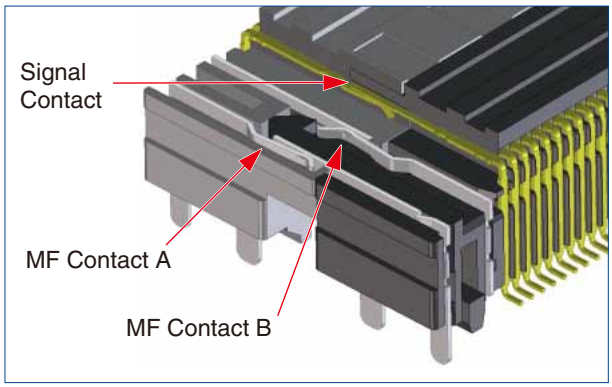

■Features

- **0.8mm pitch**
- **Connection type : Coplanar /right angle / parallel (height : 10 to 45mm)**
- **No of pos.: 40, 60, 80, 100, 120, 140**
- **MF (multi-functional) contact**
  The FX18 series utilizes guideposts on both sides of the connector. These guide posts double as multi-functional contacts as well as an aligning structure.
  1) Enhanced ground connections between PCB's
  2) Capable of being used as power source lines (3 A/line)
  3) A sequenced 3-level structure that contains signal contacts
- **Effective mating length of 2mm (Signal contact)**
  This connector utilizes a 2.0mm effective mating length for its signal contacts and provides a sufficient amount of margin for its mating sequence. (MF contact A : 2.5mm/ MF contact B : 1.5mm)
- **Resistant to excess mating force**
  The structure is equipped with dip contacts that help prevent damage caused by excessive mating forces and provides stability to both sides of the connector.
- **Simplified mating with large guides**
  Generous lead-in shape simplifies the mating operation. (lead in opening amount : ± 1mm). The guides also prevent inverse mating.

■High speed transmission characteristics

- **ICR (Insertion-loss-to-Crosstalk-Ratio)**
  Enough margin with regulated ICR data of IEEE802.3ap 10 Gbps transmission standard.
- **Differential impedance data**
  With a strict time of Tr = 35ps, its contact structure matches 100 Ohm ±10% differential impedance.

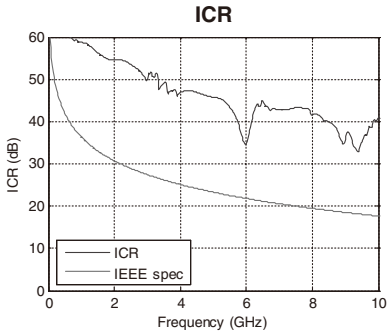

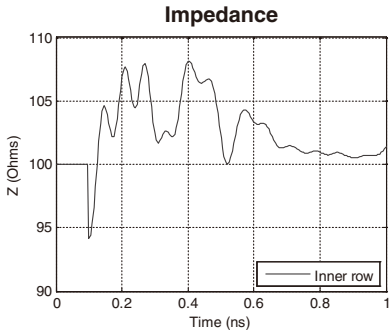

■Mating variation diagram

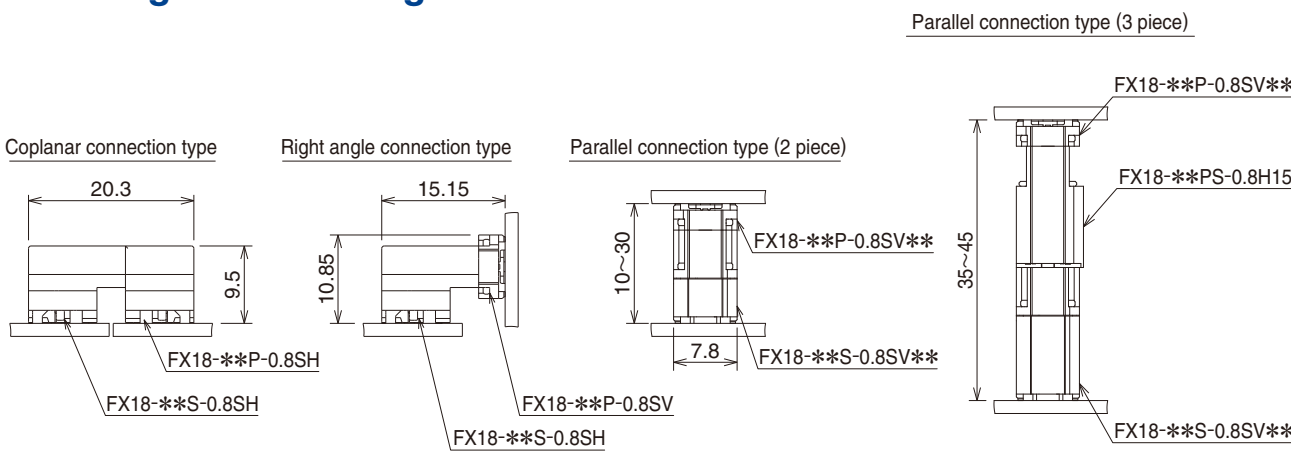

Jul.1.2026 Copyright 2026 HIROSE ELECTRIC CO., LTD. All Rights Reserved.

Downloaded from Arrow.com.

■Product Specifications

Ratings	Rated Current 0.5A (signal contacts) 3.0A (MF contact) (Note 3) Rated Voltage AC100V	Operating Temperature Range : -55～85℃ (Note 1) Storage Temperature Range : -10～60℃ (Note 2)

Item	Specifications	Conditions
1. Contact Resistance	Maximum of 90mΩ	Measured with 100mA
2. Insulation Resistance	Minimum of 1,000MΩ	Measured with DC 250V
3. Withstanding Voltage	No flashover or breakdown	Electrification for 1 minutes at AC 300V
4. Durability	Contact Resistance: Maximum of 100mΩ	500 mating cycles
5. Vibration Resistance	No electrical discontinuity of 1μ or greater	10 cycles each for the three axial directions (1 cycle = 5 minutes) at frequency 10-55 Hz, half amplitude 0.75mm
6. Shock Resistance	No electrical discontinuity of 1μ or greater	Acceleration: 490m/s^2, Retention time: 11ms, Semi-sinusoidal 3 axes both directions 3 times each.
7. Humidity Resistance	Contact Resistance:Maximum of 100mΩ Insulation Resistance: Minimum of 1,000MΩ	96 hours at temperature : 40℃ and humidity : 90～95%
8. Temperature Cycles	Contact Resistance: Maximum of 100mΩ Insulation Resistance: Minimum of 1,000MΩ	Temperature -55 ℃ → 85℃ Time 30 → 30 minutes 5 cycles

(Note 1) Includes the temperature rise of power lines
(Note 2) The term “storage” refers to the long-term storage condition of unused products before PCB mounting.
(Note 3) Rated current is per contact.

■Materials

●Right angle receptacle/right angle header/straight header

Component	Materials	Color/Finish	Specifications
Insulator	Polyamide resin	Black	UL94V-0
Signal Contact	Phosphorous bronze	Contact part : Gold plating Mounting part : Gold plating	————
MF Contact	Phosphorous bronze	Contact part : Gold plating Mounting part : Pure tin plating	————

●Straight header 10mm height /Straight receptacle 15mm and 20mm heights

Component	Materials	Color/Finish	Specifications
Insulator	Polyamide resin	Black	UL94V-0
Signal Contact	Phosphorous bronze	Contact part : Gold plating Mounting part : Gold plating	————
MF Contact	Copper alloy	Contact part : Gold plating Mounting part : Pure tin plating	————

●Straight receptacle 10mm height

Component	Materials	Color/Finish	Specifications
Insulator	Polyamide resin	Black	UL94V-0
Signal Contact	Copper alloy	Contact part : Gold plating Mounting part : Gold plating	————
MF Contact	Copper alloy	Contact part : Gold plating Mounting part : Pure tin plating	————

●Interposer 15mm height

Component	Materials	Color/Finish	Specifications
Insulator	Polyamide resin/PBT resin	Black	UL94V-0
Signal Contact	Copper alloy	Contact part : Gold plating	————
MF Contact	Copper alloy	Contact part : Gold plating	————

Jul.1.2026 Copyright 2026 HIROSE ELECTRIC CO., LTD. All Rights Reserved.

Downloaded from Arrow.com.

■Product Number Structure

Refer to the charts below for determining specific part number characteristics.
Please select connectors listed in this catalog when placing orders and be sure to check the latest delivery specifications at the time of ordering the product.

●Right angle receptacle

FX18 - 60 S - 0.8 SH
❶ ❷ ❸ ❹ ❺

●Straight receptacle

FX18 - 60 S - 0.8 SV 15
❶ ❷ ❸ ❹ ❺ ❻

●Right angle header

FX18 - 60 P - 0.8 SH
❶ ❷ ❸ ❹ ❺

● Interposer

FX18 - 60 PS - 0.8 H 15
❶ ❷ ❸ ❹ ❺ ❻

●Straight header

FX18 - 60 P - 0.8 SV 10
❶ ❷ ❸ ❹ ❺ ❻

❶ Series Name	: FX18	
❷ No. of Contacts		
❸ Connector Type	S : Receptacle type P : Header type	
❹ Contact Pitch	: 0.8mm	
❺ Product Shape	SH : Right angle type SV : Straight type H : Interposer type	
❻ Stacking Height		

■FX18 Series Mating Diagram

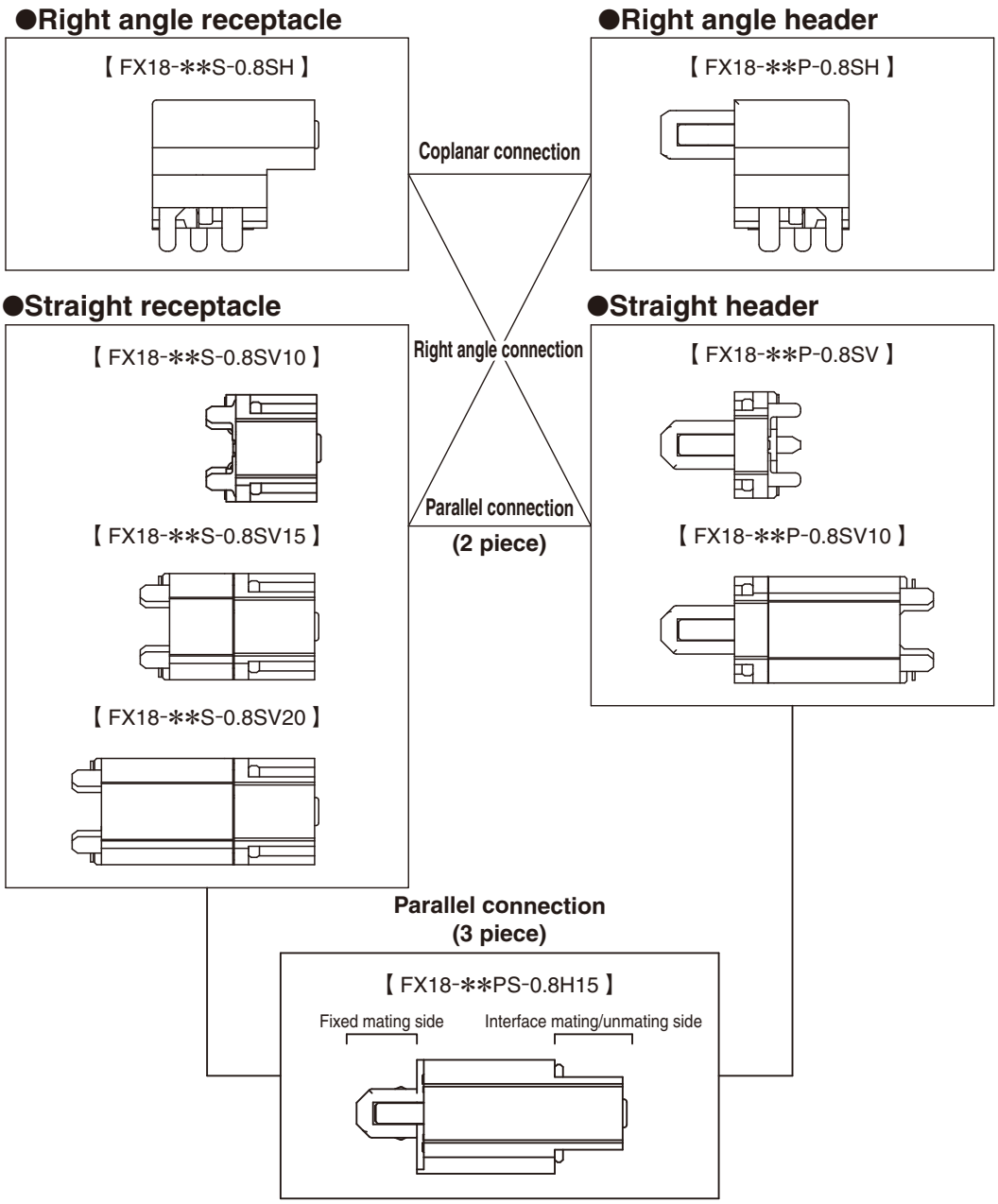

Jul.1.2026 Copyright 2026 HIROSE ELECTRIC CO., LTD. All Rights Reserved.

Downloaded from Arrow.com.

■2 piece Parallel Connection Type

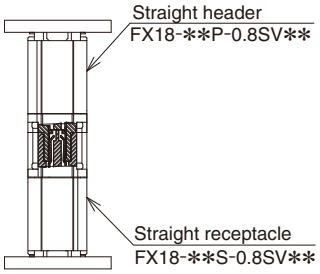

Stack height variation table (2 piece)

	FX18-**P-0.8SV	FX18-**P-0.8SV10
FX18-**S-0.8SV10	10mm	20mm
FX18-**S-0.8SV15	15mm	25mm
FX18-**S-0.8SV20	20mm	30mm

■3 piece parallel connection type

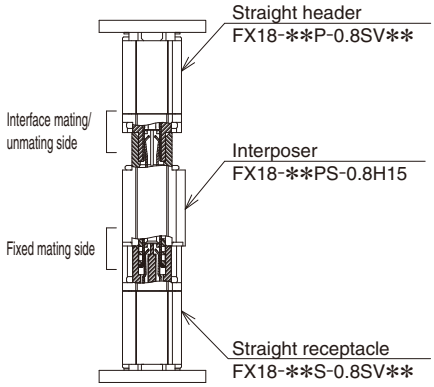

Stack height variation table (3 pieces)

	FX18-**PS-0.8H15	
	FX18-**P-0.8SV	FX18-**P-0.8SV10
FX18-**S-0.8SV10	25mm	35mm
FX18-**S-0.8SV15	30mm	40mm
FX18-**S-0.8SV20	35mm	45mm

◆SI Data

●Contact assignment

We recommend the following contact configuration to match 100 ohm differential impedance and reduce crosstalk.

Contact assignment (40 pos.)

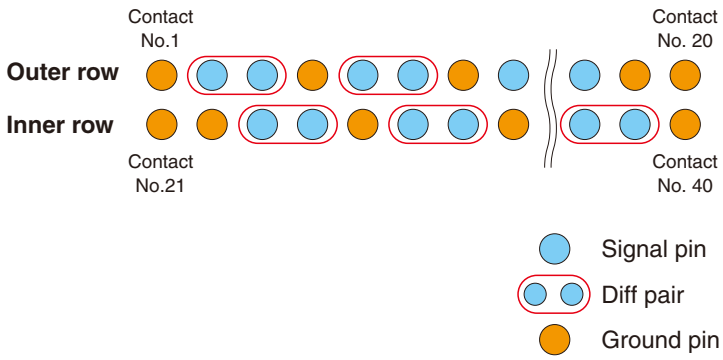

Coplanar connection type showing signal contact shape

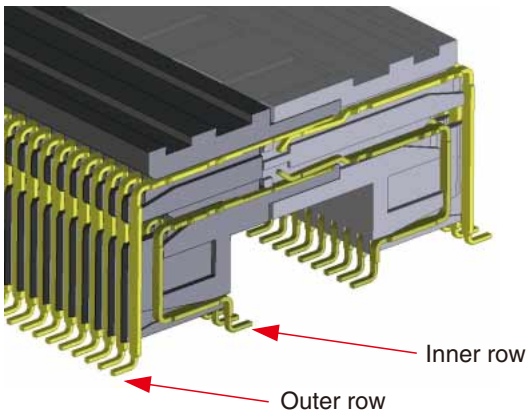

● Impedance

Satisfies 100Ω ±10% at Tr = 35 ps

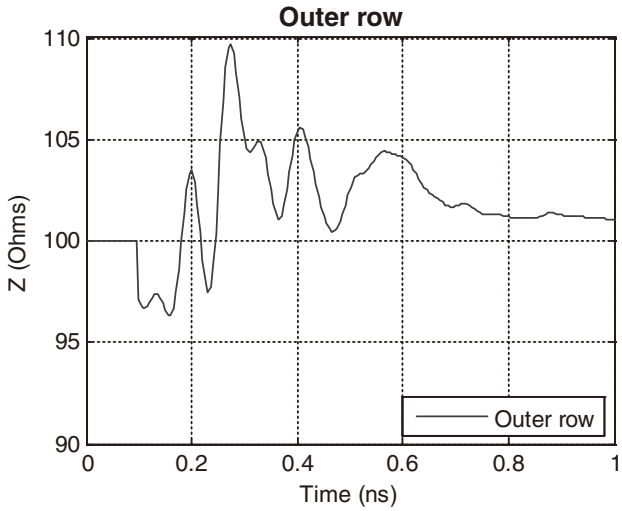

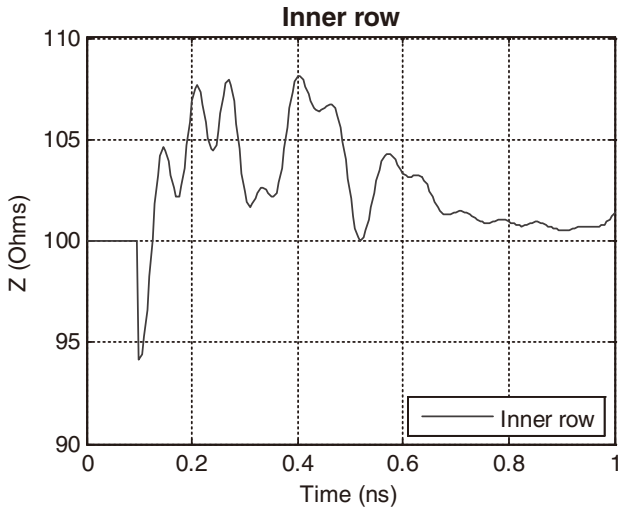

Jul.1.2026 Copyright 2026 HIROSE ELECTRIC CO., LTD. All Rights Reserved.

Downloaded from Arrow.com.

●Insertion loss

Maintains a good insertion loss of up to 10 GHz

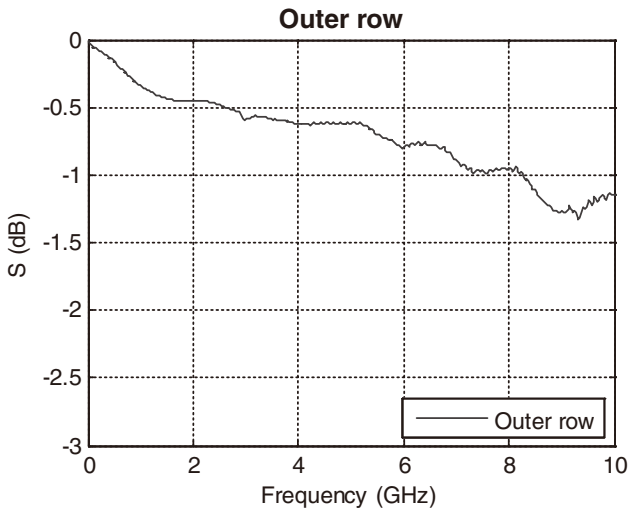

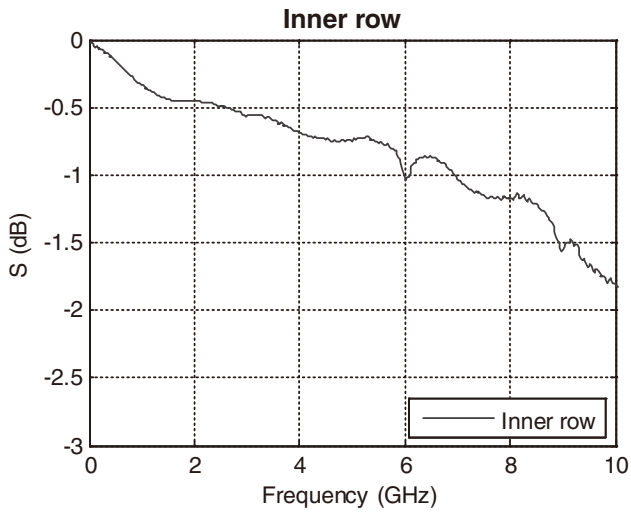

● Return loss

Enough margin to satisfy IEEE802.3ap 10 Gbps transmission protocol.

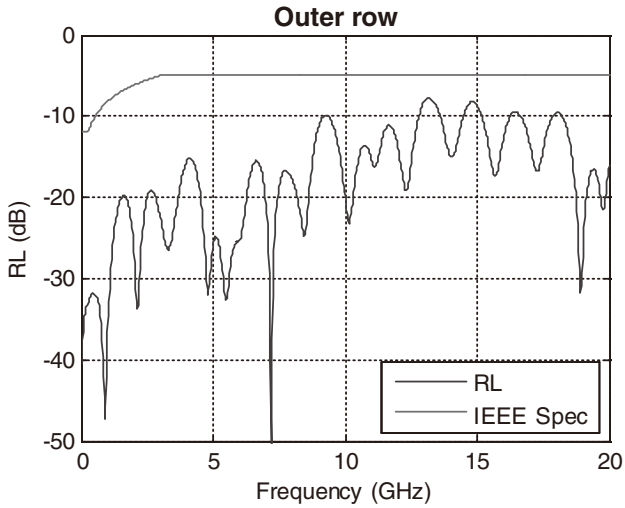

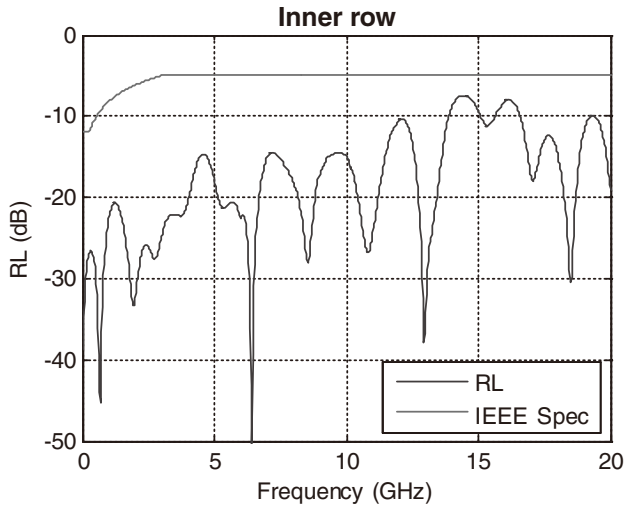

●NEXT

Lower crosstalk up to 10 GHz

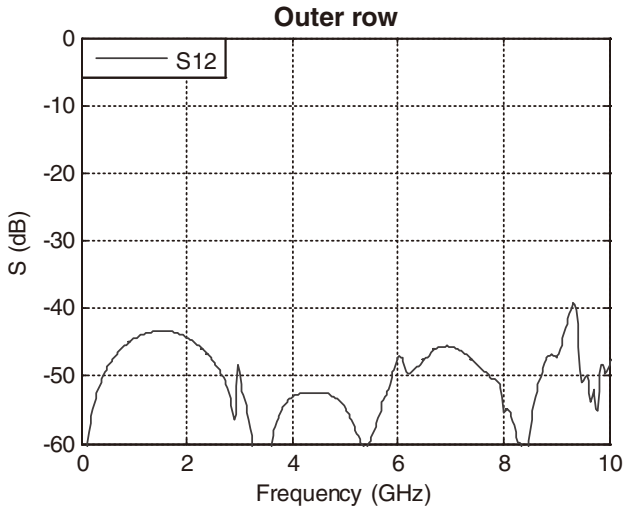

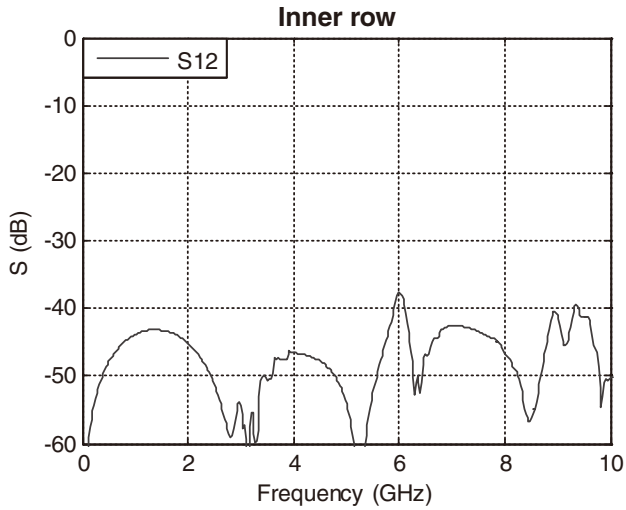

Jul.1.2026 Copyright 2026 HIROSE ELECTRIC CO., LTD. All Rights Reserved.

Downloaded from Arrow.com.

Contact assignment (40 pos.)

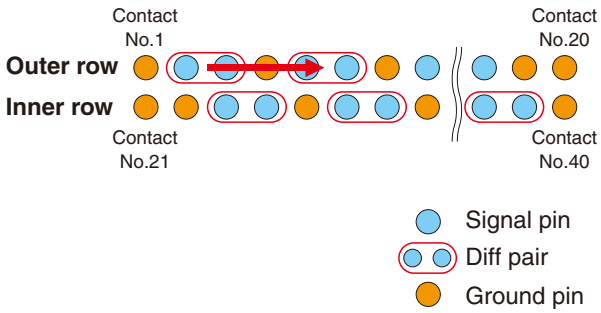

Fig 1.

Contact assignment (40 pos.)

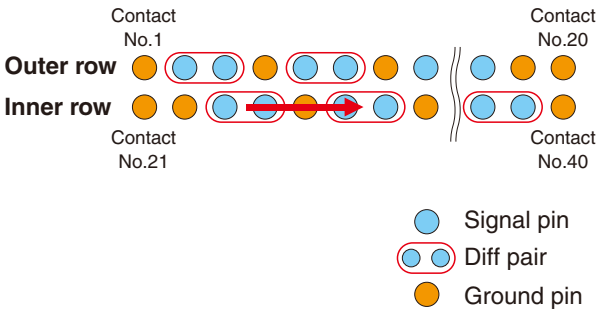

Fig 2.

●FEXT

Lower crosstalk up to 10 GHz

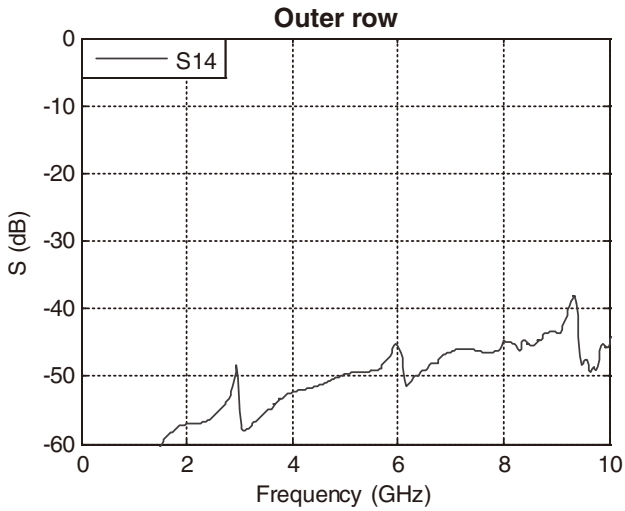

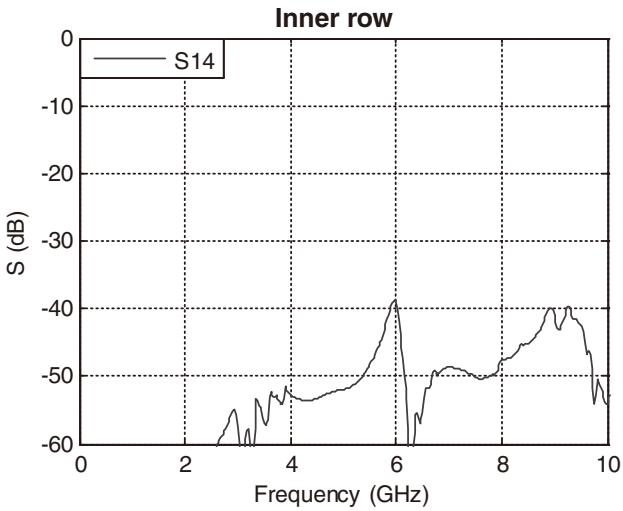

●ICR-FEXT

Enough margin to satisfy IEEE802.3ap 10 Gbps transmission protocol.

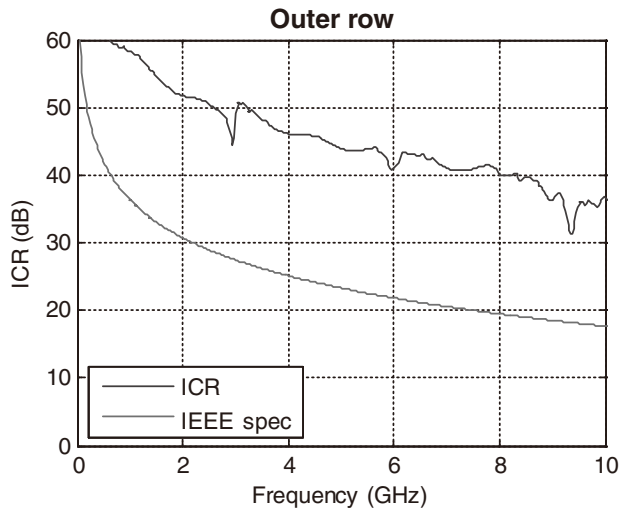

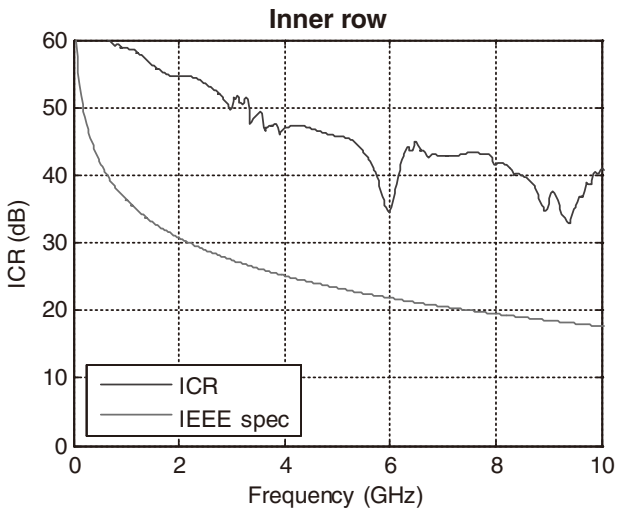

Jul.1.2026 Copyright 2026 HIROSE ELECTRIC CO., LTD. All Rights Reserved.

Downloaded from Arrow.com.

●Right angle receptacle

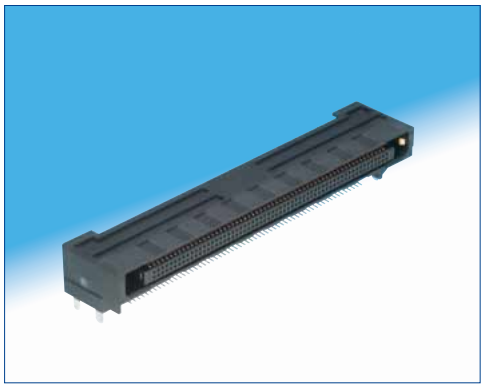

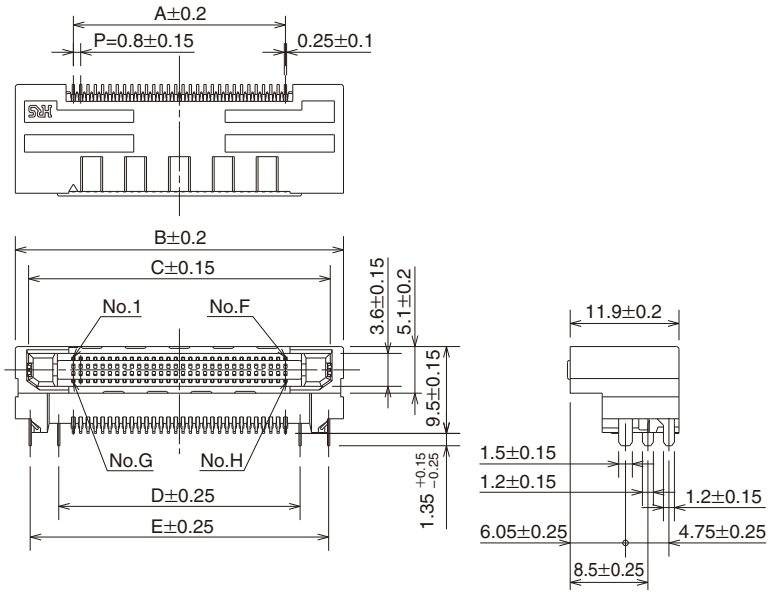

Unit : mm

Part No.	HRS No.	A	B	C	D	E	F	G	H (No. of contacts)
FX18-40S-0.8SH	579-0009-4	15.2	27.9	25.0	18.4	24.65	20	21	40
FX18-60S-0.8SH	579-0010-3	23.2	35.9	33.0	26.4	32.65	30	31	60
FX18-80S-0.8SH	579-0011-6	31.2	43.9	41.0	34.4	40.65	40	41	80
FX18-100S-0.8SH	579-0012-9	39.2	51.9	49.0	42.4	48.65	50	51	100
FX18-120S-0.8SH	579-0013-1	47.2	59.9	57.0	50.4	56.65	60	61	120
FX18-140S-0.8SH	579-0014-4	55.2	67.9	65.0	58.4	64.65	70	71	140

●Right angle header

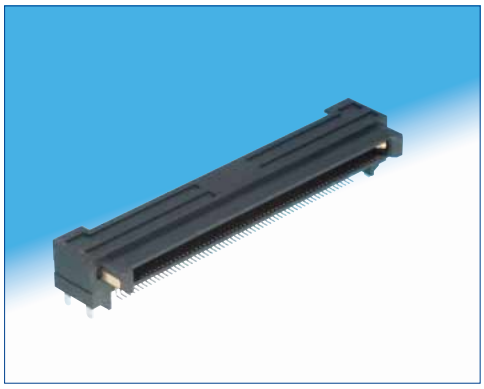

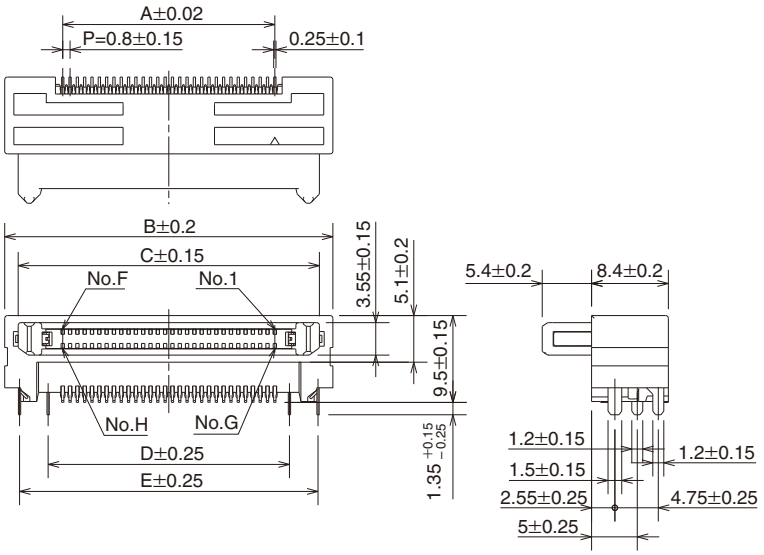

Unit : mm

Part No.	HRS No.	A	B	C	D	E	F	G	H (No. of contacts)
FX18-40P-0.8SH	579-0002-5	15.2	27.9	24.95	18.4	24.65	20	21	40
FX18-60P-0.8SH	579-0003-8	23.2	35.9	32.95	26.4	32.65	30	31	60
FX18-80P-0.8SH	579-0004-0	31.2	43.9	40.95	34.4	40.65	40	41	80
FX18-100P-0.8SH	579-0005-3	39.2	51.9	48.95	42.4	48.65	50	51	100
FX18-120P-0.8SH	579-0006-6	47.2	59.9	56.95	50.4	56.65	60	61	120
FX18-140P-0.8SH	579-0007-9	55.2	67.9	64.95	58.4	64.65	70	71	140

Jul.1.2026 Copyright 2026 HIROSE ELECTRIC CO., LTD. All Rights Reserved.

Downloaded from Arrow.com.

●Straight header

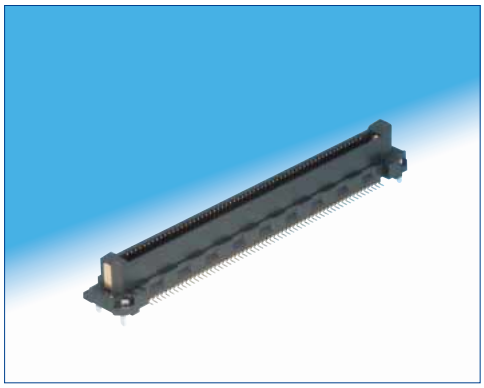

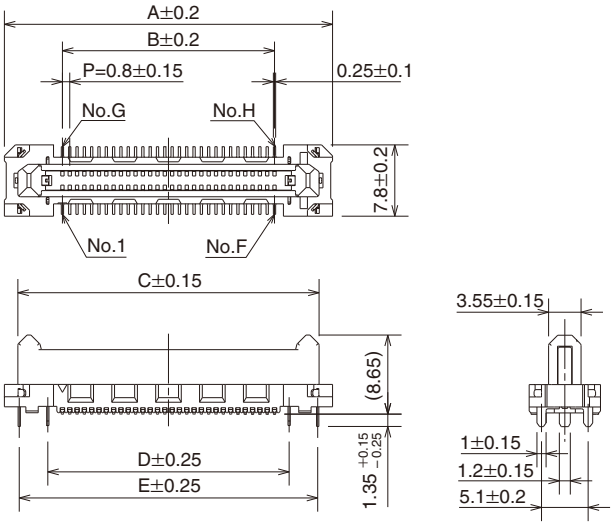

Unit : mm

Part No.	HRS No.	A	B	C	D	E	F	G	H (No of contacts)
FX18-40P-0.8SV	579-0016-0	27.9	15.2	24.95	18.4	24.65	20	21	40
FX18-60P-0.8SV	579-0017-2	35.9	23.2	32.95	26.4	32.65	30	31	60
FX18-80P-0.8SV	579-0018-5	43.9	31.2	40.95	34.4	40.65	40	41	80
FX18-100P-0.8SV	579-0019-8	51.9	39.2	48.95	42.4	48.65	50	51	100
FX18-120P-0.8SV	579-0020-7	59.9	47.2	56.95	50.4	56.65	60	61	120
FX18-140P-0.8SV	579-0021-0	67.9	55.2	64.95	58.4	64.65	70	71	140

● Straight header (10mm stack height)

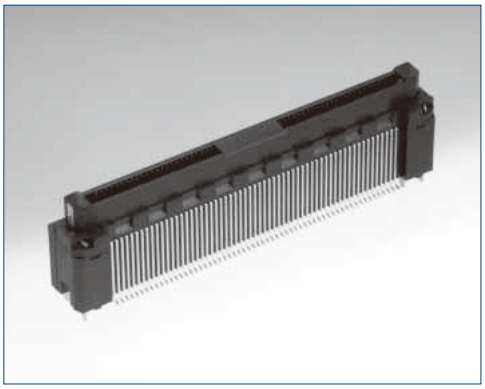

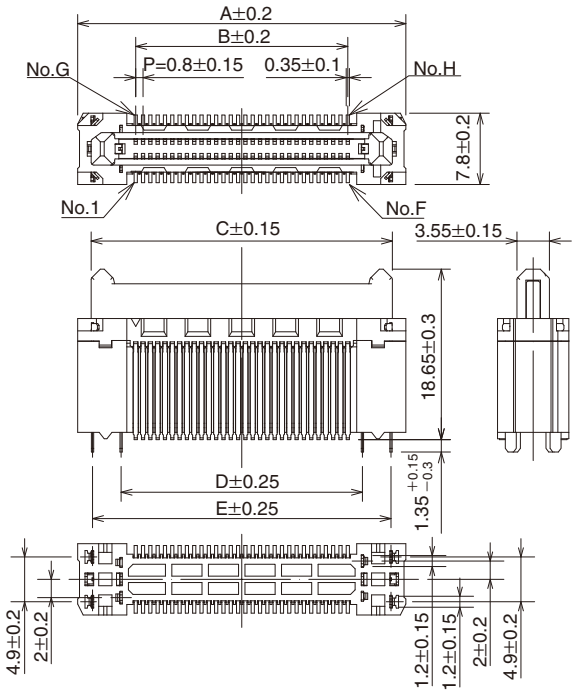

Unit : mm

Part No.	HRS No.	A	B	C	D	E	F	G	H (No of contacts)
FX18-40P-0.8SV10	579-0022-2	27.9	15.2	24.95	18.4	24.65	20	21	40
FX18-60P-0.8SV10	579-0023-5	35.9	23.2	32.95	26.4	32.65	30	31	60
FX18-80P-0.8SV10	579-0024-8	43.9	31.2	40.95	34.4	40.65	40	41	80
FX18-100P-0.8SV10	579-0034-1	51.9	39.2	48.95	42.4	48.65	50	51	100
FX18-120P-0.8SV10	579-0025-0	59.9	47.2	56.95	50.4	56.65	60	61	120
FX18-140P-0.8SV10	579-0035-4	67.9	55.2	64.95	58.4	64.65	70	71	140

Jul.1.2026 Copyright 2026 HIROSE ELECTRIC CO., LTD. All Rights Reserved.

Downloaded from Arrow.com.

●Straight receptacle (10mm stack height)

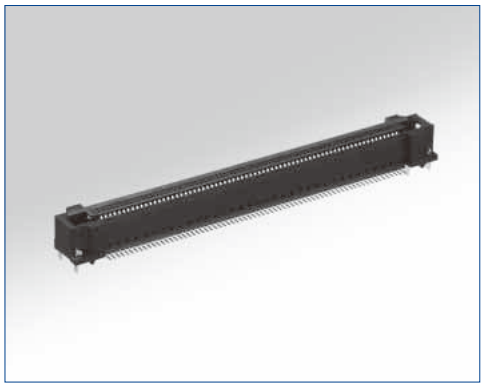

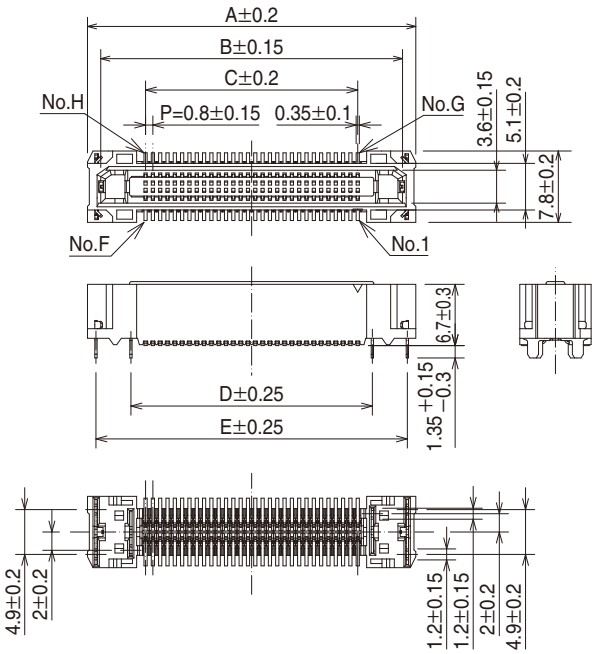

Unit : mm

Part No.	HRS No.	A	B	C	D	E	F	G	H (No. of contacts)
FX18-40S-0.8SV10	579-0055-1	27.9	25	15.2	18.4	26.05	20	21	40
FX18-60S-0.8SV10	579-0056-4	35.9	33	23.2	26.4	34.05	30	31	60
FX18-80S-0.8SV10	579-0057-7	43.9	41	31.2	34.4	42.05	40	41	80
FX18-100S-0.8SV10	579-0058-0	51.9	49	39.2	42.4	50.05	50	51	100
FX18-120S-0.8SV10	579-0059-2	59.9	57	47.2	50.4	58.05	60	61	120
FX18-140S-0.8SV10	579-0060-1	67.9	65	55.2	58.4	66.05	70	71	140

● Straight receptacle (15mm stack height)

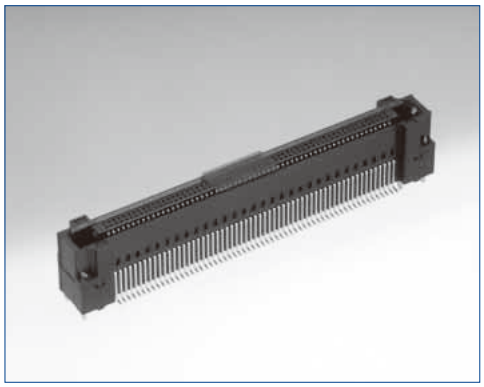

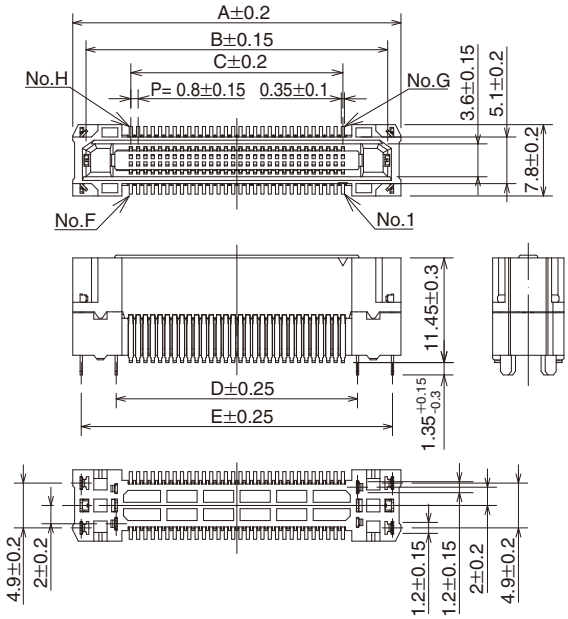

Unit : mm

Part No.	HRS No.	A	B	C	D	E	F	G	H (No. of contacts)
FX18-40S-0.8SV15	579-0026-3	27.9	25	15.2	18.4	26.05	20	21	40
FX18-60S-0.8SV15	579-0027-6	35.9	33	23.2	26.4	34.05	30	31	60
FX18-80S-0.8SV15	579-0028-9	43.9	41	31.2	34.4	42.05	40	41	80
FX18-100S-0.8SV15	579-0036-7	51.9	49	39.2	42.4	50.05	50	51	100
FX18-120S-0.8SV15	579-0029-1	59.9	57	47.2	50.4	58.05	60	61	120
FX18-140S-0.8SV15	579-0037-0	67.9	65	55.2	58.4	66.05	70	71	140

Jul.1.2026 Copyright 2026 HIROSE ELECTRIC CO., LTD. All Rights Reserved.

Downloaded from Arrow.com.

●Straight receptacle (20mm stack height)

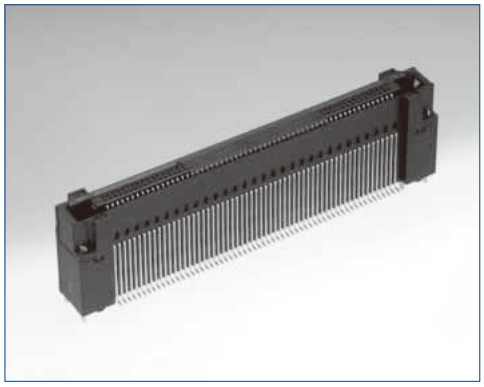

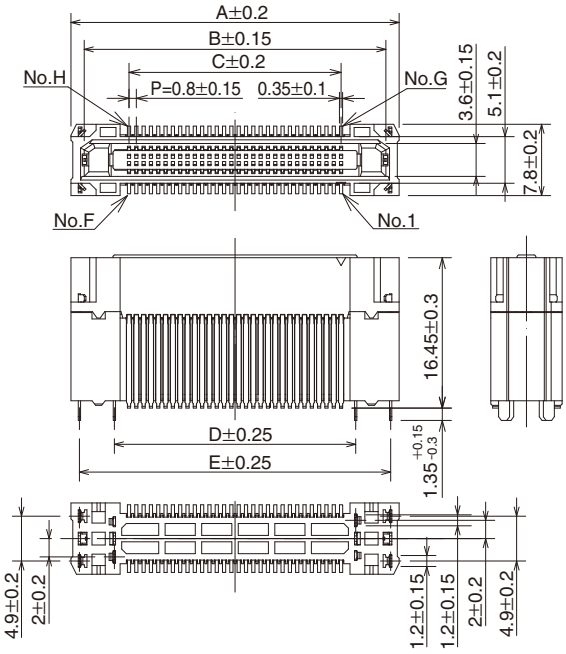

Unit : mm

Part No.	HRS No.	A	B	C	D	E	F	G	H (No. of contacts)
FX18-40S-0.8SV20	579-0030-0	27.9	25	15.2	18.4	26.05	20	21	40
FX18-60S-0.8SV20	579-0031-3	35.9	33	23.2	26.4	34.05	30	31	60
FX18-80S-0.8SV20	579-0032-6	43.9	41	31.2	34.4	42.05	40	41	80
FX18-100S-0.8SV20	579-0038-2	51.9	49	39.2	42.4	50.05	50	51	100
FX18-120S-0.8SV20	579-0033-9	59.9	57	47.2	50.4	58.05	60	61	120
FX18-140S-0.8SV20	579-0039-5	67.9	65	55.2	58.4	66.05	70	71	140

●Interposer (15mm height)

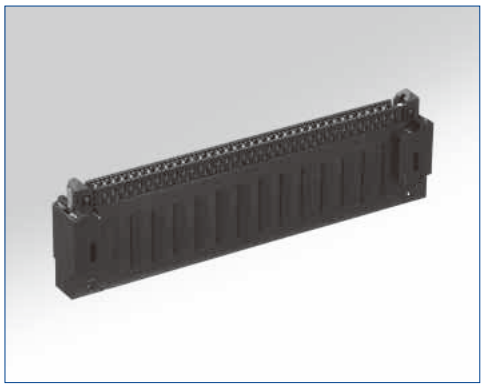

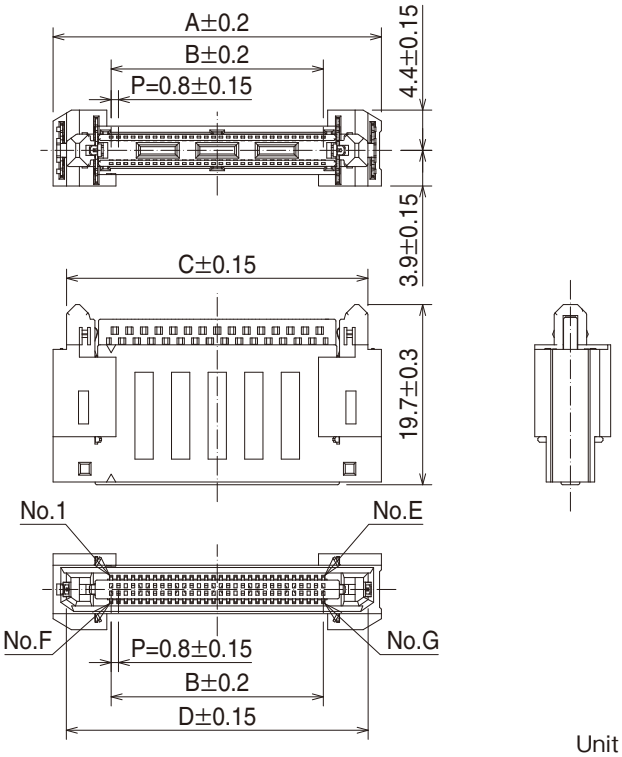

Unit : mm

Part No.	HRS No.	A	B	C	D	E	F	G (No. of contacts)
FX18-40PS-0.8H15	579-0049-9	27.9	15.2	24.95	25	20	21	40
FX18-60PS-0.8H15	579-0050-8	35.9	23.2	32.95	33	30	31	60
FX18-80PS-0.8H15	579-0051-0	43.9	31.2	40.95	41	40	41	80
FX18-100PS-0.8H15	579-0052-3	51.9	39.2	48.95	49	50	51	100
FX18-120PS-0.8H15	579-0053-6	59.9	47.2	56.95	57	60	61	120
FX18-140PS-0.8H15	579-0054-9	67.9	55.2	64.95	65	70	71	140

Jul.1.2026 Copyright 2026 HIROSE ELECTRIC CO., LTD. All Rights Reserved.

Downloaded from Arrow.com.

Recommended Land Pattern Dimensions

(PCB thickness : t = 1.6mm/Metal mask thickness : t = 0.12mm)

●Right angle receptacle/right angle header

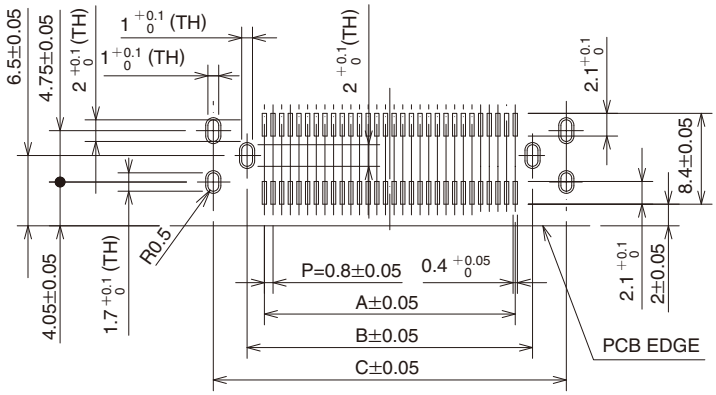

Part No.	A	B	C
FX18-40S-0.8SH	15.2	18.4	24.65
FX18-40P-0.8SH			
FX18-60S-0.8SH	23.2	26.4	32.65
FX18-60P-0.8SH			
FX18-80S-0.8SH	31.2	34.4	40.65
FX18-80P-0.8SH			
FX18-100S-0.8SH	39.2	42.4	48.65
FX18-100P-0.8SH			
FX18-120S-0.8SH	47.2	50.4	56.65
FX18-120P-0.8SH			
FX18-140S-0.8SH	55.2	58.4	64.65
FX18-140P-0.8SH			

●Straight header

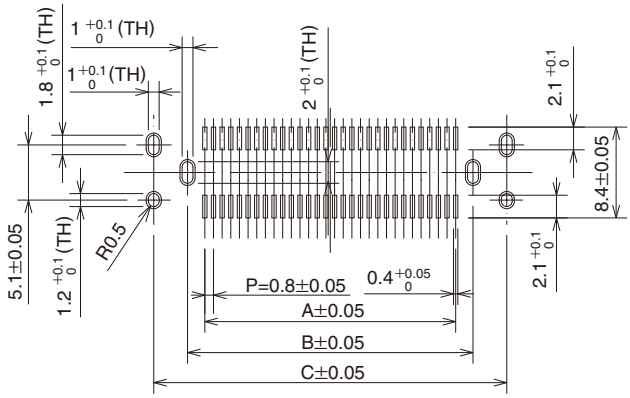

Part No.	A	B	C
FX18-40P-0.8SV	15.2	18.4	24.65
FX18-60P-0.8SV	23.2	26.4	32.65
FX18-80P-0.8SV	31.2	34.4	40.65
FX18-100P-0.8SV	39.2	42.4	48.65
FX18-120P-0.8SV	47.2	50.4	56.65
FX18-140P-0.8SV	55.2	58.4	64.65

●Straight header (SV 10mm height)

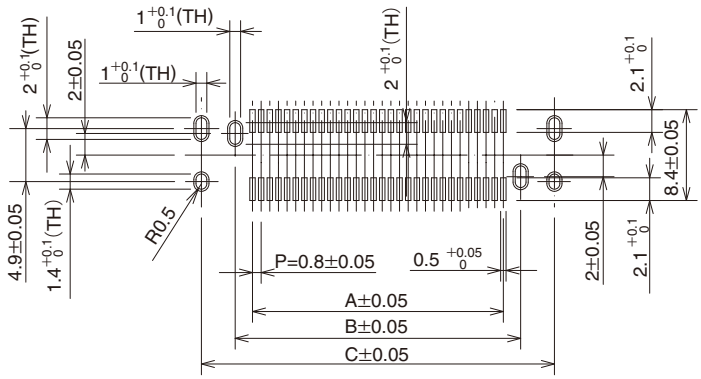

Part No.	A	B	C
FX18-40P-0.8SV10	15.2	18.4	24.65
FX18-60P-0.8SV10	23.2	26.4	32.65
FX18-80P-0.8SV10	31.2	34.4	40.65
FX18-100P-0.8SV10	39.2	42.4	48.65
FX18-120P-0.8SV10	47.2	50.4	56.65
FX18-140P-0.8SV10	55.2	58.4	64.65

●Straight receptacle (SV10/SV15/SV20mm heights)

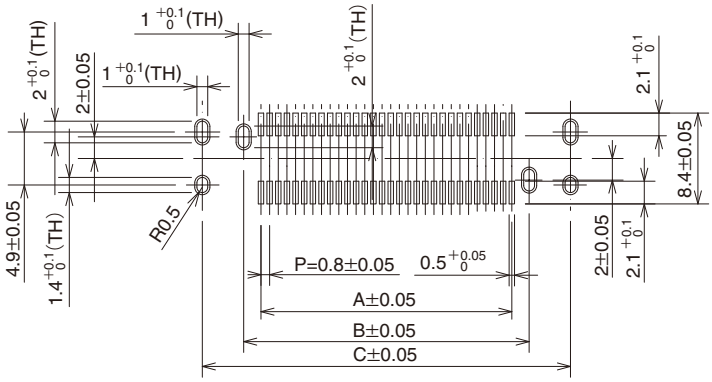

Part No.	A	B	C
FX18-40S-0.8SV10/15/20	15.2	18.4	26.05
FX18-60S-0.8SV10/15/20	23.2	26.4	34.05
FX18-80S-0.8SV10/15/20	31.2	34.4	42.05
FX18-100S-0.8SV10/15/20	39.2	42.4	50.05
FX18-120S-0.8SV10/15/20	47.2	50.4	58.05
FX18-140S-0.8SV10/15/20	55.2	58.4	66.05

Jul.1.2026 Copyright 2026 HIROSE ELECTRIC CO., LTD. All Rights Reserved.

Downloaded from Arrow.com.

◆ Packaging tray (dimensions and quantities)

●Right angle receptacle/right angle header

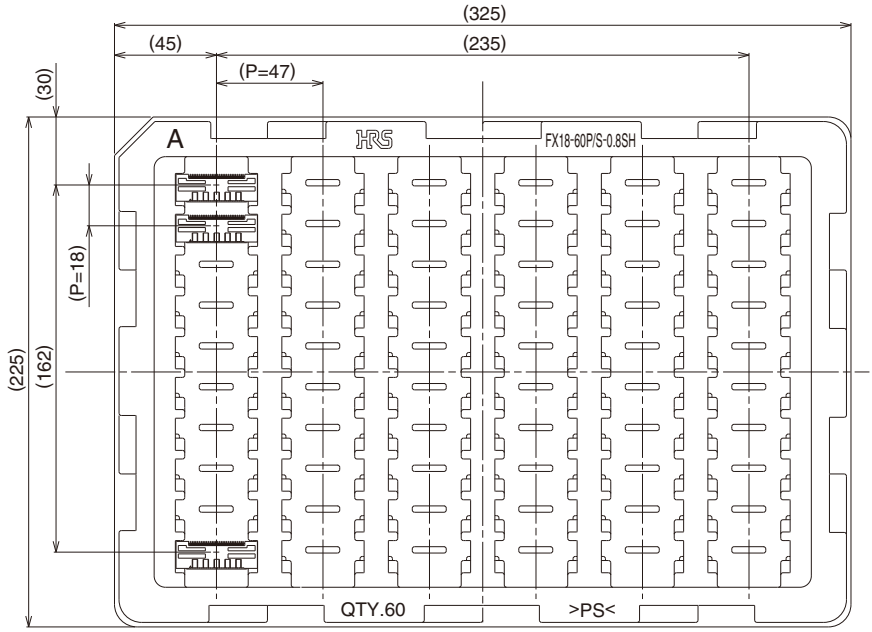

Part No.	Quantity
FX18-40S-0.8SH	70
FX18-40P-0.8SH	
FX18-60S-0.8SH	60
FX18-60P-0.8SH	
FX18-80S-0.8SH	50
FX18-80P-0.8SH	
FX18-100S-0.8SH	40
FX18-100P-0.8SH	
FX18-120S-0.8SH	40
FX18-120P-0.8SH	
FX18-140S-0.8SH	40
FX18-140P-0.8SH	

●Straight header/Straight receptacle for 10mm stack height

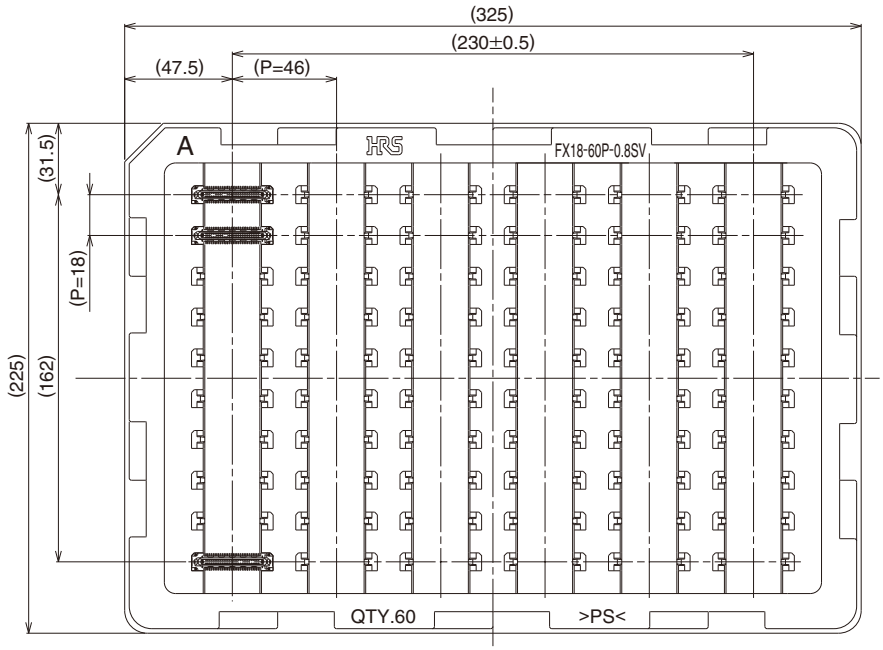

Part No.	Quantity
FX18-40P-0.8SV FX18-40S-0.8SV10	70
FX18-60P-0.8SV FX18-60S-0.8SV10	60
FX18-80P-0.8SV FX18-80S-0.8SV10	50
FX18-100P-0.8SV FX18-100S-0.8SV10	40
FX18-120P-0.8SV FX18-120S-0.8SV10	40
FX18-140P-0.8SV FX18-140S-0.8SV10	40

Jul.1.2026 Copyright 2026 HIROSE ELECTRIC CO., LTD. All Rights Reserved.

Downloaded from Arrow.com.

●Straight header 10mm/Straight receptacle 15mm/Straight receptacle 20mm

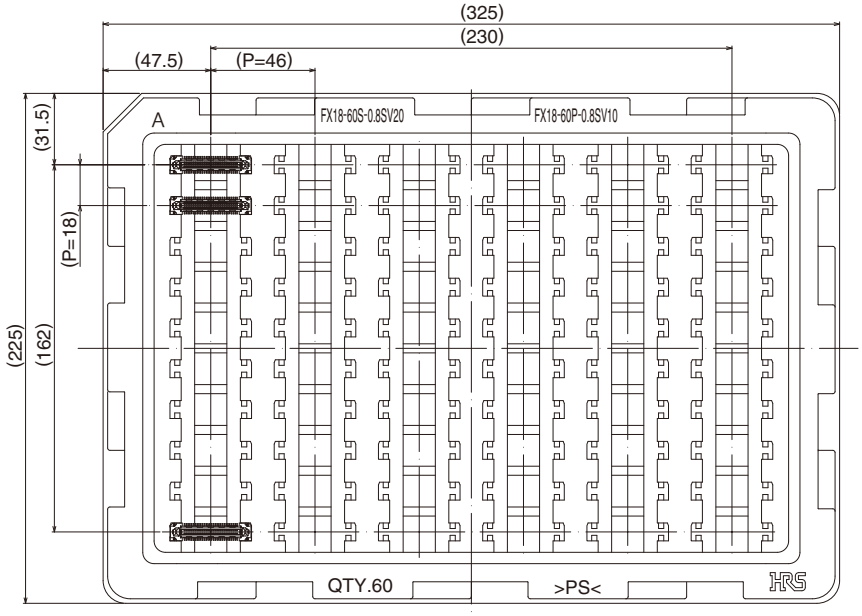

Part No.	Quantity
FX18-40P-0.8SV10	60
FX18-40S-0.8SV15	
FX18-40S-0.8SV20	
FX18-60P-0.8SV10	60
FX18-60S-0.8SV15	
FX18-60S-0.8SV20	
FX18-80P-0.8SV10	50
FX18-80S-0.8SV15	
FX18-80S-0.8SV20	
FX18-100P-0.8SV10	40
FX18-100S-0.8SV15	
FX18-100S-0.8SV20	
FX18-120P-0.8SV10	40
FX18-120S-0.8SV15	
FX18-120S-0.8SV20	
FX18-140P-0.8SV10	30
FX18-140S-0.8SV15	
FX18-140S-0.8SV20	

●Interposer 15mm height

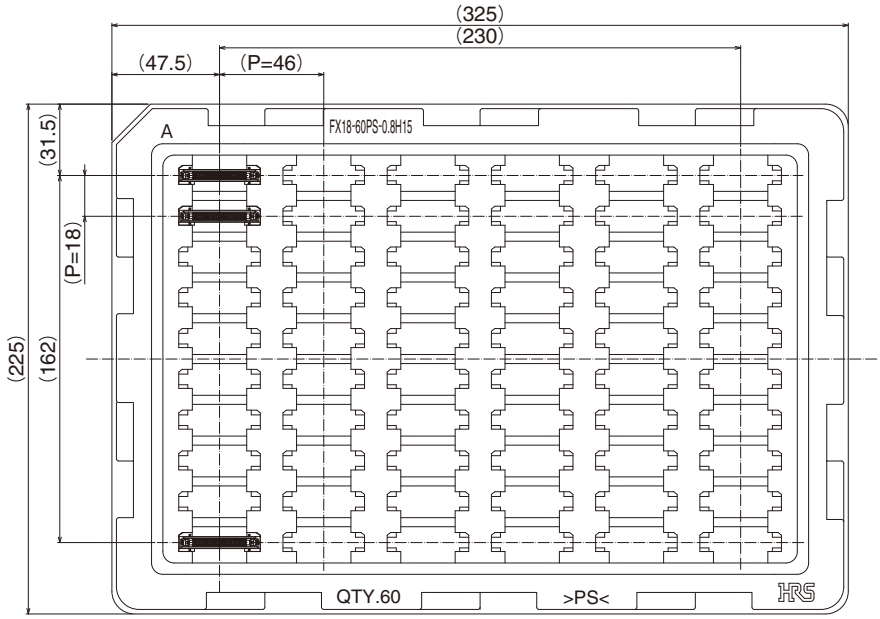

Part No.	Quantity
FX18-40PS-0.8H15	60
FX18-60PS-0.8H15	60
FX18-80PS-0.8H15	50
FX18-100PS-0.8H15	40
FX18-120PS-0.8H15	40
FX18-140PS-0.8H15	30

Jul.1.2026 Copyright 2026 HIROSE ELECTRIC CO., LTD. All Rights Reserved.

Downloaded from Arrow.com.

Temperature Profile

This temperature profile was tested under the following conditions, and any attempt to recreate will vary depending on the external conditions.

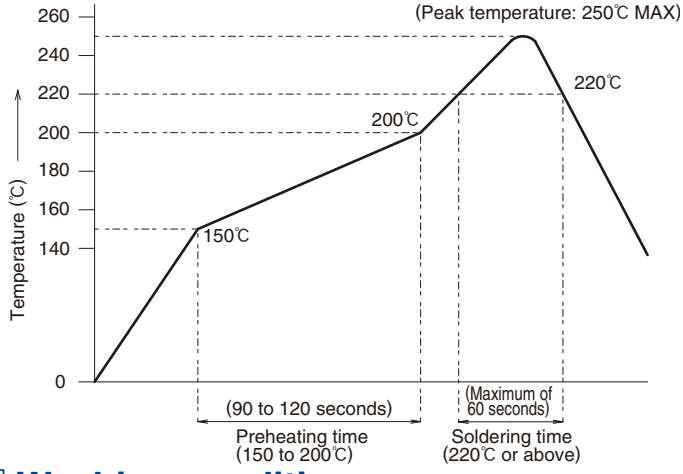

(Applicable Conditions)

Test PCB Size Dimensions : 110 × 50 × 1.6 (mm)
Material : Glass epoxy
Solder composition : Sn- 3 Ag- 0.5 Cu
Flux contained quantity : 11 wt%
Metal mask thickness : 0.12mm

(Note 1)This temperature profile contains recommended values and is for reference only.
(Note 2)Reflow process should not exceed 2 times.
(Note 3)Cream solder type: Will differ due to the amount used and manufacturer

Washing conditions

●Washing with organic solvent

Solvent	Washing in normal temperature	Washing in heated condition
IPA (Isopropyl alcohol)	○	○

●Water based cleaning

When using water based cleaning agents (including terpene, and alkali saponifiers), pay special attention to how the cleaning agent will react to specific metals and plastics before selecting one of them. Various cleaning agent manufacturers publish reaction tables for their cleaning agents. Do not leave connectors with moisture remaining on them.

●Cautions when washing

The electrical performance may deteriorate if the flux or cleaning detergent is left on the connector after the cleaning. Check thoroughly to ensure that there is no residue left on any of the surfaces.

Operating Precautions

●Mating gap permitted

The effective mating length of the MF contact A is 2.5 mm, signal contact is 2 mm and MF contact B is 1.5 mm. The approved amount of gap between the header and receptacle should not exceed 1 mm.

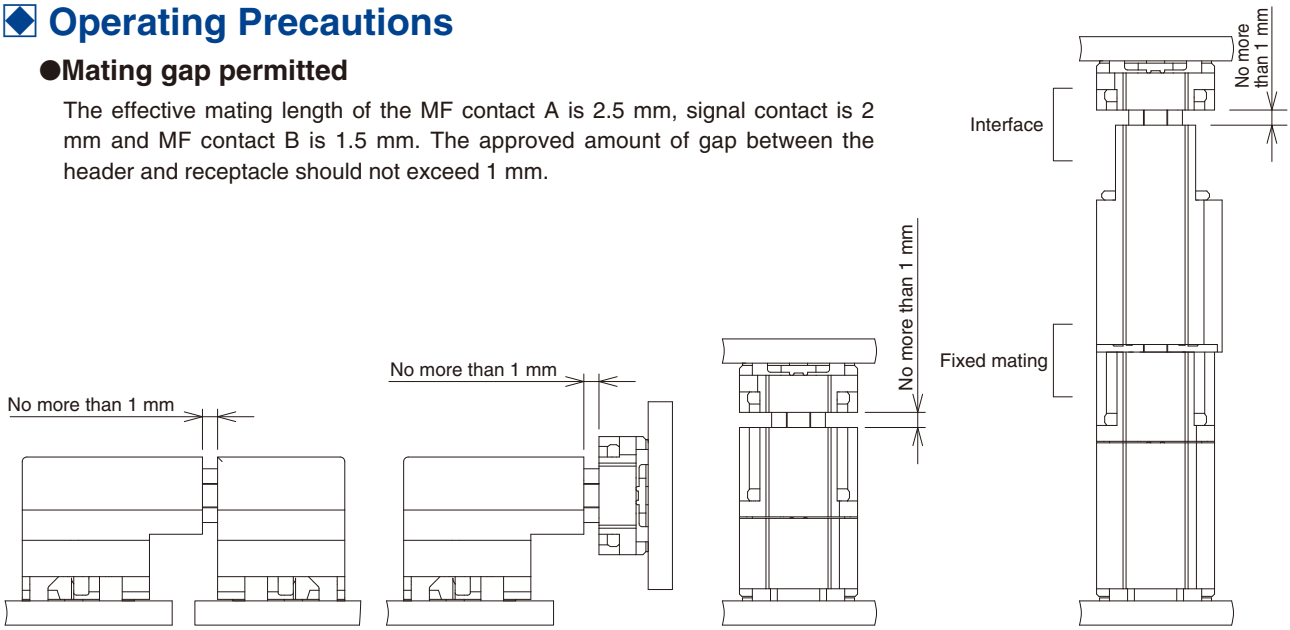

Coplanar connection type | **Right angle connection type** | **Parallel connection type (2 piece)** | **Parallel connection type (3 piece)**

- Provide another form of support to the PCB, this connector was not designed to be the main form of support.
- Do not mate the connectors at an angle, refer to the rotation mating/unmating guideline (TADC 4-210630). (For the guideline, please contact the sales representative of our company.)
- When using the 15mm height interposer, be cautious of the items listed below.
  1) The lock on the fixed mating side of the interposer is not designed to be the mate/unmate point. This section should not be mated/unmated more than 5 times.
  2 When mating these connectors, make sure to mate the fixed mating side first then mate the interface mating/umating side to the header.
  3) The effective mating length of the MF contact A is 2.5mm, signal contact is 2mm and MF contact B is 1.5mm.
  4) The approved amount of gap between the header and receptacle should not exceed 1 mm.

Jul.1.2026 Copyright 2026 HIROSE ELECTRIC CO., LTD. All Rights Reserved.

Downloaded from Arrow.com.

MEMO :

Jul.1.2026 Copyright 2026 HIROSE ELECTRIC CO., LTD. All Rights Reserved.

Downloaded from Arrow.com.

MEMO：

Jul.1.2026 Copyright 2026 HIROSE ELECTRIC CO., LTD. All Rights Reserved.

HIROSE ELECTRIC CO.,LTD.
2-6-3,Nakagawa Chuoh,Tsuzuki-Ku,Yokohama-Shi 224-8540,JAPAN
https://www.hirose.com/

The characteristics and the specifications contained herein are for reference purpose. Please refer to the latest customer drawings prior to use.
The contents of this catalog are current as of date of 01/2023. Contents are subject to change without notice for the purpose of improvements.
Downloaded from Arrow.com.