THCV219 / THCV220 Evaluation Kit

V-by-One®HS Single Link Evaluation Board

Parts Number: THEVA219-V2, THEVA220-V2

1. General Description

THEVA219-V2 and THEVA220-V2 boards are designed to support video data transmission between the host and display. One high-speed lane can carry up to 32bits data and 3bits of synchronizing signals at a pixel clock frequency from 7.5MHz to 75MHz.

Table 1 Available Frequency

Width	Link	TTL Clock Freq.
24bit	Si/So	10MHz to 100MHz
32bit	Si/So	7.5MHz to 75MHz

2. Features

- Color Depth Selectable : 24bits / 32bits
- Single Link
- AC Coupling for High-speed Lines
- Single Power Supply
- V-by-One®HS Standard Version 1.4 Compliant

3. Overview

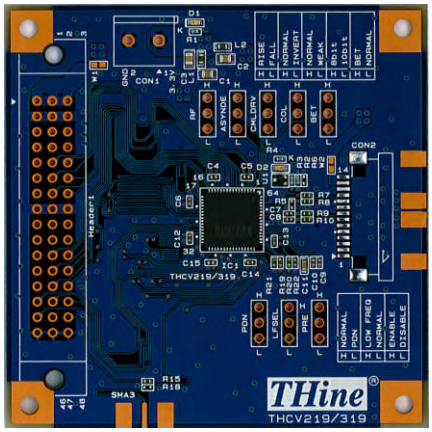

(a) THEVA219-V2

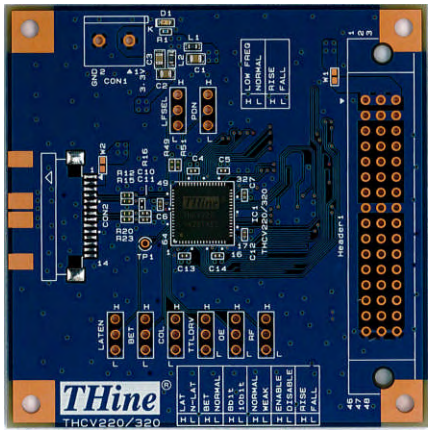

(b) THEVA220-V2

Figure 1 THEVA219-V2 and THEVA220-V2 Top Side View

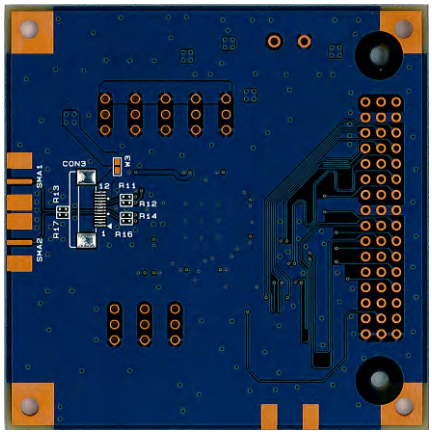

(a) THEVA219-V2

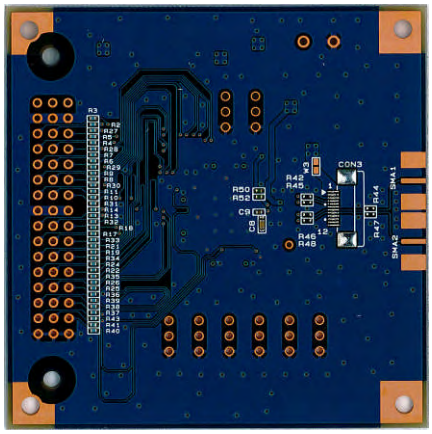

(b) THEVA220-V2

Figure 2 THEVA219-V2 and THEVA220-V2 Bottom Side View

Copyright(C) 2015 THine Electronics, Inc.

Downloaded from Arrow.com.

4. Power Supply Setup

This chapter shows power supply condition.

Caution: Please check if there is no power-GND short on below red trace before supplying any power.

3.3V Power Supply to Each Board

Each evaluation board requires 3.3V power supply. Please use "CON1" connector typically.

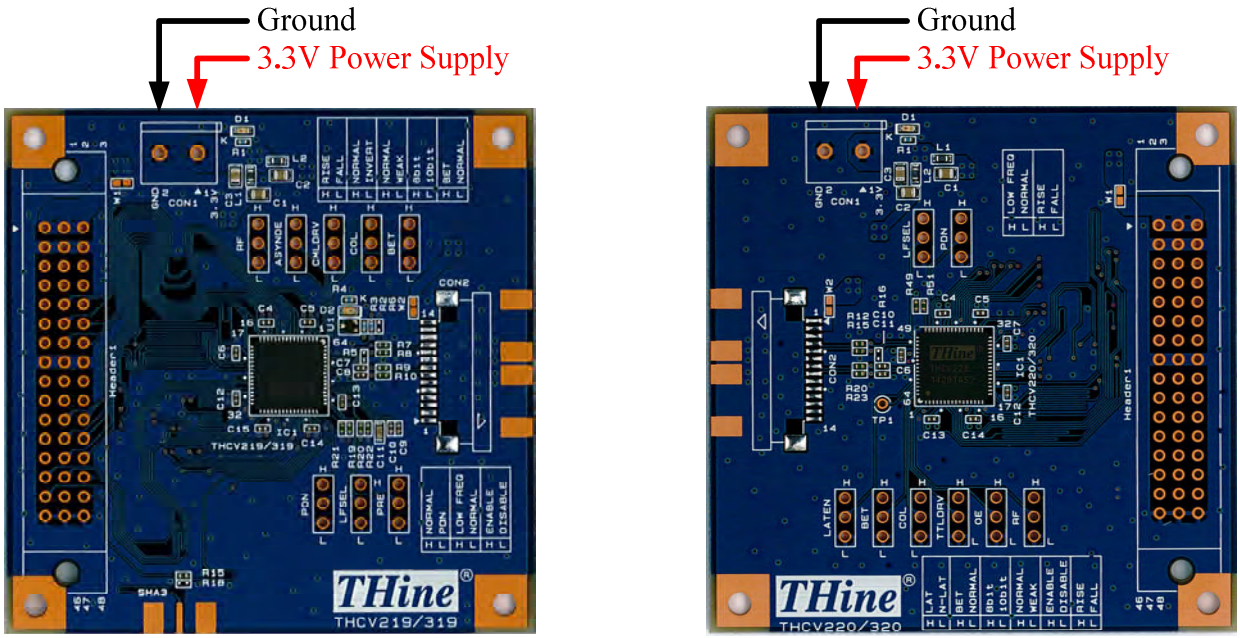

(a)THEVA219-V2 (b)THEVA220-V2

Figure 3 Power Supply for Evaluation Board

Power Supply from / to Connector

3.3V power supply can be connected to Header1 and CON2 by using W1, W2 and W3solder jumper.

THEVA219-V2

W1: Connect the 3.3V power supply with pin#1, 2 and 3 of Header1.
W2: Connect the 3.3V power supply with pin#13 and 14 of CON2.
W3: Connect the 3.3V power supply with pin#11 and 12 of CON3.

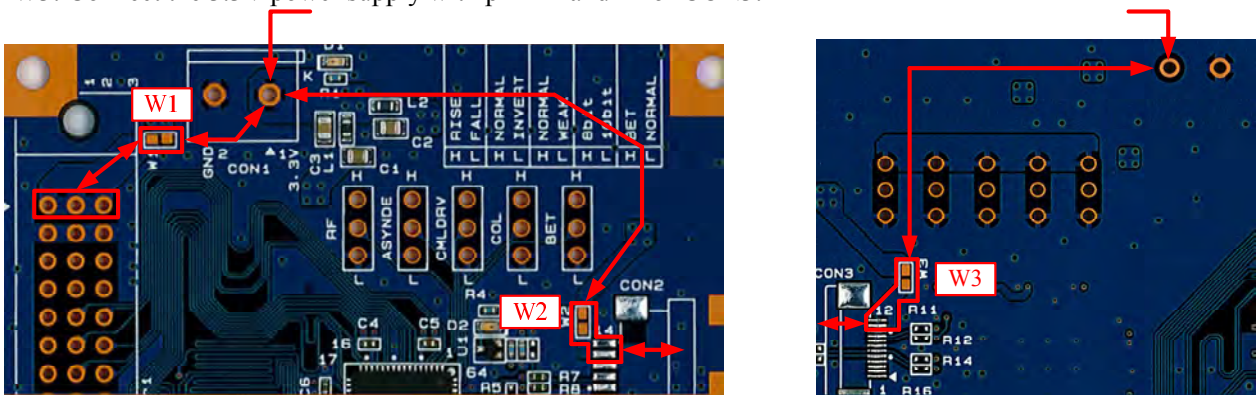

(a)THEVA219-V2 (Top Side) (b) THEVA219-V2 (Bottom Side)

Figure 4 THEVA219-V2 Power Supply from / to Each Connector

Copyright(C) 2015 THine Electronics, Inc.

Downloaded from Arrow.com.

THEVA220-V2

W1: Connect the 3.3V power supply with pin#1, 2 and 3 of Header1.
W2: Connect the 3.3V power supply with pin#1 and 2 of CON2.
W3: Connect the 3.3V power supply with pin#1 and 2 of CON3.

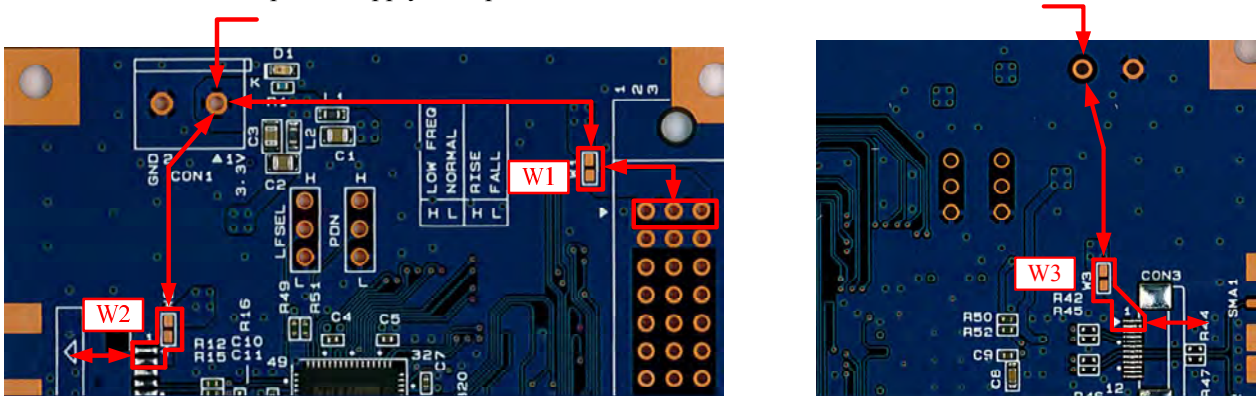

(a)THEVA220-V2 (Top Side) (b) THEVA220-V2 (Bottom Side)

Figure 5 THEVA220-V2 Power Supply from / to Each Connector

5. V-by-One®HS Input / Output Connector Select

V-by-One®HS input / output connector can be selected by using 0ohm resistors.

(1) 1mm Pitch Connector (Default Setting)

Please mount / unmount following 0ohm resistors to use 1mm pitch connector.

Table 2 Resistor Setting for 1mm Pitch Connector

	Mount	Unmount
THEVA219-V2	R7, R8, R9, R10	R11, R12, R14, R16
THEVA220-V2	R12, R15, R20, R23	R42, R45, R46, R48

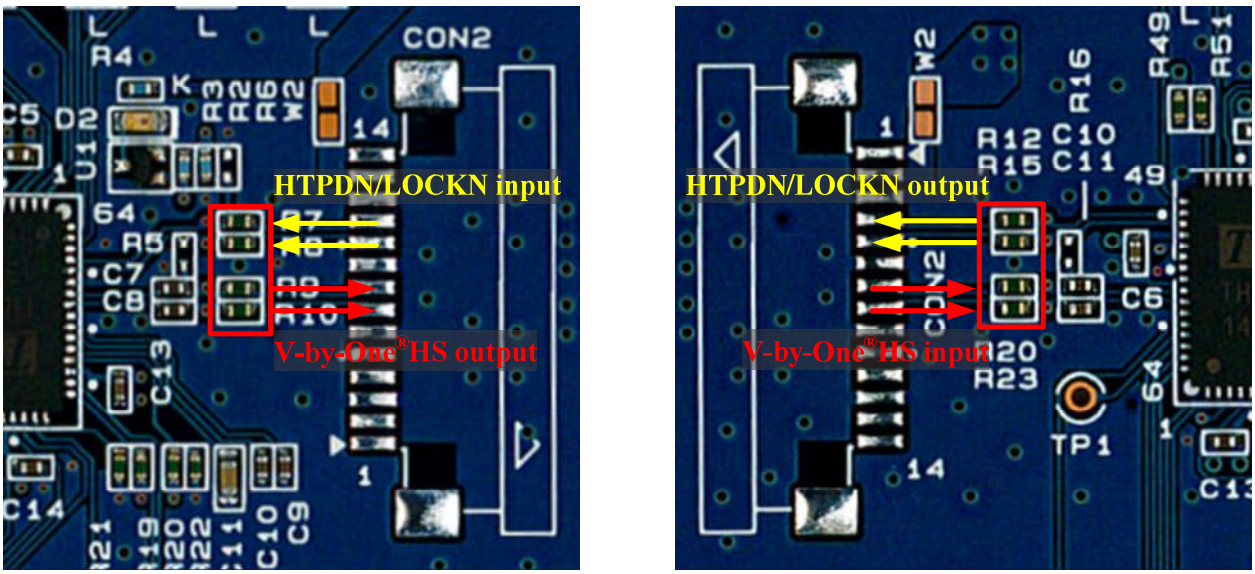

(a)THEVA219-V2 (Top Side) (b)THEVA220-V2 (Top Side)

Figure 6 Resistor Mounting for 1mm Pitch Connector

Copyright(C) 2015 THine Electronics, Inc.

Downloaded from Arrow.com.

(2) 0.5mm Pitch Connector

Please mount / unmount following 0ohm resistors to use 0.5mm pitch connector.

Table 3 Resistor Setting for 0.5mm Pitch Connector

	Mount	Unmount
THEVA219-V2	R11, R12, R14, R16	R7, R8, R9, R10, R13, R17
THEVA220-V2	R42, R45, R46, R48	R12, R15, R20, R23, R44, R47

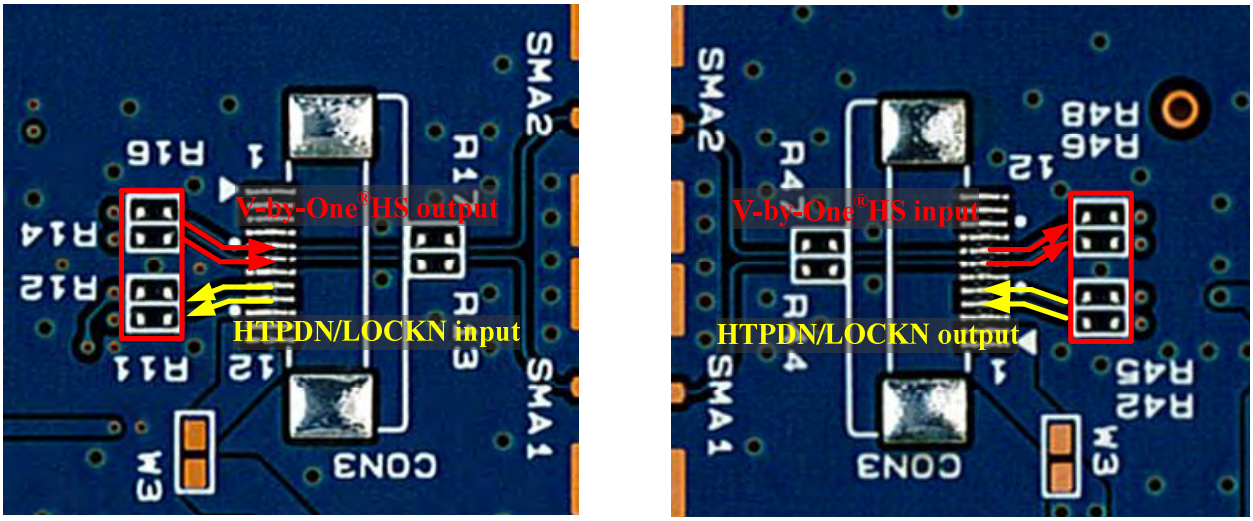

(a)THEVA219-V2 (Bottom Side) (b)THEVA220-V2 (Bottom Side)

Figure 7 Resistor Mounting for 0.5mm Pitch Connector

(3) SMA Connector

Please mount / unmount following 0ohm resistors to use SMA connector.

*HTPDN and LOCKN signals don't have the connection from / to SMA connector.

Table 4 Resistor Setting for SMA Connector

	Mount	Unmount
THEVA219-V2	R13, R14, R16, R17	R7, R8, R9, R10
THEVA220-V2	R44, R46, R47, R48	R12, R15, R20, R23

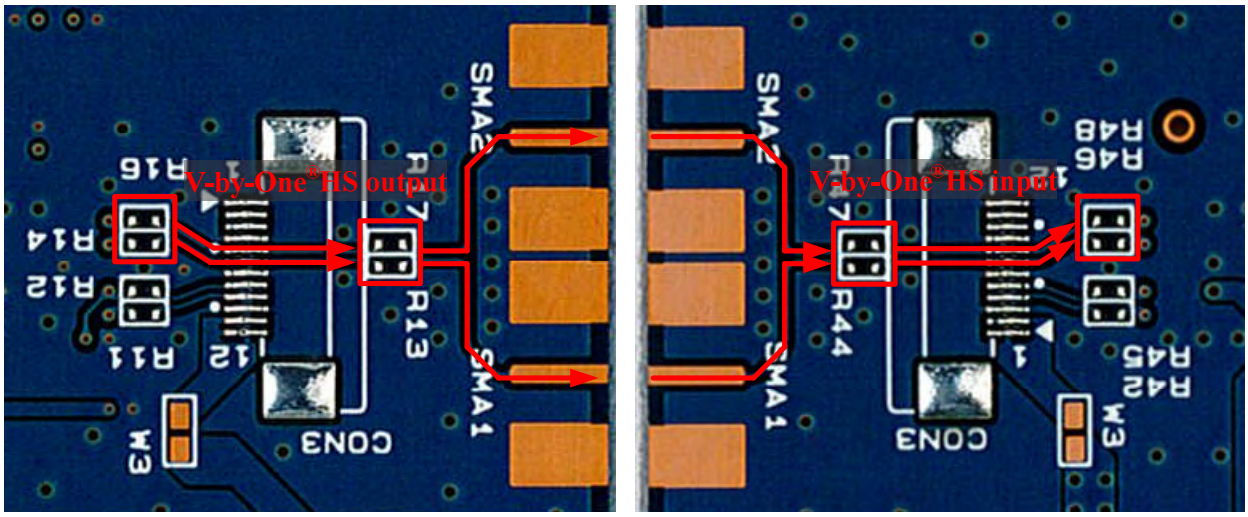

(a)THEVA219-V2 (Bottom Side) (b)THEVA220-V2 (Bottom Side)

Figure 8 Resistor Mounting for SMA Connector

Copyright(C) 2015 THine Electronics, Inc.

Downloaded from Arrow.com.

6. Function Setting

Setting pin of each boards is shown in yellow area of Figure 9. Pin#2 of each 3HEADER is connected to IC's setting pin.
Each setting pin's high or low setting can set by connecting pin#2 of 3HEADER and high level or low level.

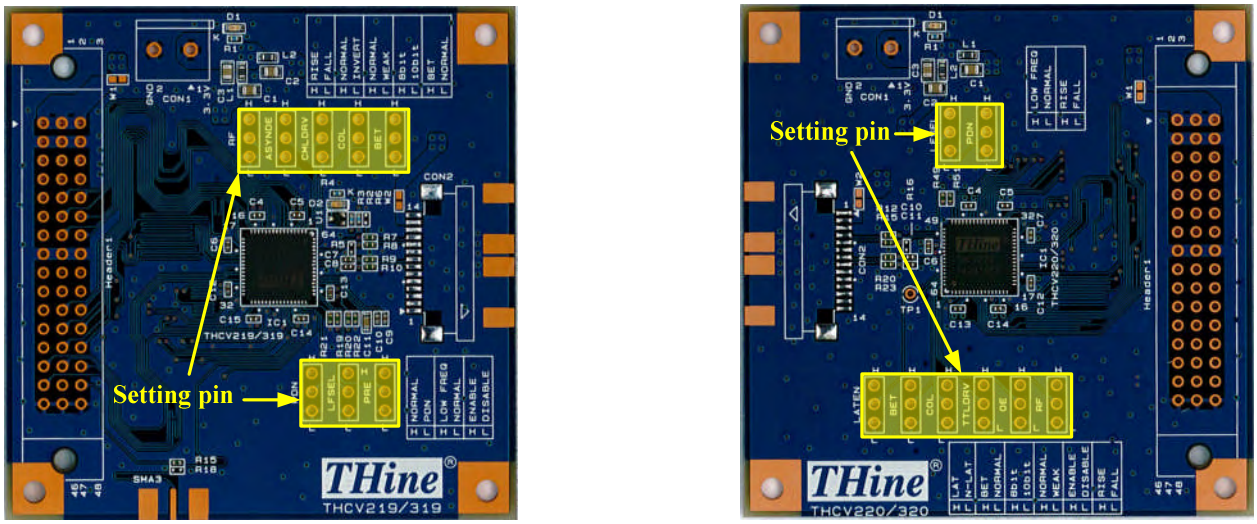

Figure 9 Position of Function Setting Pin

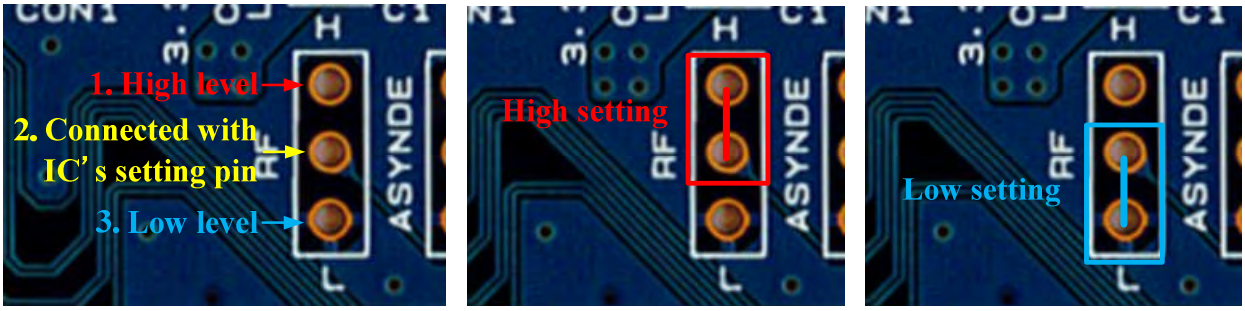

(a)3HEADER Description (b)High Level Setting (c)Low Level Setting

Figure 10 High / Low Setting Description

7. Clock Input from SMA Connector

THEVA219-V2 can also choose the TTL clock input from SMA connector by using 0ohm resistor.
If you want to use SMA connector for clock input, please change the 0ohm resistor mount from R15 to R18.

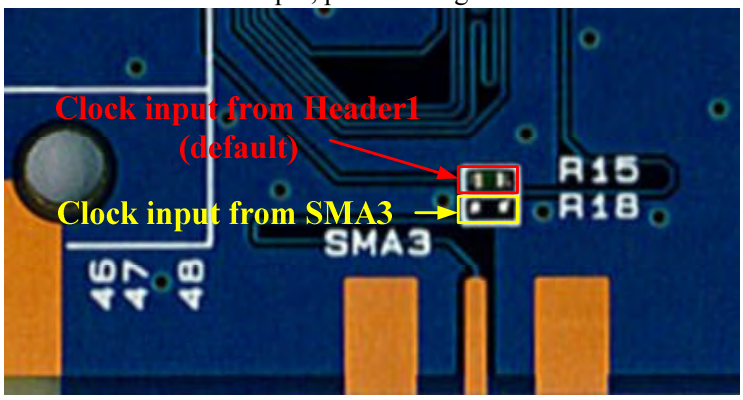

Figure 11 TTL Clock Input Connector Select

Copyright(C) 2015 THine Electronics, Inc.

Downloaded from Arrow.com.

8. Status Indicate LED

The following table shows indicating status of each LED.

Table 5 LED Description

	THEVA219-V2	THEVA220-V2
D1	3.3V Power Supply Indicator	
D2	LOCKN Status Indicator	

9. LOCKN Sharing and HTPDN Omission

LOCK Sharing

LOCKN connection can be shared with V-by-One®HS trace. When you share the LOCKN signal, Please mount 1k ohm resistors to share the LOCKN signal, and unmount 0ohm resistors shown in Figure 12.

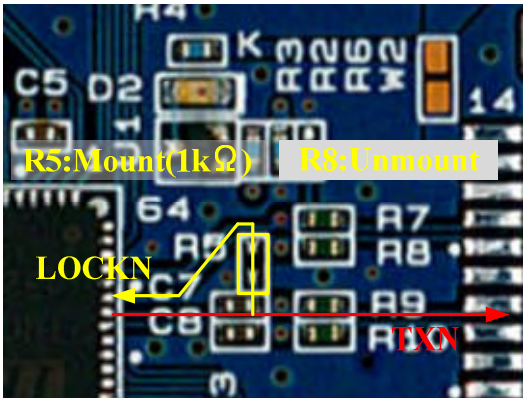

(a)THEVA219-V2 (Top View)

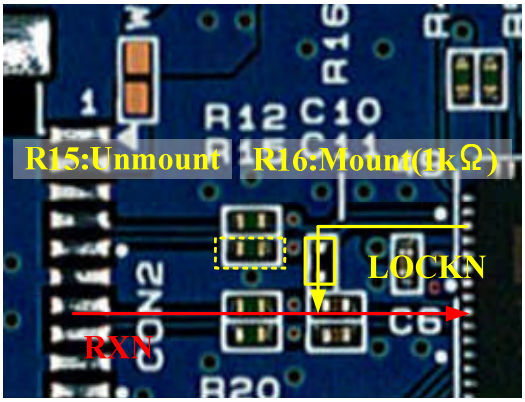

(b)THEVA220-V2 (Top View)

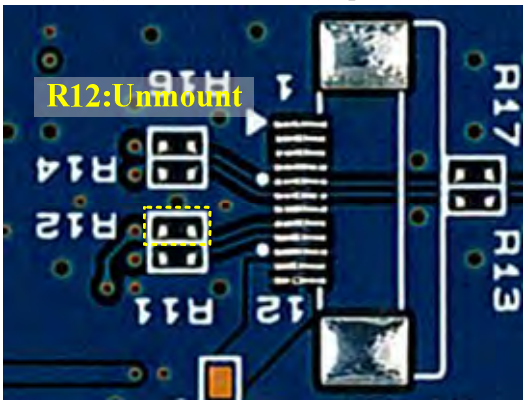

(c) THEVA219-V2 (Bottom Side)

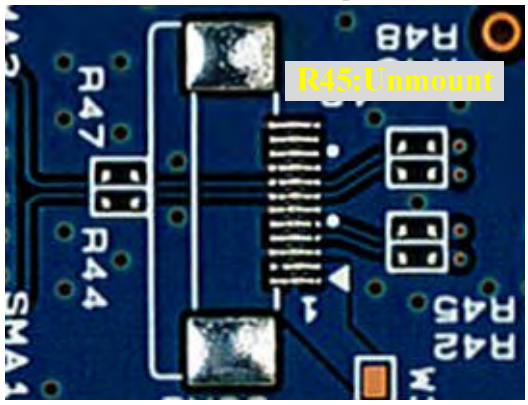

(d) THEVA220-V2 (Bottom Side)

Figure 12 LOCKN Sharing

Copyright(C) 2015 THine Electronics, Inc.

Downloaded from Arrow.com.

HTPDN Signal Omission

HTPDN signal can be omitted by using 1k ohm resistor. When you omit the HTPDN signal, Please mount 1k ohm resistors to pull down the HTPDN signal at transmitter side, and unmount the 0ohm resistors shown in Figure 13. When the HTPDN omission using, HTPDN output from receiver side is open connection.

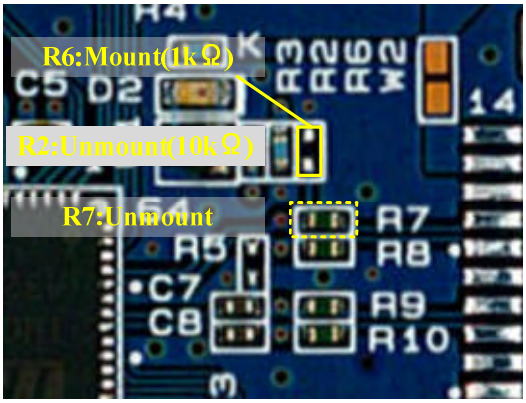

(a)THEVA219-V2 (Top Side)

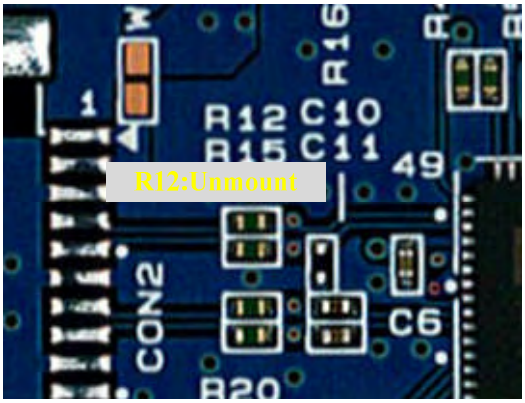

(b)THEVA220-V2 (Top Side)

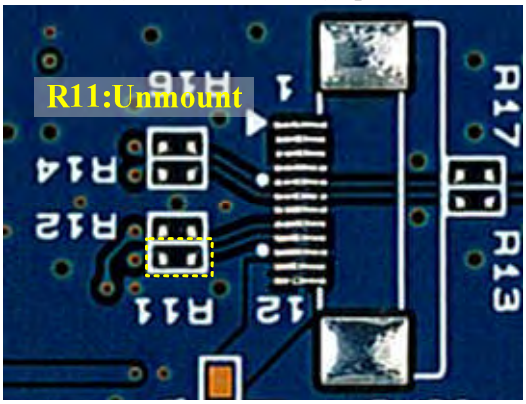

(c)THEVA219-V2 (Bottom Side)

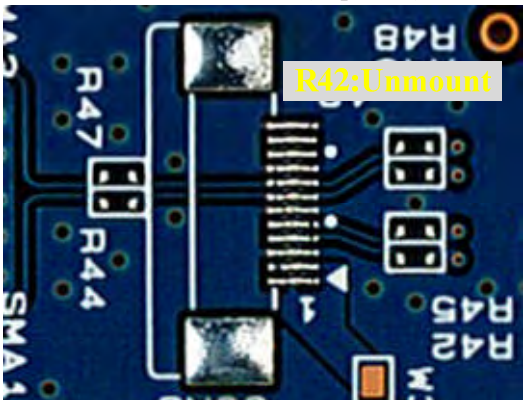

(d)THEVA220-V2 (Bottom Side)

Figure 13 HTPDN Omission

Copyright(C) 2015 THine Electronics, Inc.

Downloaded from Arrow.com.

10. Function

This chapter shows function setting of THEVA219-V2 and THEVA220-V2.

Table 6 THEVA219-V2 Function Setting Description

Silk	Symbol	Function
LFSEL	LFSEL	Frequency range setting. H: Low Frequency Operation L: Normal Operation
COL	COL	Data width setting. H : 24bit L : 32bit
PDN	PDN	Power down input. H: Normal Operation L: Power Down Mode
PRE	PRE	Pre-Emphasis level select input. H : Pre-Emphasis Enable L : Pre-Emphasis Disable
CMLDRV	CMLDRV	CML outputs drive strength select input. H : Normal Drive Strength L : Weak Drive Strength
RF	RF	Input clock triggering edge select input for latching input data H: Rising Edge L: Falling Edge
BET	BET	Field-BET entry. H : Field BET Operation L : Normal Operation
ASYNDE	ASYNDE	Asynchronous DE input. H: Normal Operation (ASYNDE Function Disable) L: DE Input Invert Operation (ASYNDE Function Enable)

Table 7 THEVA220-V2 Function Setting Description

Silk	Symbol	Function
LFSEL	LFSEL	Frequency range setting. H: Low Frequency Operation L: Normal Operation
COL	COL	Data width setting. H : 24bit L : 32bit
PDN	PDN	Power down input. H: Normal Operation L: Power Down Mode
TTLDRV	TTLDRV	TTL outputs drive strength select input. H : Normal Drive Strength L : Weak Drive Strength
OE	OE	Output Enable input. H: All CMOS Outputs Enabled L: All CMOS Outputs Disabled, except for LOCKN, HTPDN
RF	RF	Output clock triggering edge select input H: Rising Edge L: Falling Edge
LATEN	LATEN	Latch select input under Field-BET operation H : Latched Result L : NOT Latched Result
BET	BET	Field-BET entry. H : Field BET Operation L : Normal Operation

Copyright(C) 2015 THine Electronics, Inc.

Downloaded from Arrow.com.

11. Schematic

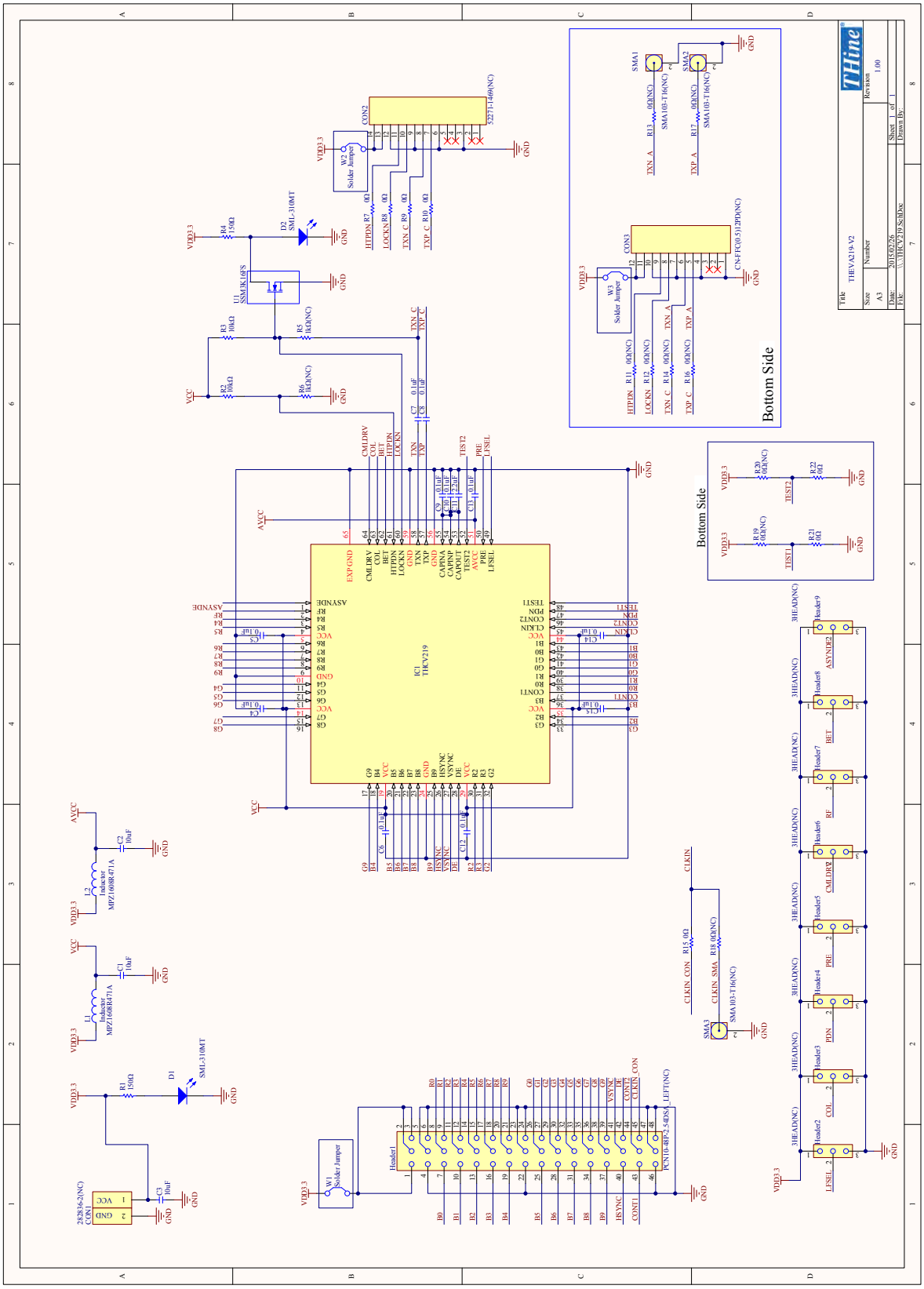

Figure 14 THEVA219-V2 Schematic

Downloaded from Arrow.com.

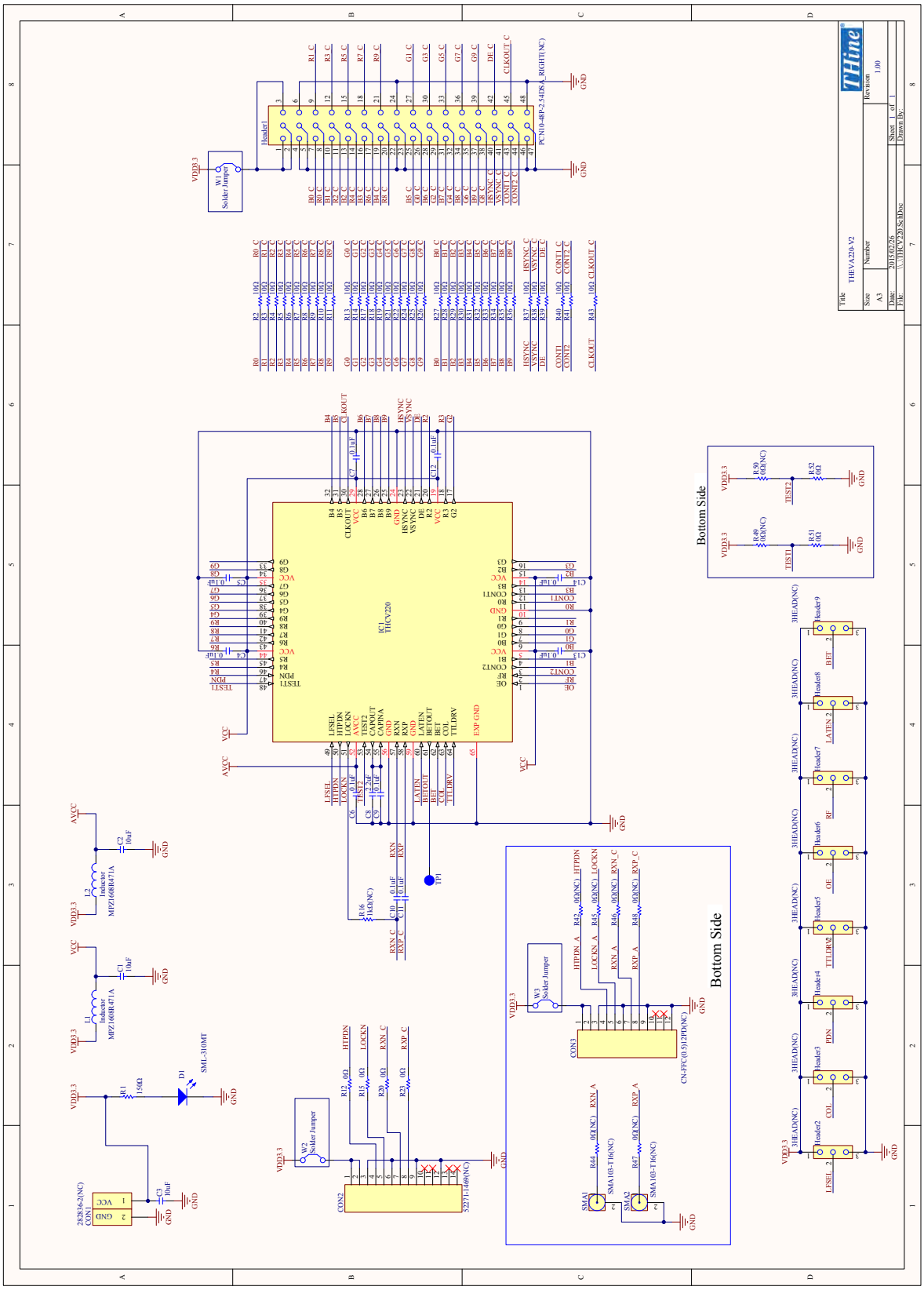

Figure 15 THEVA220-V2 Schematic

Downloaded from Arrow.com.

12. Bills of Materials

Table 8 THEVA219-V2 BOM

TYPE	Value / Part No.	Package	SPEC	Reference No.	Q'ty	Note
Capacitor	10uF	2012	16V	C1, C2, C3	3	
Capacitor	0.1uF	1005	16V	C4, C5, C6, C7, C8, C9, C10, C12, C13, C14, C15	11	
Capacitor	2.2uF	1608	16V	C11	1	
Connector	282836-2(NC)	5mm_pitch	2pin	CON1	1	
Connector	525271-1469(NC)	1mm_pitch	14pin	CON2	1	
Connector	CN-FFC(0.5)12PD(NC)	0.5mm_pitch	12pin	CON3	1	
Connector	PCN10-48P-2.54DSA_LEFT(NC)	2.54mm_pitch	48pin	Header1	1	
Connector	SMA103-T16(NC)	1.6mm	PCB End Jack	SMA1, SMA2, SMA3	3	
Header	3HEAD(NC)	2.54mm_pitch	---	Header2, Header3, Header4, Header5, Header6, Header7, Header8, Header9	8	
IC	THCV219	QFN64	---	IC1	1	
IC	SSM3K16FS	SSM	RON15Ω	U1	1	
Inductor	MPZ1608R471A	1608	1.2A	L1, L2	2	
LED0	SML-310MT	1608	GREEN	D1, D2	2	
Resistor	150Ω	1005	0.1W	R1, R4	2	
Resistor	10kΩ	1005	0.1W	R2, R3	2	
Resistor	1kΩ(NC)	1005	0.1W	R5, R6	2	
Resistor	0Ω	1005	1A	R7, R8, R9, R10, R15, R19, R20, R21, R22	9	
Resistor	0Ω(NC)	1005	1A	R11, R12, R13, R14, R16, R17, R18	7	

Table 9 THEVA220-V2 BOM

TYPE	Value / Part No.	Package	SPEC	Reference No.	Q'ty	Note
Capacitor	10uF	2012	16V	C1, C2, C3	3	
Capacitor	0.1uF	1005	16V	C4, C5, C6, C7, C9, C10, C11, C12, C13, C14	10	
Capacitor	2.2uF	1608	16V	C8	1	
Connector	282836-2(NC)	5mm_pitch	2pin	CON1	1	
Connector	52271-1469(NC)	1mm_pitch	14pin	CON2	1	
Connector	CN-FFC(0.5)12PD(NC)	0.5mm_pitch	12pin	CON3	1	
Connector	PCN10-48P-2.54DSA_RIGHT(NC)	2.54mm_pitch	48pin	Header1	1	
Connector	SMA103-T16(NC)	1.6mm	PCB End Jack	SMA1, SMA2	2	
Header	3HEAD(NC)	2.54mm_pitch	---	Header2, Header3, Header4, Header5, Header6, Header7, Header8, Header9	8	
IC	THCV220	QFN64	THCV220	IC1	1	
Inductor	MPZ1608R471A	1608	1.2A	L1, L2	2	
LED0	SML-310MT	1608	GREEN	D1	1	
Resistor	150Ω	1005	0.1W	R1	1	
Resistor	10Ω	1005	0.1W	R2, R3, R4, R5, R6, R7, R8, R9, R10, R11, R13, R14, R17, R18, R19, R21, R22, R24, R25, R26, R27, R28, R29, R30, R31, R32, R33, R34, R35, R36, R37, R38, R39, R40, R41, R43	36	
Resistor	0Ω	1005	1A	R12, R15, R20, R23, R49, R50, R51, R52	8	
Resistor	1kΩ(NC)	1005	0.1W	R16	1	
Resistor	0Ω(NC)	1005	1A	R42, R44, R45, R46, R47, R48	6	

Copyright(C) 2015 THine Electronics, Inc.

Downloaded from Arrow.com.

13. Set Items

Table 10 Set Items

TYPE	Part No.
DC Connector	282836-2
FFC Connector for V-by-One®HS Link	52271-1469
FFC 14pin 1mm Pitch for V-by-One®HS Link	98267-0299
Pin Header	---

It's possible to mount these parts on this board and use.

Copyright(C) 2015 THine Electronics, Inc.

Downloaded from Arrow.com.

14. Notices and Requests

Please kindly read, understand and accept this "Notices and Requests" before using this product.

For the Material:

1. The product specifications described in this material are subject to change without prior notice.
2. The circuit diagrams described in this material are examples of the application which may not always apply to design of respective customers. THine Electronics, Inc. ("THine") is not responsible for possible errors and omissions in this material. Please note if the errors or omissions should be found in this material, THine may not be able to correct them immediately.
3. This material contains THine's copyright, know-how or other proprietary. Copying or disclosing of the contents of this material to any third party without THine's prior permission is strictly prohibited.

For the Product:

1. This product is solely designed for evaluation purpose, and other purposes including mass production and distribution are not intended.
2. This product has been solely manufactured for electric design engineers but not for end-users.
3. This product is not radiation-tolerant product.
4. This product is presumed to be used for general electric device, not for applications which require extremely high-reliability/safety (including medical device concerned with critical care, aerospace device, or nuclear power control device). Also, when using this product for any device concerned with control and/or safety of transportation mean, traffic signal device, or other various types of safety device, such use must be after applying appropriate measures to the product.
5. This product has been designed with the utmost care to accomplish the purpose of evaluation of IC products manufactured by THine Electronics, Inc., however, THine MAKES NO WARRANTIES OR REPRESENTATIONS WITH REGARD TO ANY PERFORMANCE OR FUNCTION OF THIS PRODUCT IN ANY CIRCUMSTANCE.
6. This product has been manufactured with the utmost care in quality control and product reliability, however, there may be faults or defects with a low but fixed probability, as inevitable phenomenon concerned with semiconductor manufacturing processes. Therefore, Customers are encouraged to have sufficiently redundant or error-preventive design applied to the use of the product so as not to have THine's product cause any social or public damage. Replacement of the product is only available in case of obvious defects of mount devices at the point of unpacking the product. Neither replacement nor failure analysis of the product is available in any other case of defects with the product and/or the product's components.
7. Customers are asked, if required, to judge by themselves on whether this product falls under the category of strategic goods under the Foreign Exchange and Foreign Trade Control Law.
8. Please Note that if infringement of any third party's industrial ownership should occur by using this product, THine will be exempted from any responsibility unless it directly relates to the production process or functions of the product.
9. Developing, designing and manufacturing of Customers' own products, equipments or system by using of this product is strictly prohibited in any way.

THine Electronics, Inc.
sales@thine.co.jp

Copyright(C) 2015 THine Electronics, Inc.

Downloaded from Arrow.com.