Rev	AWO #	Description	Date	Appr
-		RELEASED	9/12/18	
A		UPDATE TITLE	5/11/26	LW1/RC

APPROVED: _____

DATE: _____ TITLE: _____

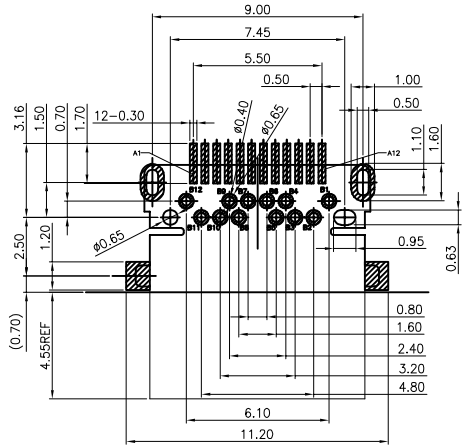

RECOMMENDED PCB LAYOUT

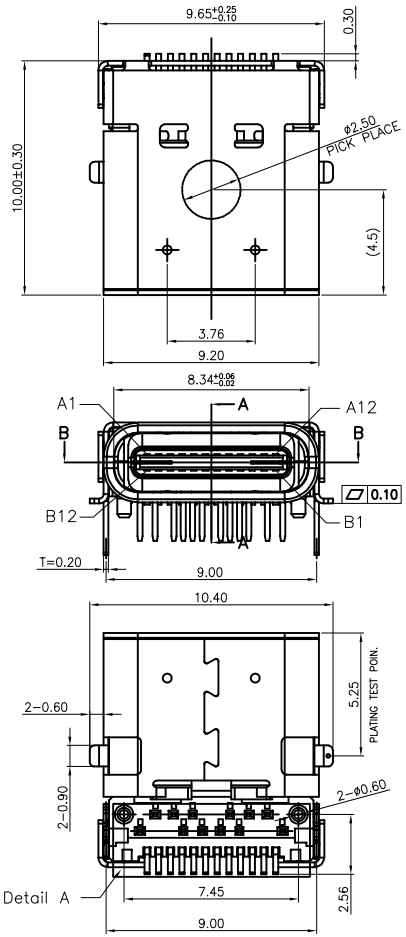

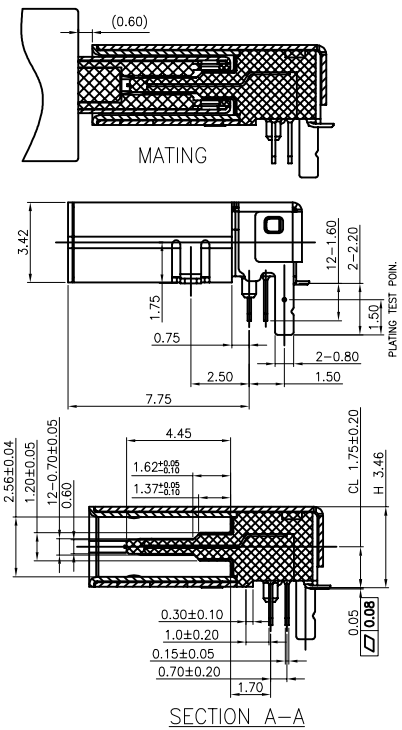

SECTION A−A

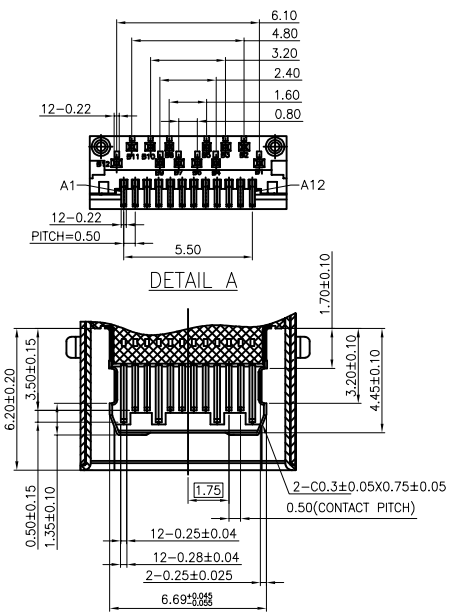

Pin	Signal Name	Mating Sequence	Pin	Signal Name	Mating Sequence
A1	GND	First	B12	GND	First
A2	SSTXp1	Second	B11	SSRXp1	Second
A3	SSTXn1	Second	B10	SSRXn1	Second
A4	VBUS	First	B9	VBUS	First
A5	CC1	Second	B8	SBU2	Second
A6	Dp1	Second	B7	Dn2	Second
A7	Dn1	Second	B6	Dp2	Second
A8	SBU1	Second	B5	CC2	Second
A9	VBUS	First	B4	VBUS	First
A10	SSRXn2	Second	B3	SSTXn2	Second
A11	SSRXp2	Second	B2	SSTXp2	Second
A12	GND	First	B1	GND	First
SHELL		GND	SHELL		GND

SPECIFICATIONS:

Material:
Insulator: Hi−temp thermoplastic, rated UL 94V−0
Insulator color: Black
Contacts: Copper alloy
Shell: Stainless steel, Nickel plated
Cover shell: Copper alloy, Nickel plated
Inner ground cover shell: Stainless Steel, Clean
Min plate: Stainless Steel, Clean

Plating:
Gold flash over Nickel underplate on contact area,
Matte Tin over Nickel underplate on solder tails.

Electrical:
Current rating: 5 A (Power supply pin: A1, A4, A9, A12, B1, B4, B9, B12)
1.25 A (Vconn pin)
0.25 A (Other signal pin)
Contact resistance: 40 mohms max 10 mohms change after test,
measure @ 20mV, 100 mA
Insulation resistance: 100 Mohms min.
Dielectric withstanding: 100 VAC RMS

Mechanical:
Insertion force: 5~20N
Withdrawal force: 6~20N After test
Durability: 10,000 Cycles

Temperature Rating:
Operating temperature: −40˚C to +85˚C

Environmental:
Lead free, RoHS compliant. RoHS COMPLIANT

PACKAGED ON TAPE & REEL

UNLESS OTHERWISE SPECIFIED ALL DIMENSIONS ARE MILLIMETERS. TOLERANCES: EXCEPT AS NOTED

MM X. ± 0.50 .X ± 0.30 .XX ± 0.20 .XXX ± 0.10 ANGLE ± 2˚

DRAWN	HR	9/12/18
CHECKED	OC	9/12/18
APPROVED		

CONFIDENTIAL AND PROPRIETARY
© Adam Tech. All rights reserved. This document contains confidential and proprietary information belonging to Adam Tech. It is provided solely for design and reference purposes by authorized parties. Any reproduction, distribution, display, or disclosure to third parties, in whole or in part, without the prior written consent of Adam Tech, is strictly prohibited. Adam Tech retains all rights, including copyright, trademark, trade secret, and all other intellectual property rights worldwide.

ADAM TECH
909 Rahway Avenue,
Union, NJ 07083
Phone: 908-687-5000
adam-tech.com

TITLE UNIVERSAL SERIAL BUS, TYPE C, FEMALE, RIGHT ANGLE, BLACK INSULATOR TRANSMISSION EFFICIENCY: USB 3.2 Gen 2x2 (20Gb/s)

SIZE	PART NO.	REV.
X	USB-C31-S-RA-CS1D-BK-T/R	A

REF: S00197C SCALE: NTS SHEET 1 OF 1

Downloaded from Arrow.com.