AUTOMOTIVE SPEAKER

Product No. 121442

BLS64-12-08H27.1

Issue No. BS/TES01.2133

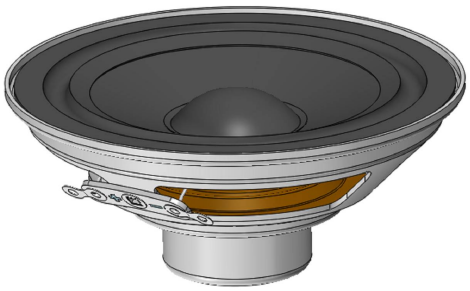

Features:

- Large power
- Loud sound output
- RoHS

Drawn by	Checked by	Approved by	Customer approved
Ronnie.Li	Litra.Yang	Peter.Zhang	

BESTAR Holdings Co., Ltd.

www.be-star.com | info@be-star.com

Downloaded from Arrow.com.

Content:

1 Characteristics 3
1.1 Technical terms 3
1.2 Test method 4
1.3 Frequency Response Curve 5
1.4 F0 Curve 6
1.5 Total Harmonic Distortion 7
1.6 R&B Curve 8
2 Part List 9
3 Dimension 10
4 Reliability Test 11-12
5 Packing 13
6 History change record 14
7 Important Notice 15

Downloaded from Arrow.com.

1.Characteristics

1.1Technical terms

1. Size	Ø64*27.1mm
2. Impedance at 1KHz	8±15%Ω
3. Lowest Resonance frequency	220±20%Hz
4. Rated input power	8W(8V)
5. Maximum input power	10W (8.95V)
6. Buzz & Rattle(at sine wave 8.95V)	must be normal
7. SPL(1W 1m sine wave)	78±3dB (at 0.8K,1K,1.2K,1.5KHz AVE)
8. THD(1W/1KHz)	MAX 5%
9. Operating temperature	-40...+85℃
10. Storage temperature	-40...+85℃
11.Weight	≈35g

Downloaded from Arrow.com.

1.2 Test method:

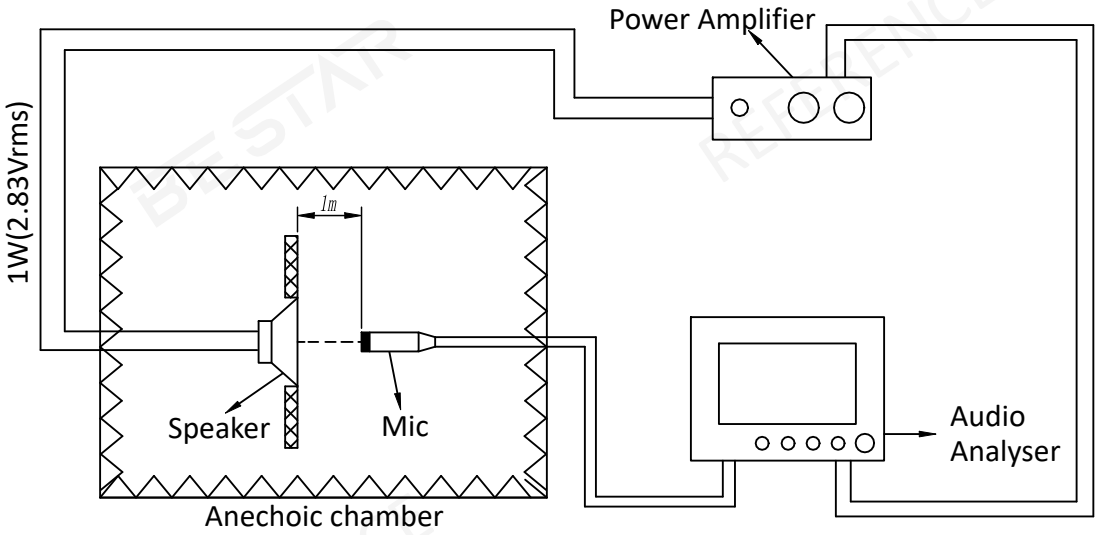

Downloaded from Arrow.com.

1.3 Frequency Response Curve (only for reference)

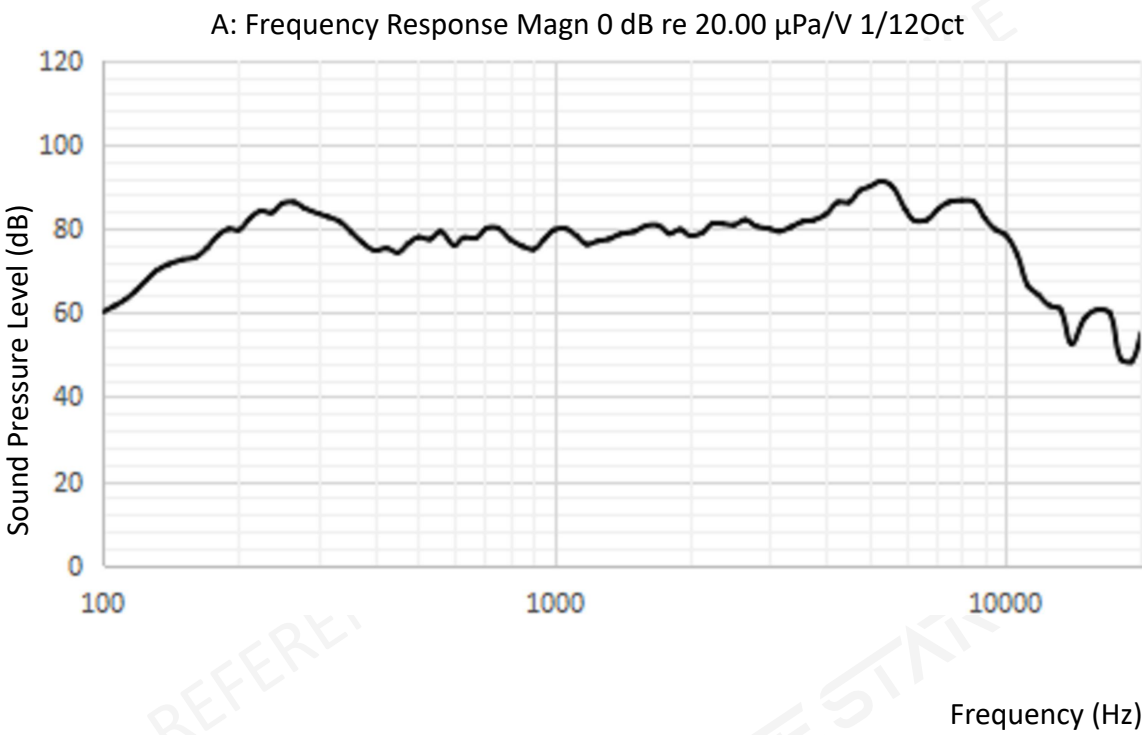

1.3.1 Sensitivity

SPL is expressed in dB rel 20 µPa,computed according to IEC 268-5.
Measurement set up according chapter 1.2 and parameters according chapter 1.3.

Downloaded from Arrow.com.

1.4 F0 Curve (only for reference)

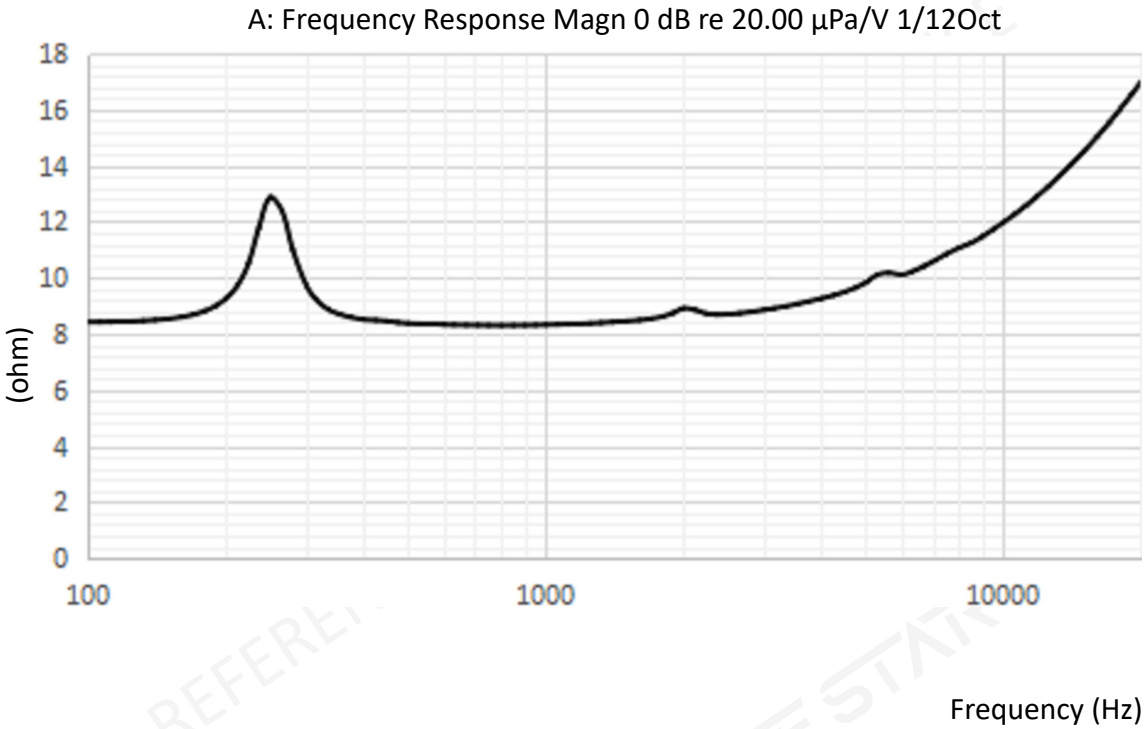

1.4.1 Resonance Frequency

Resonance frequency is measured according test set up in chapter 1.2 and parameters according chapter 1.4

Downloaded from Arrow.com.

1.5 Total Harmonic Distortion (only for reference)

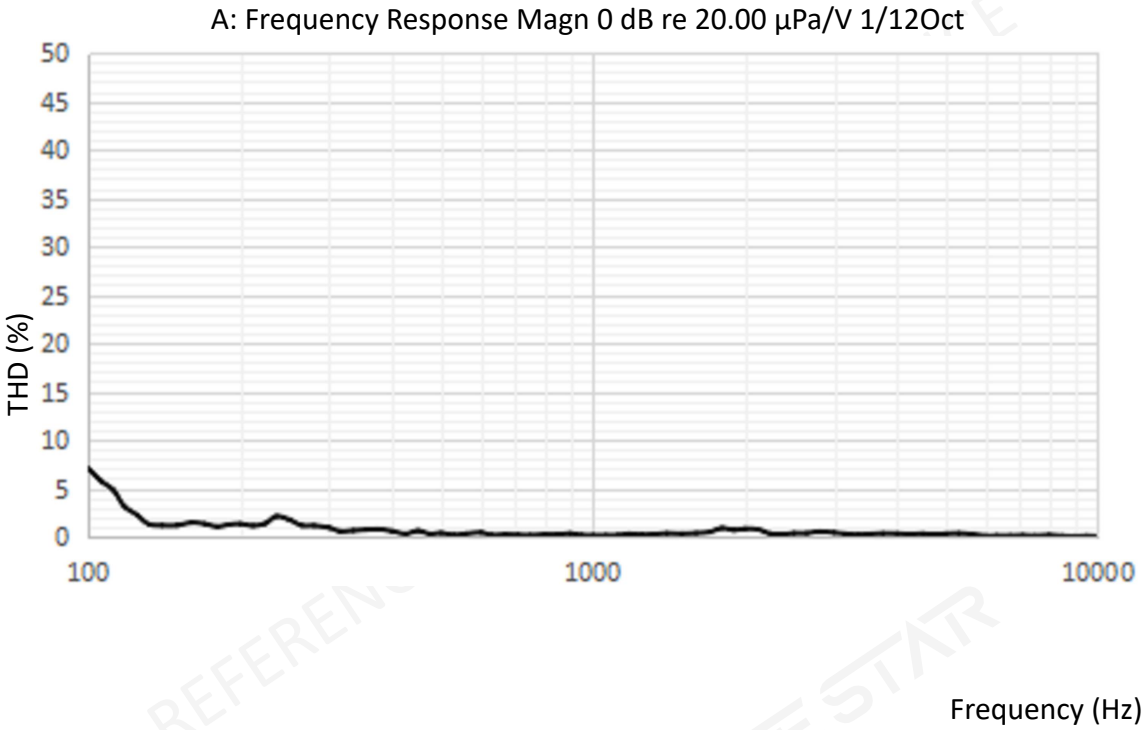

1.5.1 THD

THD is measured according test set up in chapter 1.2 and parameters according chapter 1.5

Downloaded from Arrow.com.

1.6 R&B Curve (only for reference)

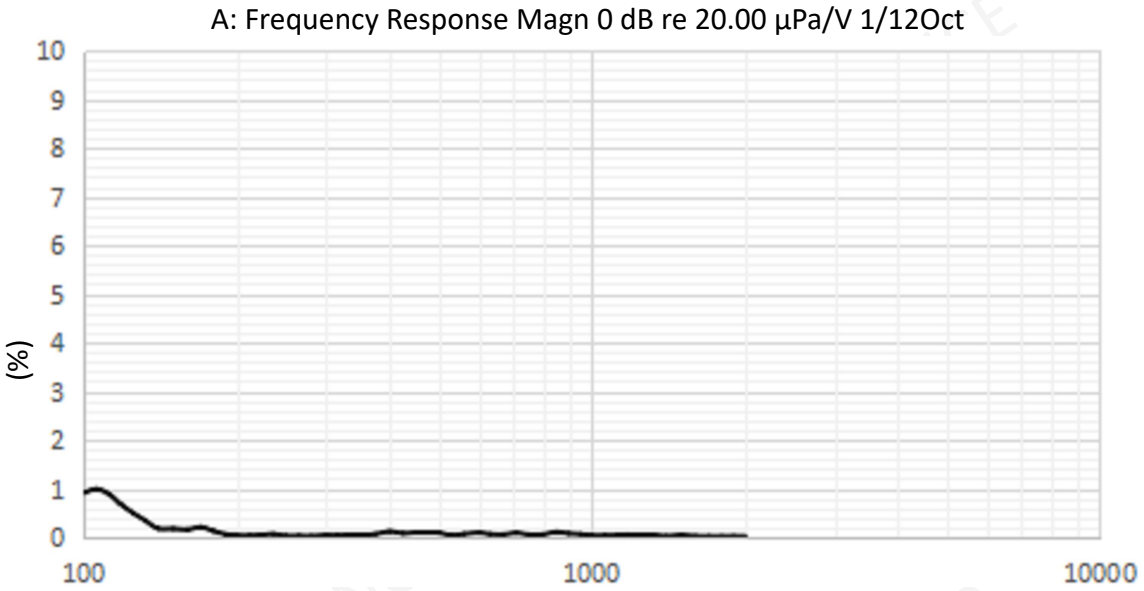

1.6.1 R&B

R&B is measured according test set up in chapter 1.2 and parameters according chapter 1.6

Downloaded from Arrow.com.

2.Part List

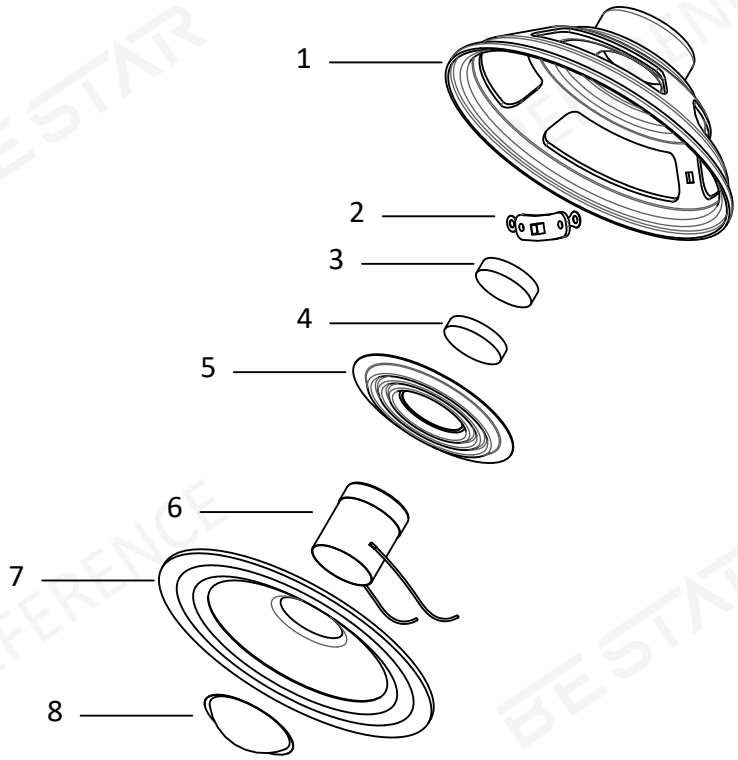

8. Dust cap	PEI
7. Waterproof	Paper+Rubber
6. Voice coil	KAPTON0.075t+PESVW0.09t
5. Damper	CONEX
4. Plate	SPCC
3. Magnet	NdFeB
2. Tag	Paper+SPCC
1. Frame	SPCC

Downloaded from Arrow.com.

3. Dimension

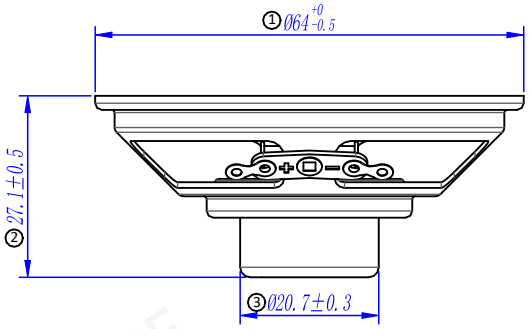

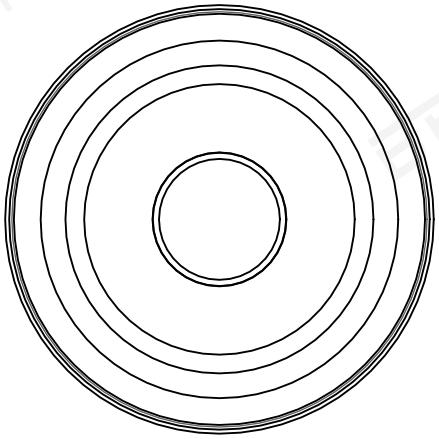

Tolerance:±0.3mm

Downloaded from Arrow.com.

4. Reliability test

4.1 Ordinary temp life

Room temperature sine wave F0-5KHz (8Vrms) input 96 hours frequency scanning speed 1.5s.At the end of the experiment, the product was placed at room temperature for 2 hours, and then the abnormal sound frequency sweep and acoustic parameters were tested. Sinusoidal wave 8Vrms (F0-5KHz) sweeps without abnormal sound, F0 should meet the original specification requirements, and the output sound pressure variation is within ±3dB.

4.2 Max input test

At room temperature, the frequency band F0-5KHz was set, and the sine wave signal of 10W(8.95Vrms) was input into the product, and the frequency was swept according to 30S/ on-30s/off for 60 cycles. After the experiment, the sinusoidal wave swept 8Vrm(F0-5KHz) without abnormal sound.

4.3 High temp life

Under the condition of high temperature +85℃, the frequency band F0-5KHz was set, and the sinusoidal wave signal of 8W(8Vrms) was input into the product for frequency scanning test. The frequency scanning speed was 1.5 seconds for 96 hours continuously. At the end of the experiment, the product was placed at room temperature for 2 hours, and then the abnormal sound frequency sweep and acoustic parameters were tested. Sinusoidal wave 8Vrms (F0-5KHz) sweeps without abnormal sound, F0 should meet the original specifications, and the output sound pressure variation is within ±6dB.

4.4 Low temp life

Under the condition of low temperature -40℃, the frequency band F0-5kHz was set, and the sinusoidal wave signal of 8W(8Vrms) was input into the product for frequency scanning test. The frequency scanning speed was 1.5 seconds for 96 hours continuously. At the end of the experiment, the product was placed at room temperature for 2 hours, and then the abnormal sound frequency sweep and acoustic parameters were tested. Sinusoidal wave 8Vrms (F0-5KHz) sweeps without abnormal sound, F0 should meet the original specifications, and the output sound pressure variation is within ±6dB.

4.5 Constant temp and humidity load test

Under the condition of constant temperature +40±2℃ relative humidity of 92±2%RH, the frequency band F0-5KHz was set, and the sinusoidal wave signal of 8W(8Vrms) was input into the product for frequency sweep at a frequency speed of 1.5 seconds for 48 hours continuously. At the end of the experiment, the product was placed at room temperature for 2 hours, and then the abnormal sound frequency sweep and acoustic parameters were tested. Sinusoidal wave 8Vrms (F0-5KHz) sweeps without abnormal sound, F0 should meet the original specifications, and the output sound pressure variation is within ±6dB.

Downloaded from Arrow.com.

4.6 High temp preservation test

The product was placed in an environment of +85℃ for 96 hours. After the end of the experiment, the product was placed in room temperature for 2 hours and then tested for abnormal sound frequency sweep and acoustic parameters. Sinusoidal wave 8Vrms (F0 -5KHz) sweeps without abnormal sound, F0 should meet the original specification requirements, and the output sound pressure variation is within ±3dB.

4.7 Low temp preservation test

The product was placed in an environment of -40℃ for 96 hours. After the end of the experiment, the product was placed in room temperature for 2 hours and then tested for abnormal sound frequency sweep and acoustic parameters. Sinusoidal wave 8Vrms (F0-5KHz) sweeps without abnormal sound, F0 should meet the original specification requirements, and the output sound pressure variation is within ±3dB.

4.8 Thermal shock test

The product is subjected to 200 times of temperature cycling impact, and the cycling content is as shown in the figure. After the end of the experiment, the product is placed at room temperature for 2 hours, and then abnormal sound frequency sweep and acoustic parameters are tested. Sinusoidal wave 8Vrms (F0-5KHz) sweeps without abnormal sound, F0 should meet the original specifications, and the output sound pressure variation is within ±6dB.

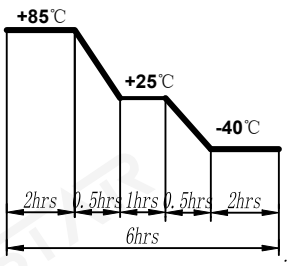

4.9 Drop test

Free fall on concrete 75 cm high once every 3 surfaces for a total of 3 times. After the test, there is no separation, deformation, clearance or cracking in part of the product. The sinusoid wave sweeps 8Vrms (F0-5KHz) without abnormal sound. F0 should meet the original specifications and the variation of output sound pressure is within ±3dB.

Downloaded from Arrow.com.

5. Packing

TBD

Downloaded from Arrow.com.

6. History change record

Version	Change Items	Date	Drawn	Checked	Approved
A0	First version	2021.03.09	Ronnie.Li	Litra.Yang	Peter.Huang

REFERENCE
BE STAR

Downloaded from Arrow.com.

7.Important Notice

7.1 The products mustn't be washed

7.2 Store Condition (packaging)

The products should be stored in the room ,where the temperature/humidity is stable. And avoid such places where there are large temperature changes. Please store the products at the following conditions:

Temperature: -40 to + 95 ℃ Humidity: 15 to 85% R.H.

7.3 Expire Date on Storage

Expire date (Shelf life) of the products is six months after delivered under the conditions of a sealed and an unopened package. Please use the products within six months after delivered.

If you store the products for a long time (more than six months), use carefully because the products may be degraded in the solderability and/or rusty.Please confirm solderability and characteristics for the products regularly.

7.4 Notice on Product Storage

(1) Please do not store the products in a chemical atmosphere (Acids, Alkali, Bases, Organic gas, Sulfides and so on), because the characteristics may be reduced at quality, and/or be degraded in the solderability due to the storage in a chemical atmosphere.

(2) Please use the products immediately after the package is opened, because the characteristics may be reduced at quality, and/or be degraded in the solderability due to storage under the poor condition.

7.5 Rated and Max input power

Rated input power

Rated input power is the maximum (limit) value which can be input to the component intentionally. If the actual input power to component keeps exceeding Rated Input power, it will damage the component acoustic performances and reliability. In the worst case, the component will get broken and no sound.

Max input power

Max input power is the maximum (limit) value for unexpected input power which is caused in the customer's circuit like surge voltage. If the actual input power to component keeps exceeding Maximum input power, it will break the component and cause no sound in a short time. Please note that component will have a risk to get broken if the unexpected input power continues.

The value of input power is set based on the sinusoidal power in the normal speaker use. If the special signal is input to component, the values of Rated and Max input power will be different. Please make a well-investigation at your laboratory in the case of the special signal input.

Downloaded from Arrow.com.