Selection Guide 288
ø22mm XW E-Stops 289

XW Series E-Stops

IDEC

www.IDEC.com/usa/estop

Downloaded from Arrow.com.

X Series E-Stops

Revolutionary "Safe Break Action" Design

The IDEC Emergency Stop switches, the X6, XA, XW, and XN series, include revolutionary new technology that have changed the way E-Stop switches are designed. This "safe break action" concept provides greater levels of human safety and is the first of its kind in the world!

Innovative Design

Conventional E-Stop switches are designed with spring pressure on the Normally Closed (NC) contacts, keeping them in the closed position and allowing the machine to operate. Improper installation or excessive force to the stop button in an emergency may break or dislodge a vital part, causing the spring loaded contact to stay closed. This situation renders the E-Stop incapable of stopping the machine, and can lead to catastrophic events, personal injury and possible loss of life.

Safe Break Action Design

This one-of-a-kind "safe break action" design, found only in the IDEC XA, XW, and XN series, reverses the energy direction and uses the spring-pressure to assure that the NC contacts will open if the emergency switch is damaged or the contact blocks separate due to excessive force. The NC contacts will reliably open, even if they are welded, and stop the machine. Combined with IDEC quality, this is the E-Stop switch you want in a life threatening situation.

Level 4 Safety

X6, XA, XW & XN Series, The Safe Break Action E-Stops!

Internal view while removing the contact block

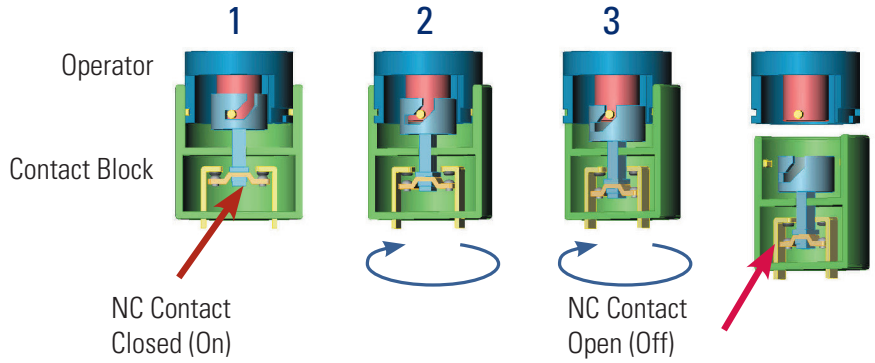

The X Series of E-Stop switches include up to four contacts in a very compact package. In today's automated world, more customers are requiring E-Stop switches with at least three contacts. (Two of the contacts trip the power and the third contact is used to alert a safety-monitoring relay.) Both the XA and XW series switches offer up to four "safe-break" contacts with a depth behind the panel that is half the size of conventional E-Stop switches. This means that there is an additional contact available and the **switches can be used in Level 4 safety category applications.**

IDEC's new E-Stop switches are secured from the rear of the control panel so that the E-Stop cannot be removed from the front. Another unique feature of the XA & XW E-Stop switches is that either a push-turn or push-pull reset method can be used to reset the switches. This eliminates any possible confusion for operators when resetting the switch. The durability and quality of these new E-Stop switches make them extremely reliable. They can withstand the increased high stress caused by panic or a reaction to an emergency situation.

Reach for the "Safe Break Action"

When the contact block is removed from the operator the main contact (NC) is forced to open (OFF). When removing the contact block, the cam provides a direct opening action to open the contact.

Padlock E-Stops

As shown in the diagram, upon latching a traditional E-stop, it is up to the technician to verify and confirm that the machine area is clear and there are no other technicians working before resetting the E-stop and turning on the machine. There is always a chance that the technician might miss someone in the work area before resetting the E-stop, potentially causing injury to that person.

The solution is XN4E series padlock E-Stops, which allow technicians to install their personal padlocks at the spot of actuation of the E-Stop ensuring their own safety. The diagram shows how personal padlocks can be installed. Each one blocks the resetting of the E-stop until all the padlocks are removed. This provides added safety and prevents unauthorized or accidental resetting of the E-stops. A maximum of 20 padlocks can be installed by using lockout hasps.

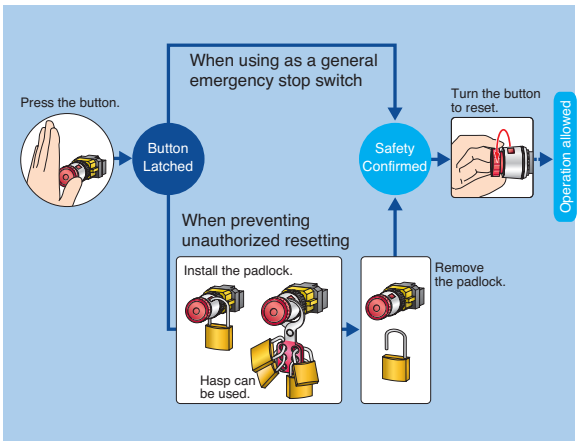

Downloaded from Arrow.com.

Important Safety Information

Reverse Energy Structure

With X Series E-Stops, the potential energy level of the latched status is lower than that of the normal status. When the switch is damaged due to excessive shocks, the NC contacts will turn off, thus stopping the machine (patented design).

Direct Opening Action

Even if the contacts are welded, the force applied on the button directly opens the contact.

Rated Insulation Voltage: 250V
Rated Thermal Current: 2.5A

Safety Interlock Mechanism

Contacts are opened when the operator is locked, and remain opened until the operator is unlocked intentionally. (IEC60947-5; 6:2)

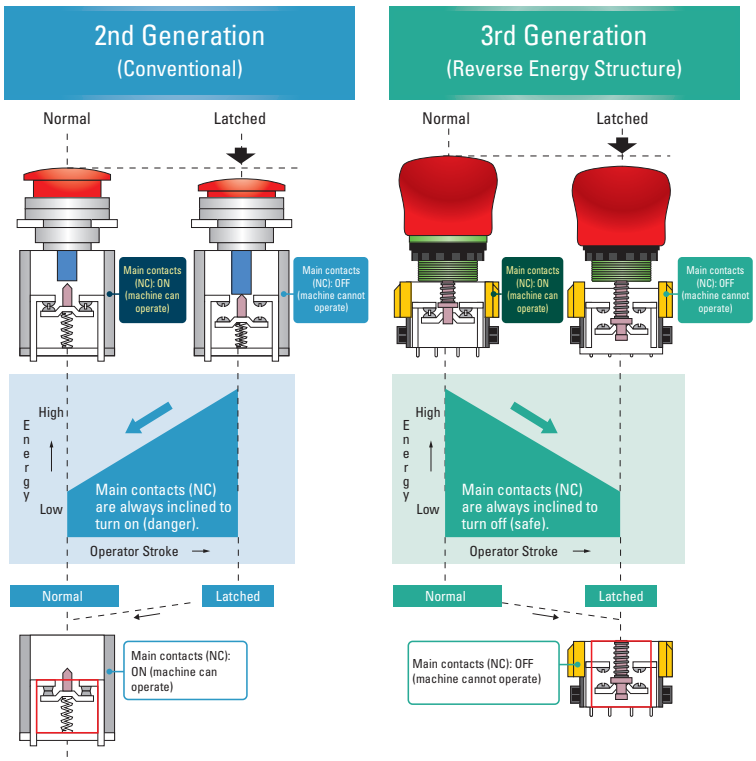

Two E-Stops in One

Pushlock Pull or Turn Reset

The X Series E-Stops can be reset either by pulling or turning the button. This ensures that the reset action will always be different from the make action. With traditional E-Stops, you need to choose between Push-Pull or Pushlock Turn Reset. With the IDEC X Series E-Stops you get both in one switch.

XN4E, padlock type is Turn Reset only.

Pull Reset

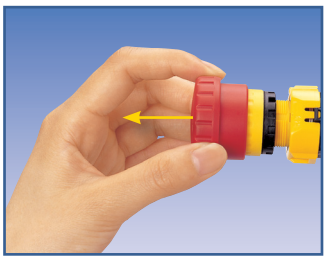

Turn Reset

Compact

Compact Body with Four Contacts

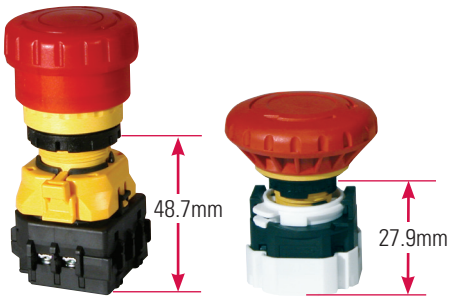

Traditional E-Stop

22mm XW and 16mm XA Series

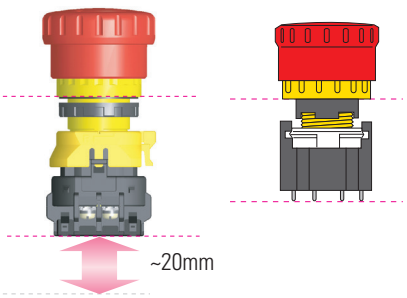

XN Series

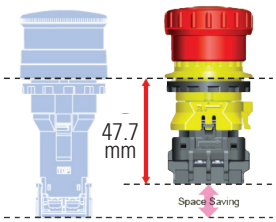

Downloaded from Arrow.com.

X Series E-Stops

Selection Guide

Series	X6	XA	XW	XN
Appearance				
Page	see Switches & Pilot Devices section	see Switches & Pilot Devices section	289	see Switches & Pilot Devices section
Mounting Hole	16mm	16mm	22mm	30mm
Operator Type	Non-Illuminated E-Stops: Pushlock Pull/Turn Reset	Illuminated & Non-Illuminated E-Stops: Pushlock/Turn Reset, Push-Pull		
Reset Action	Pushlock Pull or Turn Reset (both actions available in each switch, except XN4E)			
Contact Configuration	1NC, 2NC	1NO - 1NC, 2NC, 1NO-3NC, 4NC		
Electrical Life	100,000 Minimum			
Mechanical Life	100,000 Minimum	250,000 Minimum		
Termination	Solder/Tab Terminals	PCB & Solder Terminals	Screw Terminals	
Degree of Protection	IP65 (IEC 60529)	IP65 (IEC60529)	Operator: IP65 (IEC60529) Terminal: IP20 (when XW9Z-VL2MF is installed)	
Approvals	c UL us, TÜV, CE, CCC, RCM			

X6 and XA series UL recognized.

Downloaded from Arrow.com.

22mm XW E-Stops

Key features:

- The depth behind the panel can be as little as 46.4 mm for 1 to 4 contacts (with terminal cover) for illuminated and non-illuminated units.
- IDEC's original "Safe break action" ensures that the NC contacts open when the contact block is detached from the operator.
- 1 to 4NC main contacts and 1 or 2NO monitor contacts
- Push-to-lock, Pull or Turn-to-reset operator
- Models with mechanical indicator on the operator body show the normal/latched status (green: normal).
- Safety lock mechanism (IEC60947-5-5, 6.2)
- Degree of protection IP65 (IEC60529)
- Fingersafe (IP20) terminals
- Three button sizes: ø38, ø40 and ø60 mm
- Push-ON illumination type available (40mm mushroom head)
- Direct opening action mechanism (IEC60947-5-5, 5.2, IEC60947-5-1, Annex K)
- RoHS compliant (EU directive 2002/95/EC).
- UL c-UL listed. EN compliant
- UL NISD category emergency stop device (File# E305148)

UL File #E68961

CCC No. 2005010305150897

Specifications

Applicable Standards	IEC60947-5-5, EN60947-5-5, JIS C8201-5-1, UL508, UL991, NFPA79, CSA C22.2 No. 14, GB14048.5
Operating Temperature	Non-illuminated: –25 to +60°C (no freezing), Illuminated: –25 to +55°C (no freezing)
Operating Humidity	45 to 85% RH (no condensation)
Storage Temperature	–45 to +80°C
Operating Force	Push-to-lock: 32N Pull-to-reset: 21N Turn-to-reset: 0.27N·m
Minimum Force Required for Direct Opening Action	80N
Min Operator Stroke Required for Direct Opening Action	4mm
Maximum Operator Stroke	4.5mm
Contact Resistance	50mΩ maximum (initial value)
Contact Material	Gold plated silver
Insulation Resistance	100MΩ minimum (500V DC megger)
Impulse Withstand Voltage	2.5kV
Pollution Degree	3
Operation Frequency	900 operations/hour
Shock Resistance	Operating extremes: 150m/s^2 (15G), Damage limits: 1000m/s^2 (100G)
Vibration Resistance	Operating extremes: 10 to 500Hz, amplitude 0.35mm acceleration 50m/s^2 Damage limits: 10 to 500Hz, amplitude 0.35mm acceleration 50m/s^2
Mechanical Life	250,000 operations minimum
Electrical Life	100,000 operations minimum, (250,000 operations minimum @ 24V AC/DC, 100mA)
Degree of Protection	Operator: IP65 (IEC60529) Terminal: IP20 (when XW9Z-VL2MF is installed)
Terminal Style	M3.0 screw terminal
Recommended Tightening Torque for Locking Ring	2.0N·m
Wire Size	16 AWG max
Weight	ø40mm: 72g ø60mm: 81g

Downloaded from Arrow.com.

Overview
XW Series E-Stops
Interlock Switches
Enabling Switches
Safety Control
Light Curtains
AS-Interface Safety at Work

Part Numbers

Standard Button Without Mechanical Indicator

Style	Operator Type	Monitor Contact	Main Contact	Part Number
Non-Illuminated	40mm Mushroom	1NO	1NC	XW1E-BV411M-R
		–	2NC	XW1E-BV402M-R
		2NO	2NC	XW1E-BV422M-R
		1NO	3NC	XW1E-BV413M-R
		–	4NC	XW1E-BV404M-R
	60mm Mushroom	1NO	1NC	XW1E-BV511M-R
		–	2NC	XW1E-BV502M-R
		2NO	2NC	XW1E-BV522M-R
		1NO	3NC	XW1E-BV513M-R
		–	4NC	XW1E-BV504M-R
Illuminated [1]	40mm Mushroom with built-in 24V AC/DC LED	1NO	1NC	XW1E-LV411Q4M-R
		–	2NC	XW1E-LV402Q4M-R
		2NO	2NC	XW1E-LV422Q4M-R
		1NO	3NC	XW1E-LV413Q4M-R
		–	4NC	XW1E-LV404Q4M-R
	40mm Mushroom Push-ON LED [2]	1NO	2NC	XW1E-TV412Q4M-R

1. The light is independent of the position of the switch, except for push-on LED type.
2. The light only operates when the switch is pressed as it is internally wired.

Smooth Button With Mechanical Indicator

Style	Operator Type	Monitor Contact	Main Contact	Part Number
Non-Illuminated	38mm Mushroom	–	1NC	XW1E-BV4TG01MR
		–	2NC	XW1E-BV4TG02MR
		–	3NC	XW1E-BV4TG03MR
		–	4NC	XW1E-BV4TG04MR
		1NO	1NC	XW1E-BV4TG11MR
		1NO	2NC	XW1E-BV4TG12MR
		1NO	3NC	XW1E-BV4TG13MR
		2NO	4NC	XW1E-BV4TG22MR
Illuminated	38mm Mushroom with built-in 24V AC/DC LED [1]	–	1NC	XW1E-LV4TG01Q4MR
		–	2NC	XW1E-LV4TG02Q4MR
		–	3NC	XW1E-LV4TG03Q4MR
		–	4NC	XW1E-LV4TG04Q4MR
		1NO	1NC	XW1E-LV4TG11Q4MR
		1NO	2NC	XW1E-LV4TG12Q4MR
		1NO	3NC	XW1E-LV4TG13Q4MR
		2NO	2NC	XW1E-LV4TG22Q4MR

Note: Pushlock pull/turn reset switches are locked when pressed, and reset when pulled or turned clockwise.
1. LED lamp is not removable.

XW Series EMO Switches

Style	NC Main Contact	NO Monitor Contact	Part Number
40mm Mushroom	1NC	-	XW1E-BV401M-RH-EMO
	2NC	-	XW1E-BV402M-RH-EMO
	3NC	-	XW1E-BV403M-RH-EMO
	4NC	-	XW1E-BV404M-RH-EMO
	1NC	1NO	XW1E-BV411M-RH-EMO
	2NC	1NO	XW1E-BV412M-RH-EMO
	3NC	1NO	XW1E-BV413M-RH-EMO
	2NC	2NO	XW1E-BV422M-RH-EMO

FB Enclosures with XW E-Stops

	40mm Push-lock Turn/Pull Reset Non-Illuminated	2NC	–	FB1W-XW1E-BV402MR
		1NC	1NO	FB1W-XW1E-BV411MR
		2NC	2NO	FB1W-XW1E-BV422MR
		3NC	1NO	FB1W-XW1E-BV413MR
		4NC	–	FB1W-XW1E-BV404MR
	40mm Push-lock Turn/Pull Reset Illuminated*	2NC	–	FB1W-XW1E-LV402MR
		1NC	1NO	FB1W-XW1E-LV411MR
		2NC	2NO	FB1W-XW1E-LV422MR
		3NC	1NO	FB1W-XW1E-LV413MR
		4NC	–	FB1W-XW1E-LV404MR
	60mm Push-lock Turn/Pull Reset Non-Illuminated	2NC	–	FB1W-XW1E-BV502MR
		1NC	1NO	FB1W-XW1E-BV511MR
		2NC	2NO	FB1W-XW1E-BV522MR
		3NC	1NO	FB1W-XW1E-BV513MR
		4NC	–	FB1W-XW1E-BV504MR

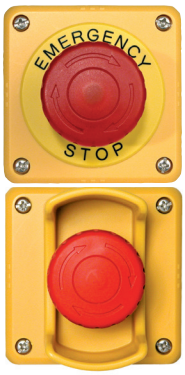

For added safety, Switch Guards and Nameplates can be used with E-Stop Enclosures

*LED illumination voltage: 24V AC/DC

Downloaded from Arrow.com.

Contact Ratings

Rated Insulation Voltage (Ui)				250V		
Rated Current (Ith)				5A		
Rated Operating Voltage (Ue)				30V	125V	250V
Rated Operating Current	Main Contacts (NC)	AC 50/60Hz	Resistive Load (AC-12)	–	5A	3A
			Inductive Load (AC-15)	–	3A	1.5A
		DC	Resistive Load (DC-12)	2A	0.4A	0.2A
			Inductive Load (DC-13)	1A	0.22A	0.1A
	Monitor Contacts (NO)	AC 50/60Hz	Resistive Load (AC-12)	–	1.2A	0.6A
			Inductive Load (AC-14)	–	0.6A	0.3A
		DC	Resistive Load (DC-12)	2A	0.4A	0.2A
			Inductive Load (DC-13)	1A	0.22A	0.1A

Minimum applicable load: 5V AC/DC, 1mA (reference value).
The rated operating currents are measured at resistive/inductive load types specified in IEC 60947-5-1.

Illuminated Unit LED Ratings

Operating Voltage	Current
24V AC/DC ±10%	15mA

Mounting Hole Layout

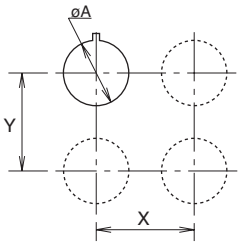

Measurements

Size	øA	X & Y
40mm	$22.3^{+0.4}$	70mm min

Panel Cutout

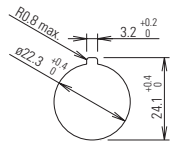

Depth Behind the Panel

Depth (mm)	Description
46.4	with indicator, 1 - 4 contacts, both illuminated and non-illuminated
48.7	w/o indicator, 1 - 4 contacts, both illuminated and non-illuminated

Part Number Key

XW1E - L V 4 TG 11 Q4MR

Illumination
B: Non-Illuminated
L: Illuminated LED
T: Illuminated Push-ON LED

Mushroom Size
4: ø40mm
5: ø60mm (non-illuminated only)

Indicator
TG: w/green mechanical indicator
blank: w/o indicator

Contact Configuration
11: 1NO - 1NC
02: 2NC
13: 1NO - 3NC
04: 4NC
22: 2NO-2NC
12: 1NO-2NC (Push-ON LED only)
01: 1NC (EMO switch only)
03: 3NC (EMO switch only)

Color
R: red with indicator
-R: red w/o indicator
-RH-EMO: red w/o indicator with EMO engraving

Voltage Code
Blank: Non-illuminated
Q4: Illuminated 24V AC/DC

Terminal Arrangements (Bottom View)

4NC **1NO-3NC** **2NC** **1NO-1NC** **2NO-2NC** **1NO-2NC**

Non-Illuminated

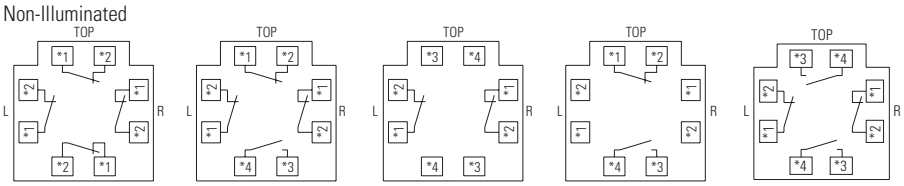

Push-ON

Illuminated

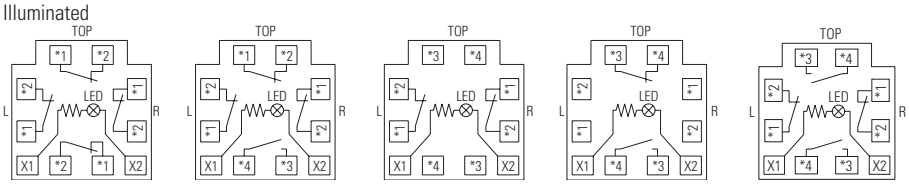

Terminal Marking Description

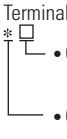

- Contact Type
  1-2: NC main contact
  3-4: NO monitor contact
- Contact Number (1-4)
  Starting with the contact on TOP in a counterclockwise direction.
  Note:
  1: contact on the TOP
  2: contact on the Left
  3: contact on the Bottom
  4: contact on the Right

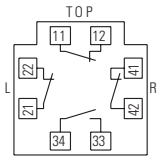

(Example: 1NO-3NC contact)

Downloaded from Arrow.com.

Overview
XW Series E-Stops
Interlock Switches
Enabling Switches
Safety Control
Light Curtains
AS-Interface Safety at Work

Dimensions (mm)

XW Standard Button Non-Illuminated Without Indicator (with terminal cover)

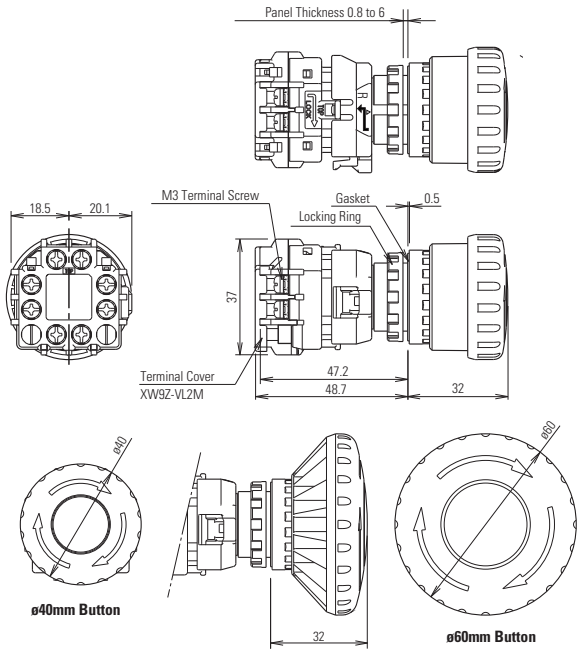

XW Standard Button LED Illuminated/Push-ON Without Indicator (with terminal cover)

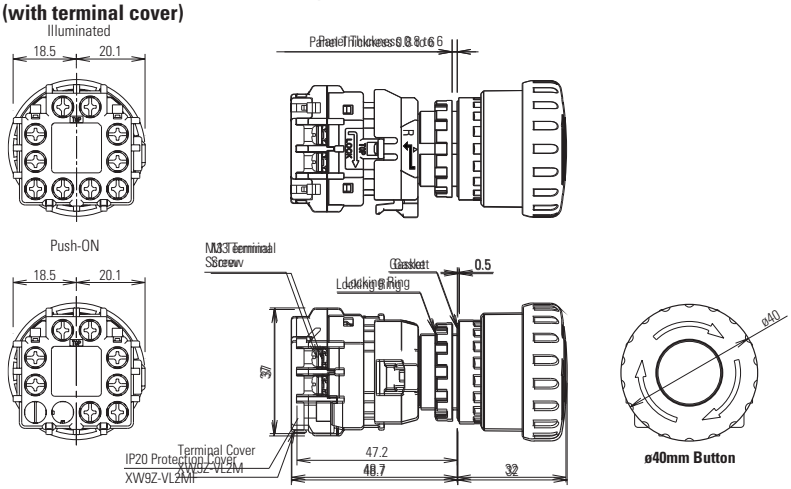

XW Smooth Button Non-Illuminated With Indicator (with terminal cover)

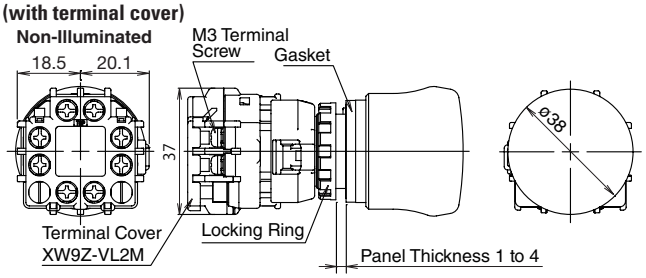

XW Smooth Button LED Illuminated/Push-ON With Indicator (with terminal cover)

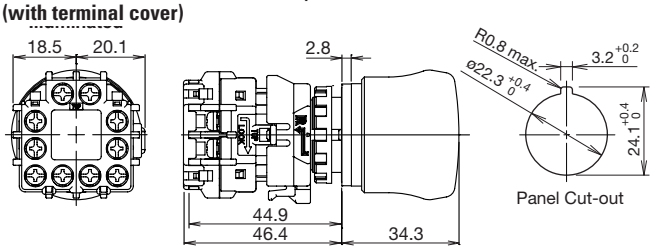

EMO

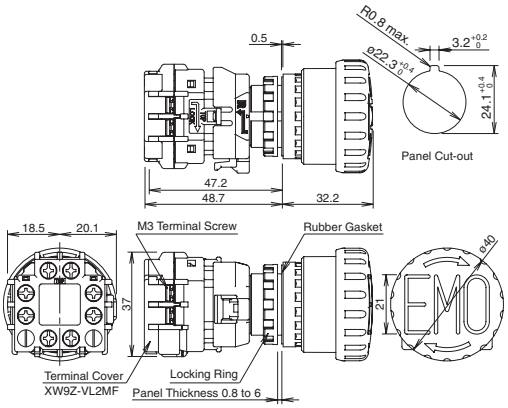

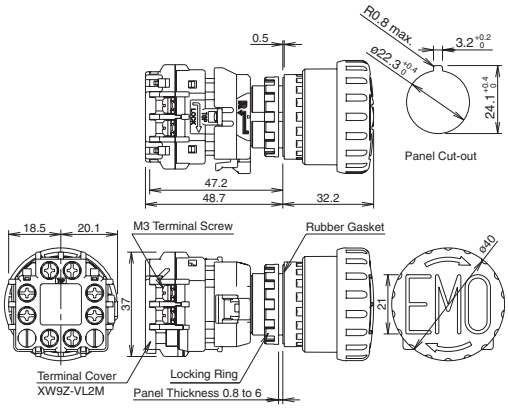

Downloaded from Arrow.com.

Accessories: Terminal Covers

Appearance	Description	Part Numbers
	Terminal Cover for contact block	XW9Z-VL2M
	IP20 Fingersafe Cover	XW9Z-VL2MF

Accessories: Nameplates

Appearance	Legend	Part Number	Inner Ø	Outer Ø
	(blank)	HWAV-0	22mm	60mm
	"Emergency Stop"	HWAV-27	22mm	60mm
	(blank)	HWAV5-0	22mm	80mm
	"Emergency Stop"	HWAV5-27	22mm	80mm

Use 60mm nameplates for 39mm and 40mm mushroom buttons and 80mm nameplates for 60mm mushroom buttons.

Accessories: Shrouds

Appearance	Part Numbers	E-Stop Types	Applicable Standards
	HW9Z-KG1	38mm, 40mm Mushroom Head	SEMI S2-0703, 12.5.1 Compliant
	HW9Z-KG2	38mm, 40mm, and 60mm Mushroom Head	SEMI S2-0703, 12.5.1 & SEMATECH Compliant
	HW9Z-KG3	38mm, 40mm Mushroom Head	SEMI S2 Compliant (Approved by TUV)
	HW9Z-KG4	38mm, 40mm Mushroom Head	SEMI S2 Compliant (Approved by TUV) & SEMATECH

Operating Instructions

Removing the Contact Block

First unlock the operator button. Grab the bayonet ring ① and pull back the bayonet ring until the latch pin clicks ②, then turn the contact block counter-clockwise and pull out ③.

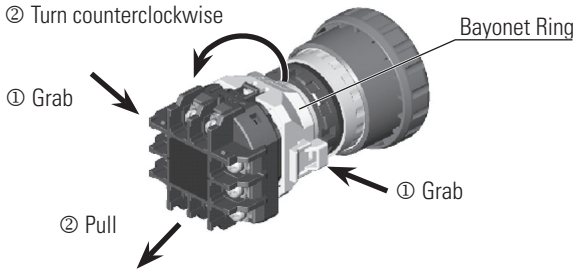

Notes for removing the contact block

1. When the contact block is removed, the monitor contact (NO contact) is closed.
2. While removing the contact block, do not exert excessive force, otherwise the switch may be damaged.
3. An LED lamp is built into the contact block for illuminated pushbuttons. When removing the contact block, pull the contact block straight to prevent damage to the LED lamp. If excessive force is exerted, the LED lamp may be damaged and fail to light.

Panel Mounting

Remove the locking ring from the operator and check that the rubber gasket is in place. Insert the operator from panel front into the panel hole. Face the side without thread on the operator with TOP marking upward, and tighten the locking ring using ring wrench MW9Z-T1 to a torque of 2.0 N·m maximum.

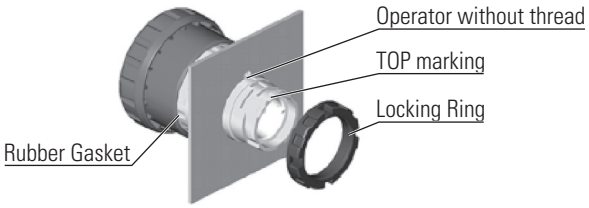

Notes for Panel Mounting

To prevent the XW emergency stop switch from rotating when resetting from the latched position, use of an anti-rotation ring (HW9Z-RL) or a nameplate is recommended.

Installing the Contact Block

First unlock the operator button. Align the small ▼ marking on the edge of the operator with the small ▲ marking on the yellow bayonet ring. Hold the contact block, not the bayonet ring. Press the contact block onto the operator and turn the contact block clockwise until the bayonet ring clicks.

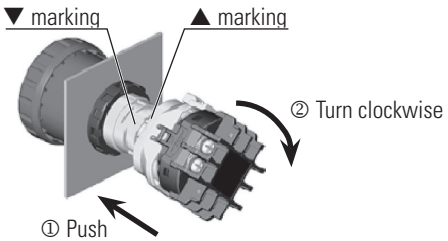

Downloaded from Arrow.com.

Notes for installing the contact block

Make sure that the bayonet ring is in the locked position. Check that the two projections on the bayonet ring are securely in place.

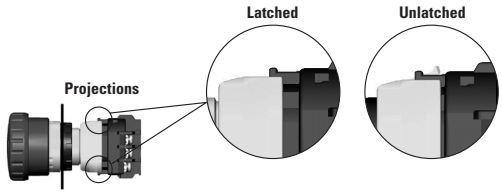

Wiring

The applicable wire size is 16 AWG maximum.

Screw Terminal

1. Wire thickness: AWG18 to 16
2. Tighten the M3 terminal screw to a tightening torque of 0.6 to 1.0 N·m.

Installing and Removing Terminal Covers

XW9Z-VL2M

To install the terminal cover, align the TOP marking on the terminal cover with the TOP marking on the contact block. Place the two projections on the bottom side of the contact block into the slots in the terminal cover. Press the terminal cover toward the contact block.

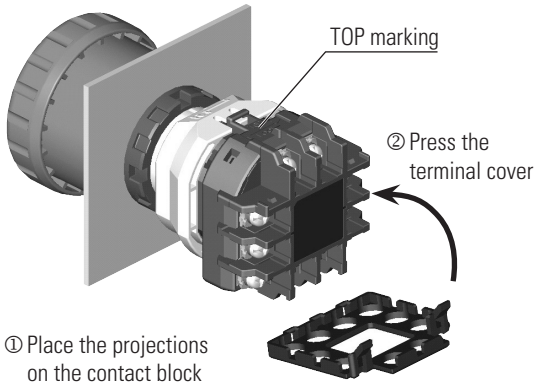

To remove the terminal cover, pull out the two latches on the top side of the terminal cover. Do not exert excessive force to the latches, otherwise the latches may break.

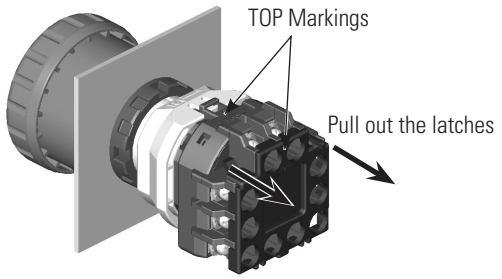

IP20 Protection Terminal Cover XW9Z-VL2MF

To install the IP20 protection cover, align the TOP marking on the cover with the TOP marking on the contact block, and press the cover toward the contact block.

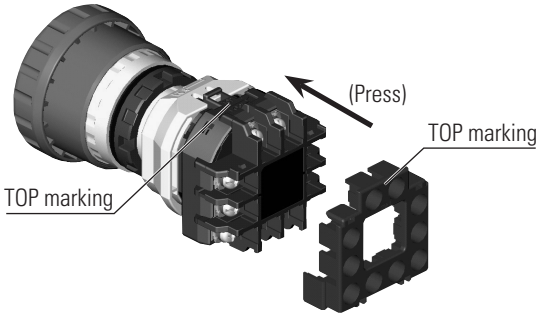

1. Once installed, the XW9Z-VL2MF cannot be removed.
2. The XW9Z-VL2MF cannot be installed after wiring.
3. With the XW9Z-VL2MF installed, crimping terminals cannot be used.
4. Make sure that the XW9Z-VL2MF is securely installed. IP20 protection cannot be achieved when installed loosely, and electric shocks may occur.

Contact Bounce

When the button is reset by pulling or turning, the NC main contacts will bounce. When pressing the button, the NO monitor contacts will bounce.

When designing a control circuit, take the contact bounce time into consideration (reference value: 20 ms).

LED Illuminated Switches

LED lamp is built into the contact block and cannot be replaced.

Installing the Anti-rotation Ring HW9Z-RL

Align the side without thread on the operator with TOP marking, the small s marking on the anti-rotation ring, and the recess on the mounting panel.

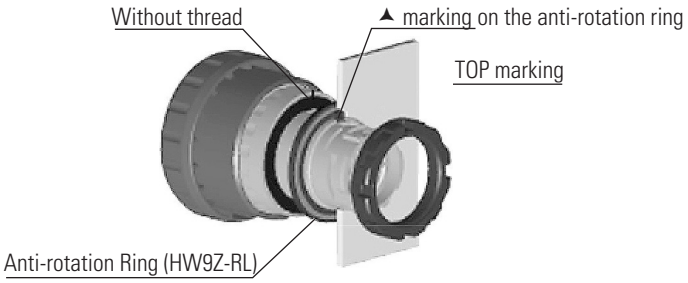

Downloaded from Arrow.com.