REVISIONS					
P	LTR	DESCRIPTION	DATE	DWN	APVD
	A	NEW RELEASE PER ECO-14-008759	06-10-14	DM	DM
	A1	REVISED PER PCN E-20-005671	17APR2020	AP	IG

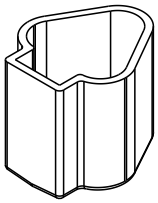

3D VIEW

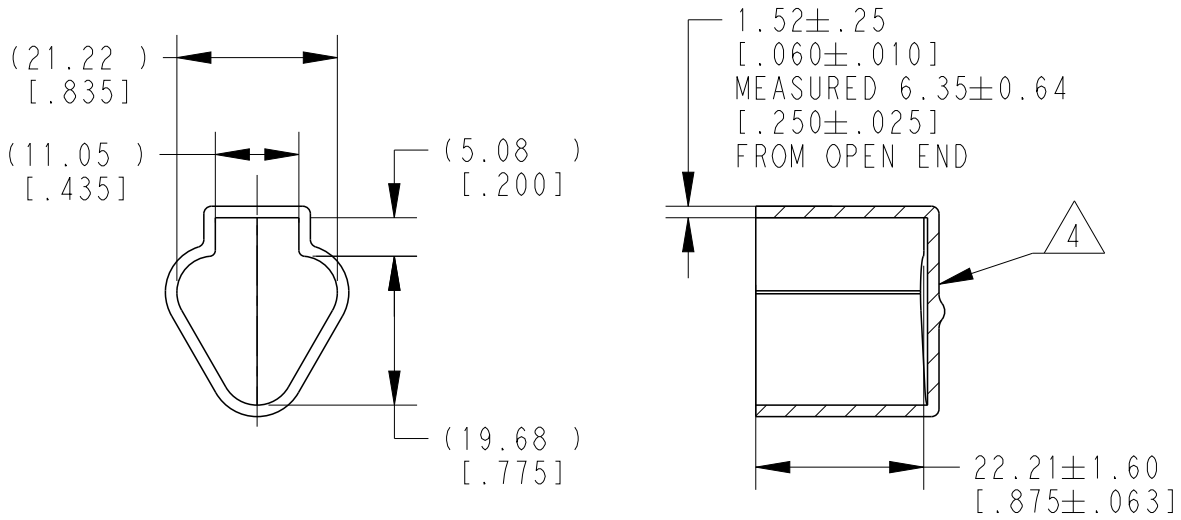

5. SMALL NON-FILLS ARE ACCEPTABLE INSIDE OF PART, INCLUDING SUPPLIER MARKING.

4. SMALL MATERIAL EXTENSION IS ACCEPTABLE ON THIS END ALL AROUND. WALL THICKNESS ON THIS END MAY VARY.

3. THIS ACCESSORY PART IS PROVIDED WITHOUT TYPICAL TRANSPORTATION INDUSTRY PROCESS CONTROLS. NO VALIDATION TESTING HAS BEEN PERFORMED. CUSTOMER IS RESPONSIBLE FOR DETERMINING PRODUCT PERFORMANCE AND SUITABILITY FOR APPLICATION.

2. TEMPERATURE RATING: -29°C TO +100°C [-20°F TO +212°F]

1. THIS PART IS USED ON DT04-3P WITH ANY MODIFICATION.

NOTES:

TE INTERNAL PN	DEUTSCH PN
DT3P-DC	DT3P-DC

THIS DRAWING IS UNPUBLISHED. RELEASED FOR PUBLICATION 2020
© COPYRIGHT 2020 TE Connectivity. All Rights Reserved. ALL RIGHTS RESERVED.

DIMENSIONS: MM[INCH]

TOLERANCES UNLESS OTHERWISE SPECIFIED:

0 PLC	±
1 PLC	±
2 PLC	±0.63[.025]
3 PLC	±
4 PLC	±
ANGLES	±5°

DWN D. MEYER 10JUN2014
CHK R. MESSENGER 10JUN2014
APVD D. MEYER 10JUN2014
PRODUCT SPEC
APPLICATION SPEC
WEIGHT 5.00 g

MATERIAL PVC
FINISH GRAY

TE Connectivity

NAME DUST CAP, RECEPTACLE, 3PIN
DT SERIES

SIZE	CAGE CODE	DRAWING NO	RESTRICTED TO
A4	00779	C-DT3P-DC	-

CUSTOMER DRAWING

SCALE 1:1 SHEET 1 OF 1 REV A1

1469-35 (3/13)

Downloaded from Arrow.com.