OMRON

Temperature Monitoring Relay
K8DT-TH

Ideal to prevent heater overheating. Self-latching output to contribute to safe equipment operation.

For the most recent information on models that have been certified for safety standards, refer to your OMRON website.

- Set the temperature with ultra-simple rotary switches.
- Digitally set the temperature to between 0 and 999°C in 1°C increments with one Relay (K8DT-TH1□□).
  (K8DT-TH2□□: Set to between 0 and 1,800°C in 10°C increments.)
- Connect a thermocouple or platinum resistance thermometer.
- Width of 17.5 mm to reduce space required in panels.
- Push-In Plus Terminal that reduce wiring work.
  The use of cage clamps enables wiring with bare stranded wires.
  Double-insertion holes for crossover wiring (all terminals).
- UL listed for easy shipping to North America.
- Models added with transistor outputs for superior contact reliability.

⚠ Refer to *Safety Precautions* on page 9.

Ordering Information

Temperature Input Models

Power supply voltage	Input types	Setting units (setting range)	Output relays Type	Model
24 V AC/DC	Thermocouple or platinum resistance thermometer	Setting unit: 1°C or 1°F (0 to 999°C/°F)	Relay: SPDT contact output	**K8DT-TH1CD**
			Transistor	**K8DT-TH1TD**
100-240 V AC			Relay: SPDT contact output	**K8DT-TH1CA**
			Transistor	**K8DT-TH1TA**
24 V AC/DC	Thermocouple	Setting unit: 10°C/°F ✻	Relay: SPDT contact output	**K8DT-TH2CD**
			Transistor	**K8DT-TH2TD**
100-240 V AC			Relay: SPDT contact output	**K8DT-TH2CA**
			Transistor	**K8DT-TH2TA**

✻ Refer to Setting Ranges on page 3 for the setting ranges.

Options (Order Separately)
Front Cover

Appearance	Model
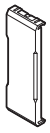	**Y92A-D1A**

Downloaded from Arrow.com.

Ratings and Specifications

Ratings

Power supply voltage		K8DT-TH□□D: 24 VAC 50/60 Hz or 24 VDC K8DT-TH□□A: 100 to 240 VAC 50/60 Hz
Allowable voltage range		85% to 110% of power supply voltage
Power consumption		24 VAC or 24 VDC: 2.1 VA max. or 1.2 W max. 100 to 240 VAC: 3.1 VA max.
Rated insulation voltage		253 VAC
Sensor inputs	**K8DT-TH1**	Thermocouple: K, J, T, E; Platinum-resistance thermometer: Pt100, Pt1000
	K8DT-TH2	Thermocouple: K, J, T, E, B, R, S, PL II
Setting method		Set of three rotary DIP switches
Indicators		Power (PWR): Green, Alarm (ALM): Red
Output form		Relay Output: SPDT contact Transistor Output: 1
Output relay ratings		Rated load 5 A at 250 VAC (Resistive load) 5 A at 30 VDC (Resistive load) 1 A at 250 VAC (Inductive load) 0.2 A at 48 VDC (Inductive load) Minimum load: 5 VDC, 10 mA (reference values) Mechanical life: 10 million operations min. Electrical life: 5 A at 250 VAC or 30 VDC: 50,000 operations 3 A at 250 VAC/30 VDC: 100,000 operations
Transistor output ratings		Rated voltage: 24 VDC (maximum voltage: 26.4 VDC) Maximum current: 50 mA DC
Ambient operating temperature		–20 to 60°C (with no condensation or icing)
Storage temperature		–25 to 65°C (with no condensation or icing)
Ambient operating humidity		25% to 85% RH (with no condensation)
Storage humidity		25% to 85% RH (with no condensation)
Altitude		2,000 m max.
Applicable wires		Stranded wires, solid wires, or ferrules
Applicable wire size		0.25 to 1.5 mm^2 (AWG24 to AWG16)
Wire insertion force		8 N max. for AWG20 wire
Screwdriver insertion force		15 N max.
Wire stripping length		8 mm
Ferrule length		8 mm
Recommended flat-blade screwdriver		XW4Z-00B (Omron) SZF 0.4 × 2.5 (Phoenix Contact) 210-719 (Wago) SDI 0.4 × 2.5 × 75 (Weidmuller)
Current capacity		10 A (per pole)
Number of insertions		50 times
Case color		N1.5
Case material		PC, UL 94 V-0
Weight		Approx. 100 g
Mounting		Mounts to DIN Track, or screw mounting
Dimensions		17.5 × 90 × 90 mm (W×D×H)

Specifications

Measurement accuracy		K8DT-TH1□□: ±1% of the setting range or ±4 °C, whichever is larger. K8DT-TH2□□: ±1% of the setting range (±1%FS).
Hysteresis width		2°C
Sampling cycle		100 ms
Applicable standards	**Approved standards**	EN 61010-1 Installation environment: Overvoltage category II, pollution level 2
	EMC	EN 61326-1 ✻
	Safety standards	UL 61010-1 (Listing) Korean Radio Waves Act (Act 10564)
Insulation resistance		20 MΩ min. Between all external terminals and the case Between all power supply terminals and all input terminals Between all power supply terminals and all output terminals Between all input terminals and all output terminals
Dielectric strength		3,000 VAC for 1 min Between all external terminals and the case Between all power supply terminals and all input terminals Between all power supply terminals and all output terminals Between all input terminals and all output terminals
Impulse withstand voltage		6 kV (between live terminals and exposed, non-charged metal parts)
Noise immunity		Square-wave noise of 1 μs/100 ns pulse width with 1-ns rise time 100 to 240 VAC: 1,500 V power supply terminal common/normal mode 24 VAC: 1,500 V power supply terminal common/normal mode 24 VDC: 480 V power supply terminal common
Vibration resistance		Frequency: 10 to 55 Hz, 0.35-mm single amplitude 10 sweeps of 5 min each in X,Y, and Z directions
Shock resistance		100 m/s^2, 3 times each in 6 directions along 3 axes
Degree of protection		Terminals: IP20

✻ Industrial Electromagnetic Environment (EN/IEC 61326-1, Table 2)

Downloaded from Arrow.com.

Setting Ranges

K8DT-TH1

Centigrade

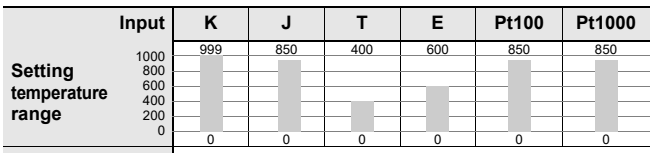

Fahrenheit

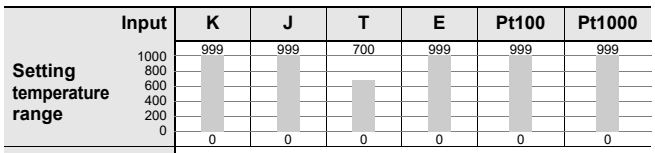

K8DT-TH2

Centigrade

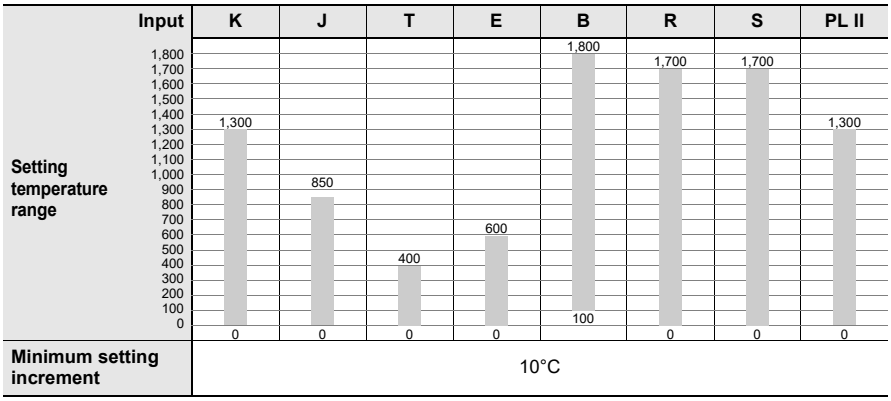

Fahrenheit

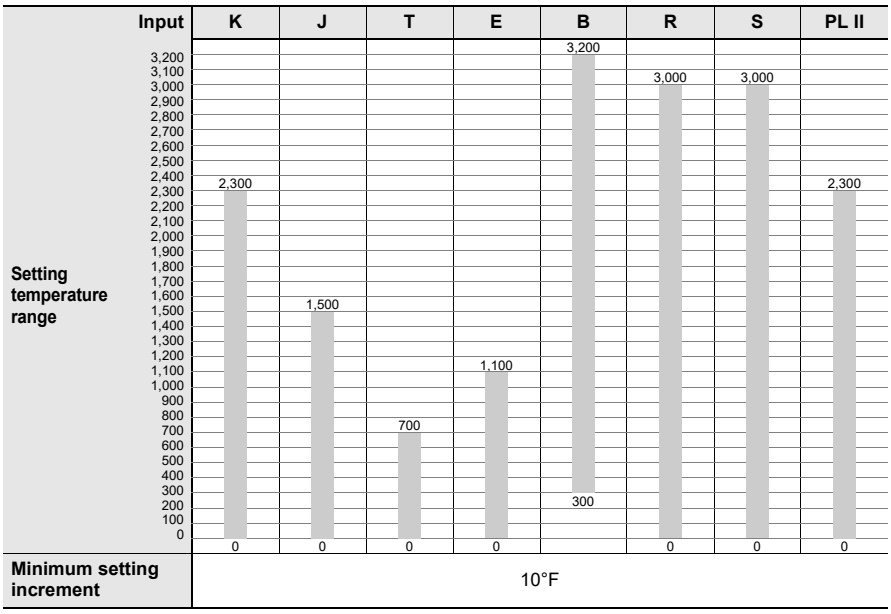

Temperature Input Range

K8DT-TH1	°C		°F	
Input type	Lower limit	Upper limit	Lower limit	Upper limit
K	–20	1019	–40	1039
J	–20	870	–40	1039
T	–20	420	–40	740
E	–20	620	–40	1039
Pt100	–20	870	–40	1039
Pt1000	–20	870	–40	1039
---	---	---	---	---
---	---	---	---	---

K8DT-TH2	°C		°F	
Input type	Lower limit	Upper limit	Lower limit	Upper limit
K	–20	1320	–40	2340
J	–20	870	–40	1540
T	–20	420	–40	740
E	–20	620	–40	1140
B	0	1820	0	3240
R	–20	1720	–40	3040
S	–20	1720	–40	3040
PL II	–20	1320	–40	2340

Downloaded from Arrow.com.

Connections

Terminal Diagram

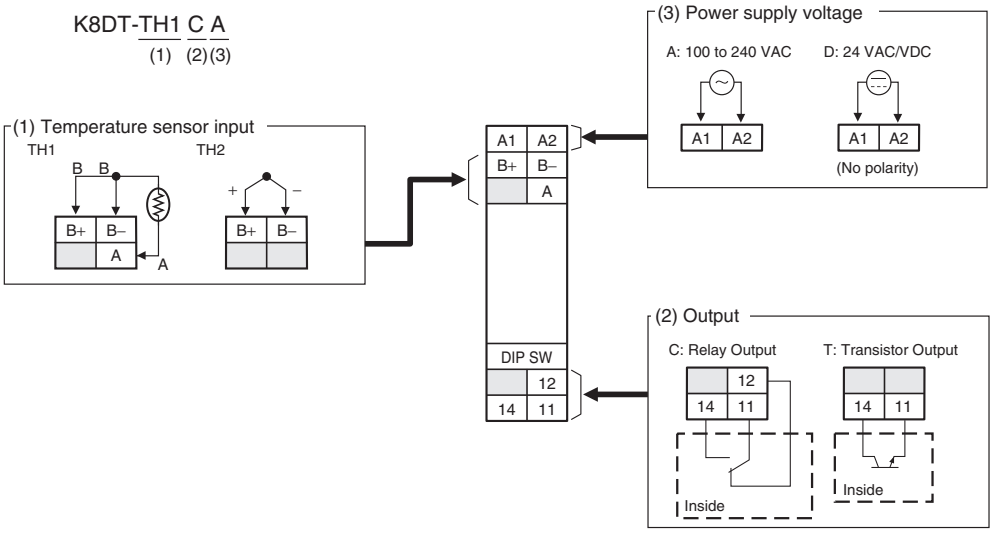

Note: 1. Do not connect anything to terminals that are shaded in gray.
2. There is no polarity for the DC power supply input.

Timing Charts

■ Temperature Alarm: Hysteresis: 2°C or 2°F

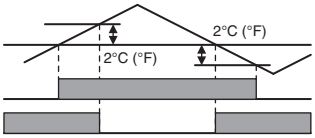

■ Changing between Normally Open and Normally Closed

Note: Other errors: sensor open circuit error, sensor input error, temperature setting error, and memory error.

■ Latched Operation:
Relay outputs remain latched even after the alarm or error is reset.

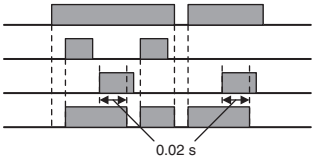

Note: If LATCH_RESET is enabled, alarm status will be retained even if the power supply is cycled. To clear the alarm status, press the LATCH_RESET button. (Default: Latching enabled.)

■ Operation of Indicators

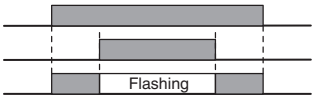

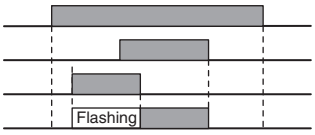

Functions

SV Protection

This function protects (i.e., prohibits changing) the alarm setting, operating method, and modes for the Temperature Monitoring Relay that have been set on the rotary switches and DIP switch.
The protection function is activated by pressing the output latch reset button on the Temperature Monitoring Relay for at least 5 s. The power indicator will flash when the protection is activated.
The protection function can be released by pressing the output latch reset button on the Temperature Monitoring Relay for at least 5 s. The power indicator will light while the protection is being reset.

OMRON
Downloaded from Arrow.com.

Nomenclature

Front

K8DT-TH1

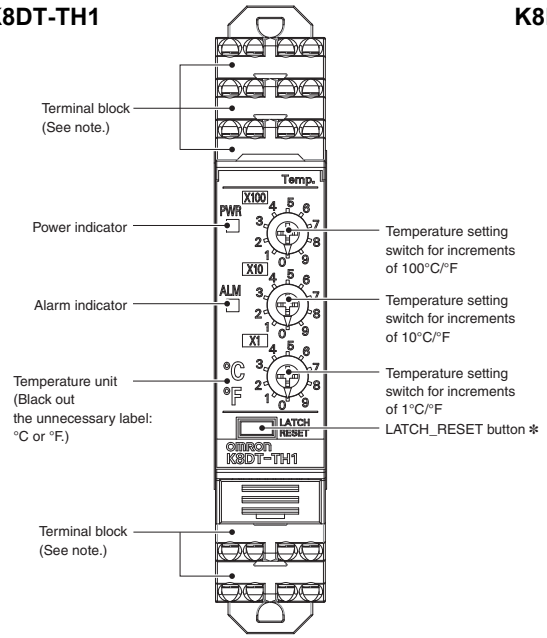

K8DT-TH2

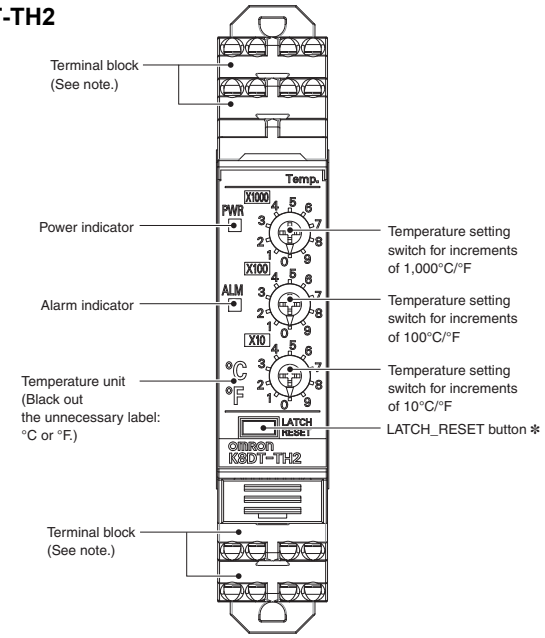

Note: Use solid wires, stranded wires, or ferrules to connect to the terminals.
To maintain the withstand voltage after connecting the terminals, insert 8 mm of exposed conductor into the terminal.

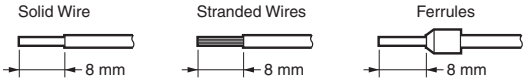

Temperature Setting Switch

The rotary switches are used to set the alarm value.
Point the arrow to the required number.

Error (ALM indicator: Flashing)

One of the following items 1 to 3 has occurred.

1. The sensor circuit is disconnected or the temperature setting is out of the specified range.
2. The temperature setting is out of the specified range.
3. There is a problem in the internal circuits.

Corrections

1. Check for incorrect wiring, circuit disconnections, short circuits, and whether the input type and temperature settings are correct.
2. Disable SV Protect Mode.
3. If the wiring and settings are correct, reset the power supply.
   If the Unit resumes normal operation, the problem may have been caused by noise.
   If the Unit does not resume normal operation, it must be replaced.

✻ Latching and the SV Protect Mode are stored in non-volatile memory. An error may occur if the data is updated more than one million times.

✻ If you press and hold the LATCH_RESET button for 5 seconds or longer, the SV Protect Mode will go into effect.
When SV Protect Mode is enabled, the PWR indicator flashes.
To disable the SV Protect Mode, press and hold the LATCH_RESET Button for at least 5 seconds.

Downloaded from Arrow.com.

Operation Method

Connections

Outputs

For a relay output, the SPDT contacts are output on terminals 11, 12, and 14. For a transistor output, the output is on terminals 11 and 14. The internal circuit of the transistor output is NPN, but application is possible for either a sinking or sourcing output.

In the case of sinking output applications

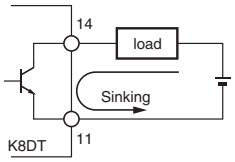

In the case of sourcing output applications

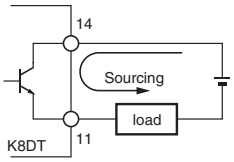

DIP Switch Settings

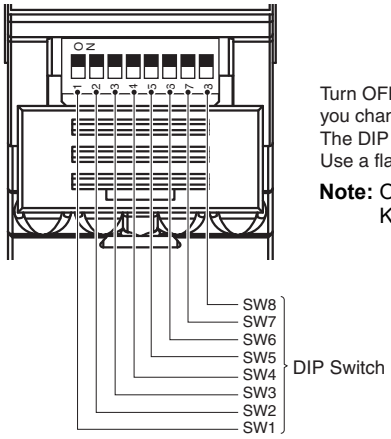

Turn OFF the power to the Temperature Monitoring Relay before you change the DIP switch settings.
The DIP switch settings take effect when the power is turned ON.
Use a flat-blade screwdriver to set the DIP switch pins.

Note: Open the DIP switch cover to set the DIP switch.
Keep the DIP switch cover closed while the power supply to the Relay is ON.

OMRON
Downloaded from Arrow.com.

DIP Switch Functions

K8DT-TH1

R_SW3	100°C/°F units (0 to 9)
R_SW2	10°C/°F units (0 to 9)
R_SW1	1°C/°F units (0 to 9)

Note: The default setting is 0°C.

PIN	ON ○↑ OFF ●↓	1 (ON / OFF)	2	3	4	5	6	7	8
Alarm Mode	Upper limit	●	---	---	---	---	---	---	Not used.
	Lower limit	○	---	---	---	---	---	---	
Latching	With latching	---	●	---	---	---	---	---	
	Without latching	---	○	---	---	---	---	---	
Output drive method	Normally open	---	---	●	---	---	---	---	
	Normally closed	---	---	○	---	---	---	---	
Temperature unit	°C	---	---	---	●	---	---	---	
	°F	---	---	---	○	---	---	---	
Input type	K	---	---	---	---	●	●	●	
	J	---	---	---	---	●	●	○	
	T	---	---	---	---	●	○	●	
	E	---	---	---	---	●	○	○	
	Pt100	---	---	---	---	○	●	●	
	Pt1000	---	---	---	---	○	●	○	
	NOT USE	---	---	---	---	○	○	●	
	NOT USE	---	---	---	---	○	○	○	

Note: All pins are set to OFF by default.

K8DT-TH2

R_SW3	1,000°C/°F units (0 to 3) **Note:** A temperature setting error occurs if this switch is set to a value from 4 to 9.
R_SW2	100°C/°F units (0 to 9)
R_SW1	10°C/°F units (0 to 9)

Note: The default setting is 0°C.

PIN	ON ○↑ OFF ●↓	1 (ON / OFF)	2	3	4	5	6	7	8
Alarm Mode	Upper limit	●	---	---	---	---	---	---	Not used.
	Lower limit	○	---	---	---	---	---	---	
Latching	With latching	---	●	---	---	---	---	---	
	Without latching	---	○	---	---	---	---	---	
Output drive method	Normally open	---	---	●	---	---	---	---	
	Normally closed	---	---	○	---	---	---	---	
Temperature unit	°C	---	---	---	●	---	---	---	
	°F	---	---	---	○	---	---	---	
Input type	K	---	---	---	---	●	●	●	
	J	---	---	---	---	●	●	○	
	T	---	---	---	---	●	○	●	
	E	---	---	---	---	●	○	○	
	B	---	---	---	---	○	●	●	
	R	---	---	---	---	○	●	○	
	S	---	---	---	---	○	○	●	
	PL II	---	---	---	---	○	○	○	

Note: All pins are set to OFF by default.

Downloaded from Arrow.com.

K8DT-TH

Dimensions

(Unit: mm)

Temperature Monitoring Relay

K8DT-TH

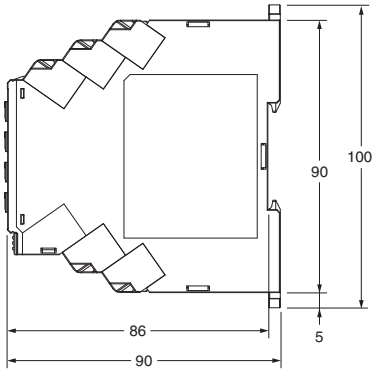

Options (Order Separately)

Front Cover

Y92A-D1A

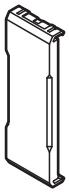

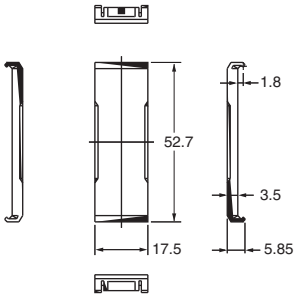

Optional Parts for DIN Track Mounting

DIN Tracks

PFP-100N

PFP-50N

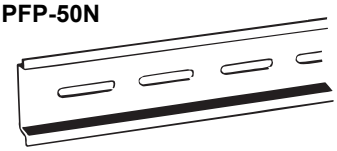

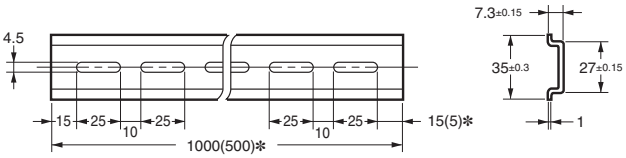

* Dimensions in parentheses are for the PFP-50N.

OMRON
Downloaded from Arrow.com.

Safety Precautions

Be sure to read the precautions for all models in the website at the following URL: http://www.ia.omron.com/.

Warning Indications

CAUTION	Indicates a potentially hazardous situation which, if not avoided, may result in minor or moderate injury or in property damage.
Precautions for Safe Use	Supplementary comments on what to do or avoid doing, to use the product safely.
Precautions for Correct Use	Supplementary comments on what to do or avoid doing, to prevent failure to operate, malfunction, or undesirable effects on product performance.

Meaning of Product Safety Symbols

	Used to warn of the risk of electric shock under specific conditions.
	Used for general prohibitions for which there is no specific symbol.
	Used to indicate prohibition when there is a risk of minor injury from electrical shock or other source if the product is disassembled.
	Used for general mandatory action precautions for which there is no specified symbol.

CAUTION

Doing so may occasionally result in minor injury due to electric shock. Do not touch the Relay while the power supply is ON, except for the adjustment knob and buttons.

There is a risk of minor electrical shock, fire, or device failure. Do not allow any pieces of metal, conductors, or cutting chips that occur during the installation process to enter the product.

Explosions may cause minor injuries. Do not use the product in locations with inflammable or explosive gases.

There is a risk of minor electrical shock, fire, or device failure. Do not disassemble, modify, repair, or touch the inside of the product.

If the setting does not match the element to be controlled, the product may behave unexpectedly and damage the machine or cause accidents. Set the Temperature Monitoring Relay as described below.

- Make sure that all parameters are set suitably for the monitor targets.
- Make sure that the power supply is turned OFF before you change any DIP switch setting. The DIP switch settings take effect when the power is turned ON.

If the Relay fails, monitoring and alarm outputs may fail to operate. This may result in physical damage to the facilities, equipment, or other devices that are connected to it. To reduce this risk, inspect the Relay regularly. To maintain safety in the event of malfunction of the Relay, take appropriate safety measures, such as installing a monitoring device on a separate line.

Use of the product beyond its life may result in contact welding or burning. Make sure to consider the actual operating conditions and use the product within its rated load and electrical life count. The life of the output relay varies significantly with the switching capacity and switching conditions.

If the Relay is used with incorrect wiring, fire may occasionally occur, possibly resulting in physical damage. Check the wiring for mistakes before you turn ON the power supply.

If the wire insertion length is insufficient, fire may occasionally occur, possibly resulting in physical damage. Insert the wires all the way to the back.

The terminal block may be damaged if you insert a flat-blade screwdriver in the release hole with excessive force. Insert the flat-blade screwdriver into the release holes with a force of 15 N or less.

Downloaded from Arrow.com.

Precautions for Safe Use

1. Do not use or store the product in the following locations.
   - Locations subject to water or oil
   - Locations subject to direct radiant heating equipment
   - Outdoor locations or under direct sunlight
   - Locations subject to dust or corrosive gases (sulfurizing gases, ammonia gases, etc.)
   - Locations subject to rapid temperature changes
   - Locations prone to icing and dew condensation
   - Locations subject to vibration and large shocks
   - Locations subject to wind and rain
   - Locations subject to direct radiant heating equipment
   - Locations subject to static electricity or noise
   - Locations subject to insects or small animals
2. Use and store the product in a location where the ambient temperature and humidity are within the specified ranges. If applicable, provide forced cooling.
3. Check terminal polarity when wiring and wire all connections correctly. The power supply terminals do not have polarity.
4. Do not wire the input and output terminals incorrectly.
5. Make sure the power supply voltage and loads are within the specifications and ratings for the product.
6. Make sure the type of the thermocouple matches the input type that the Temperature Monitoring Relay is designed for.
7. If you need to extend the length of the lead wires on the thermocouple, make sure to match the type of thermocouple and always use compensating conductors.
8. Point the arrows on the rotary switches to the required numbers. Do not set a switch midway between two positions. Malfunction could result from an improper setting.
9. To extend the lead wires on the platinum resistance thermometer, use lead wires with a low resistance (5 Ω or less per wire), and make the resistance equal on all three lead wires.
10. Make sure the ferrule terminals for wiring are of the specified size.
11. The stripping length is 8 mm. Insert the wires all the way to the back.
12. Do not connect anything to terminals that are not being used.
13. Use a power supply that will reach the rated voltage within 1 second after the power is turned ON.
14. After you turn ON the power, it takes 2 seconds for the outputs of the Temperature Monitoring Relay to stabilize. Take this time into account when you design the control panel.
15. Allow at least 30 minutes for the product to warm up. During this time, the correct temperature will not be detected and the output may malfunction.
16. Keep wiring separate from high voltages and power lines that draw large currents. Do not place product wiring in parallel with or in the same path as high-voltage or high-current lines.
17. Do not install the product near equipment that generates high frequencies or surges.
18. The product may cause incoming radio wave interference. Do not use the product near radio wave receivers.
19. Install an external switch or circuit breaker and label it clearly so that the operator can quickly turn OFF the power supply.
20. When discarding the product, properly dispose of it as industrial waste.
21. Make sure the indicators operate correctly. Depending on the application environment, the indicators may deteriorate prematurely and become difficult to see.
22. The maximum terminal temperature is 80°C. Use wires with a temperature resistance of at least 80°C.
23. Do not use the product if it is accidentally dropped. The internal components may be damaged.
24. Be sure you understand the contents of this catalog and handle the product according to the instructions provided.
25. Do not install the product in any way that would place a load on it.
26. When using the product, remember that the power supply terminals carry a high voltage.
27. The product must be handled only by trained electrician.
28. Prior to operation, check the wiring before you supply power to the product.
29. Do not install the product immediately next to heat sources.
30. Perform periodic maintenance.
31. Do not wire anything to the release holes.
32. When you insert a flat-blade screwdriver into a release hole, do not tilt or twist the screwdriver. The terminal block may be damaged.
33. Insert a flat-blade screwdriver into the release holes at an angle. The terminal block may be damaged if the screwdriver is inserted straight in.
34. Do not allow the flat-blade screwdriver to fall when you are holding it in a release hole.
35. Do not bend a wire past its natural bending radius or pull in it with excessive force. Doing so may break the wires.
36. Do not insert more than one wire into each terminal insertion hole.
37. To prevent wiring materials from smoking or igniting, confirm wire ratings and use the wiring materials given in the following table.

Recommended wire	Stripping length (Ferrules not used)
0.25 to 1.5 mm^2/AWG 24 to 16	8 mm

38. Use only the specified wires for wiring.
39. When wiring the terminals, allow some leeway in the wire length.

Precautions for Correct Use

Observe the following operating methods to prevent failure and malfunction.

1. Use the power supply voltage, input power, and other power supplies and converters with suitable capacities and rated outputs.
2. When cleaning the product, do not use thinners or solvents. Use commercial alcohol.
3. If you use stranded wires, make sure that there are no loose wire strands.
4. If you wire crossovers and connect terminal blocks in parallel, a large current will flow. Make sure that the current does not exceed 10 A.
5. The terminal block may be damaged if the recommended tool is not used. Use the recommended flat-blade screwdriver to operate the release holes.

Correct Mounting Direction, Mounting, and Removing

Mounting to DIN Track

To mount the Relay to a DIN Track, hook the Relay onto the DIN Track and press the Relay in the direction of the arrow until you hear it lock into place.

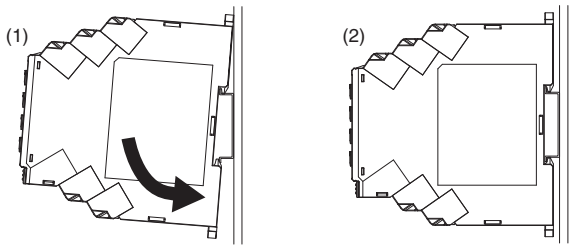

Removing from the DIN Track

To remove the Relay, insert a screwdriver into the hook on the top or bottom and pull out the hook to release the Relay.

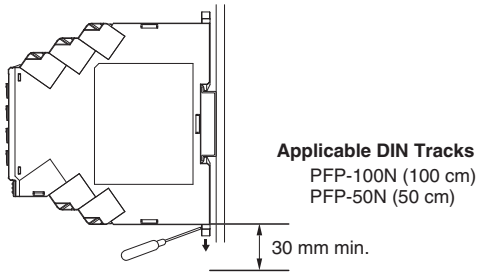

- Leave at least 30 mm of space between the product and other devices to allow easy installation and removal.

Downloaded from Arrow.com.

Screw Mounting

1. Pull out the two hooks on the back of the Relay to the outside until you hear them click in place.
2. Insert M3 screws into the hook holes and secure the Relay.

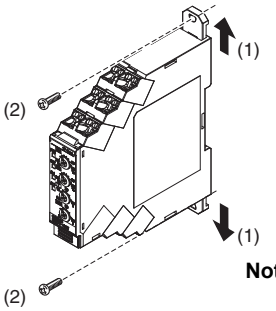

Mounting Hole Dimensions

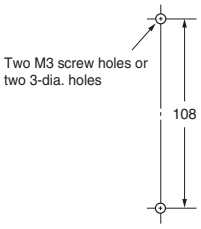

Note: 1. Pull out the hooks to mount the Relay with screws.
2. Recommended tightening torque: 0.5 to 0.6 N·m.

Adjusting the Setting Knobs

- Use a flat-blade screwdriver to adjust the setting knobs.

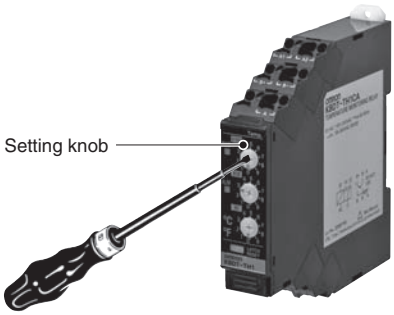

Connecting Wires to the Push-In Plus Terminal Block

Part Names of the Terminal Block

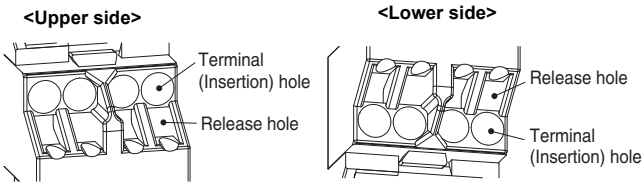

Connecting Wires with Ferrules and Solid Wires

Insert the solid wire or ferrule straight into the terminal block until the end strikes the terminal block.

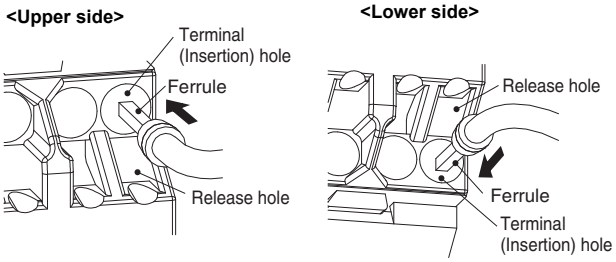

If a wire is difficult to connect because it is too thin, use a flat-blade screwdriver in the same way as when connecting stranded wire.

Connecting Stranded Wires

Use the following procedure to connect the wires to the terminal block.

1. Hold a flat-blade screwdriver at an angle and insert it into the release hole. The angle should be between 10° and 15°.
   If the flat-blade screwdriver is inserted correctly, you will feel the spring in the release hole.
2. With flat-blade screwdriver still inserted into the release hole, insert the wire into the terminal hole until it strikes the terminal block.
3. Remove the flat-blade screwdriver from the release hole.

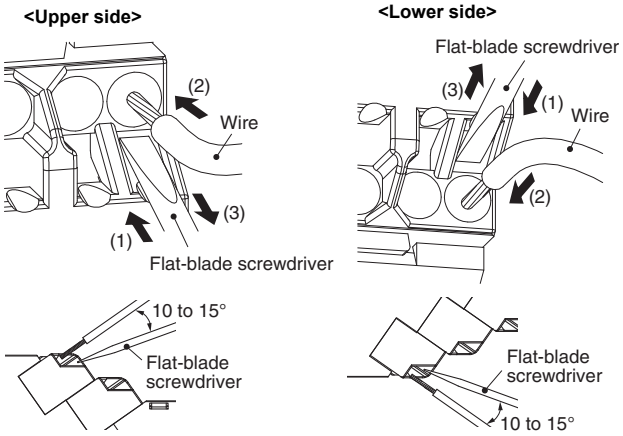

Checking Connections

- After the insertion, pull gently on the wire to make sure that it will not come off and the wire is securely fastened to the terminal block.
- If you use a ferrule with a conductor length of 10 mm, part of the conductor may be visible after the ferrule is inserted into the terminal block, but the product insulation distance will still be satisfied.

Removing Wires from the Push-In Plus Terminal Block

Use the following procedure to remove wires from the terminal block. The same method is used to remove stranded wires, solid wires, and ferrules.

1. Hold a flat-blade screwdriver at an angle and insert it into the release hole.
2. With the flat-blade screwdriver still inserted into the release hole, remove the wire from the terminal insertion hole.
3. Remove the flat-blade screwdriver from the release hole.

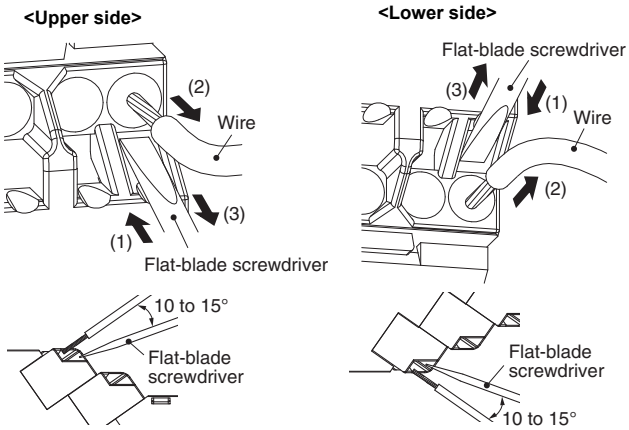

Downloaded from Arrow.com.

Recommended Ferrules and Crimp Tools

Recommended ferrules

Applicable wire		Ferrule Conductor Length (mm)	Stripping length (mm) (Ferrules used)	Recommended ferrules		
(mm^2)	(AWG)			Phoenix Contact product	Weidmuller product	Wago product
0.25	24	8	10	AI 0,25-8	H0.25/12	216-301
		10	12	AI 0,25-10	---	---
0.34	22	8	10	AI 0,34-8	H0.34/12	216-302
		10	12	AI 0,34-10	---	---
0.5	20	8	10	AI 0,5-8	H0.5/14	216-201
		10	12	AI 0,5-10	H0.5/16	216-241
0.75	18	8	10	AI 0,75-8	H0.75/14	216-202
		10	12	AI 0,75-10	H0.75/16	216-242
1/1.25	18/17	8	10	AI 1-8	H1.0/14	216-203
		10	12	AI 1-10	H1.0/16	216-243
1.25/1.5	17/16	8	10	AI 1,5-8	H1.5/14	216-204
		10	12	AI 1,5-10	H1.5/16	216-244
Recommended crimp tool				CRIMPFOX6 CRIMPFOX6T-F CRIMPFOX10S	PZ6 roto	Variocrimp4

Note: 1. Make sure that the outer diameter of the wire coating is smaller than the inner diameter of the insulation sleeve of the recommended ferrule.
2. Make sure that the ferrule processing dimensions conform to the following figures.

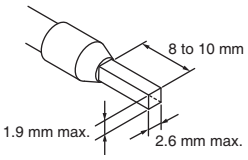

Recommended Flat-blade Screwdriver

Use a flat-blade screwdriver to connect and remove wires.
Use the following flat-blade screwdriver.
The following table shows manufacturers and models as of 2015/Dec.

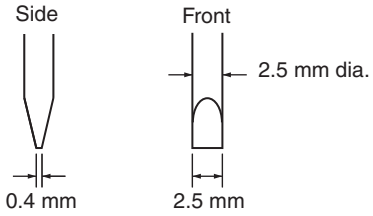

Model	Manufacturer
ESD 0,40×2,5	Wera
SZS 0,4×2,5 SZF 0-0,4×2,5 ✻	Phoenix Contact
0.4×2.5×75 302	Wiha
AEF.2,5×75	Facom
210-719	Wago
SDI 0.4×2.5×75	Weidmuller

✻ OMRON's exclusive purchase model XW4Z-00B is available to order as SZF 0-0,4×2,5 (manufactured by Phoenix Contact).

⚠ EN/IEC Standard Compliance

- Refer to the contents of this datasheet for cable selection and other conditions for compliance with EMC standards.

Precaution on EN Standard Compliance

The K8DT complies with EN 61010-1 when it is built into a panel, but observe the following handling methods to ensure compliance with the requirements of this standard.

Wiring

Overvoltage category II
Pollution degree 2

- Open-frame Device
- If basic, double, or reinforced insulation is required, use the basic, double, or reinforced insulation defined in IEC 60664 that is suitable for the maximum applied voltage for the clearance, solid insulation, and other factors.
- There is basic insulation between the power supply terminals and input terminals.
- There is basic insulation between the power supply terminals and output terminals.
- There is basic insulation between the input terminals and output terminals.
- Operating section must have reinforced or double insulation.
- The sides of the case are not isolated.
- Connect the output contacts (contacts with different polarity) so that they reach the same potential.

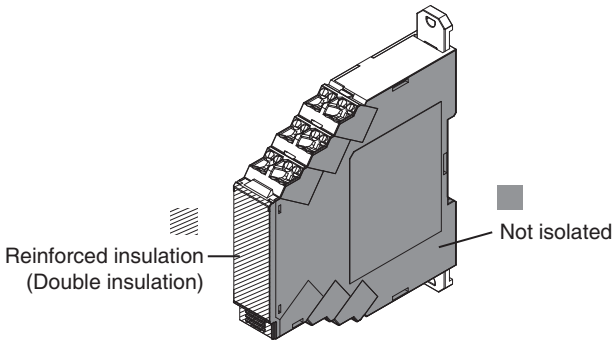

Downloaded from Arrow.com.

Terms and Conditions Agreement

Read and understand this catalog.

Please read and understand this catalog before purchasing the products. Please consult your OMRON representative if you have any questions or comments.

Warranties.

(a) Exclusive Warranty. Omron's exclusive warranty is that the Products will be free from defects in materials and workmanship for a period of twelve months from the date of sale by Omron (or such other period expressed in writing by Omron). Omron disclaims all other warranties, express or implied.

(b) Limitations. OMRON MAKES NO WARRANTY OR REPRESENTATION, EXPRESS OR IMPLIED, ABOUT NON-INFRINGEMENT, MERCHANTABILITY OR FITNESS FOR A PARTICULAR PURPOSE OF THE PRODUCTS. BUYER ACKNOWLEDGES THAT IT ALONE HAS DETERMINED THAT THE PRODUCTS WILL SUITABLY MEET THE REQUIREMENTS OF THEIR INTENDED USE.

Omron further disclaims all warranties and responsibility of any type for claims or expenses based on infringement by the Products or otherwise of any intellectual property right. (c) Buyer Remedy. Omron's sole obligation hereunder shall be, at Omron's election, to (i) replace (in the form originally shipped with Buyer responsible for labor charges for removal or replacement thereof) the non-complying Product, (ii) repair the non-complying Product, or (iii) repay or credit Buyer an amount equal to the purchase price of the non-complying Product; provided that in no event shall Omron be responsible for warranty, repair, indemnity or any other claims or expenses regarding the Products unless Omron's analysis confirms that the Products were properly handled, stored, installed and maintained and not subject to contamination, abuse, misuse or inappropriate modification. Return of any Products by Buyer must be approved in writing by Omron before shipment. Omron Companies shall not be liable for the suitability or unsuitability or the results from the use of Products in combination with any electrical or electronic components, circuits, system assemblies or any other materials or substances or environments. Any advice, recommendations or information given orally or in writing, are not to be construed as an amendment or addition to the above warranty.

See http://www.omron.com/global/ or contact your Omron representative for published information.

Limitation on Liability; Etc.

OMRON COMPANIES SHALL NOT BE LIABLE FOR SPECIAL, INDIRECT, INCIDENTAL, OR CONSEQUENTIAL DAMAGES, LOSS OF PROFITS OR PRODUCTION OR COMMERCIAL LOSS IN ANY WAY CONNECTED WITH THE PRODUCTS, WHETHER SUCH CLAIM IS BASED IN CONTRACT, WARRANTY, NEGLIGENCE OR STRICT LIABILITY.

Further, in no event shall liability of Omron Companies exceed the individual price of the Product on which liability is asserted.

Suitability of Use.

Omron Companies shall not be responsible for conformity with any standards, codes or regulations which apply to the combination of the Product in the Buyer's application or use of the Product. At Buyer's request, Omron will provide applicable third party certification documents identifying ratings and limitations of use which apply to the Product. This information by itself is not sufficient for a complete determination of the suitability of the Product in combination with the end product, machine, system, or other application or use. Buyer shall be solely responsible for determining appropriateness of the particular Product with respect to Buyer's application, product or system. Buyer shall take application responsibility in all cases.

NEVER USE THE PRODUCT FOR AN APPLICATION INVOLVING SERIOUS RISK TO LIFE OR PROPERTY OR IN LARGE QUANTITIES WITHOUT ENSURING THAT THE SYSTEM AS A WHOLE HAS BEEN DESIGNED TO ADDRESS THE RISKS, AND THAT THE OMRON PRODUCT(S) IS PROPERLY RATED AND INSTALLED FOR THE INTENDED USE WITHIN THE OVERALL EQUIPMENT OR SYSTEM.

Programmable Products.

Omron Companies shall not be responsible for the user's programming of a programmable Product, or any consequence thereof.

Performance Data.

Data presented in Omron Company websites, catalogs and other materials is provided as a guide for the user in determining suitability and does not constitute a warranty. It may represent the result of Omron's test conditions, and the user must correlate it to actual application requirements. Actual performance is subject to the Omron's Warranty and Limitations of Liability.

Change in Specifications.

Product specifications and accessories may be changed at any time based on improvements and other reasons. It is our practice to change part numbers when published ratings or features are changed, or when significant construction changes are made. However, some specifications of the Product may be changed without any notice. When in doubt, special part numbers may be assigned to fix or establish key specifications for your application. Please consult with your Omron's representative at any time to confirm actual specifications of purchased Product.

Errors and Omissions.

Information presented by Omron Companies has been checked and is believed to be accurate; however, no responsibility is assumed for clerical, typographical or proofreading errors or omissions.

Downloaded from Arrow.com.

Note: Do not use this document to operate the Unit.

OMRON Corporation **Industrial Automation Company**

Kyoto, JAPAN **Contact : www.ia.omron.com**

Regional Headquarters

OMRON EUROPE B.V.
Wegalaan 67-69, 2132 JD Hoofddorp
The Netherlands
Tel: (31) 2356-81-300 Fax: (31) 2356-81-388

OMRON ELECTRONICS LLC
2895 Greenspoint Parkway, Suite 200
Hoffman Estates, IL 60169 U.S.A.
Tel: (1) 847-843-7900 Fax: (1) 847-843-7787

OMRON ASIA PACIFIC PTE. LTD.
438B Alexandra Road, #08-01/02 Alexandra
Technopark, Singapore 119968
Tel: (65) 6835-3011 Fax: (65) 6835-3011

OMRON (CHINA) CO., LTD.
Room 2211, Bank of China Tower,
200 Yin Cheng Zhong Road,
PuDong New Area, Shanghai, 200120, China
Tel: (86) 21-6023-0333 Fax: (86) 21-5037-2388

Authorized Distributor:

©OMRON Corporation 2016-2023 All Rights Reserved.
In the interest of product improvement,
specifications are subject to change without notice.

CSM_1_7
Cat. No. N209-E1-02 0623 (0316)

Downloaded from Arrow.com.