THIS DRAWING IS UNPUBLISHED. RELEASED FOR PUBLICATION 20
© COPYRIGHT 20 - ALL RIGHTS RESERVED.

REVISIONS					
P	LTR	DESCRIPTION	DATE	DWN	APVD
	A2	REVISED PER ECO-16-010929	28JUL2016	DD	GK
	A3	REVISED PER ECN-22-138797	11FEB2022	CN	JV
	A4	REVISED PER ECN-22-157061	02JUN2022	CN	JV
	A5	REVISED PER ECN-24-263059	06JUN2024	SR	LR

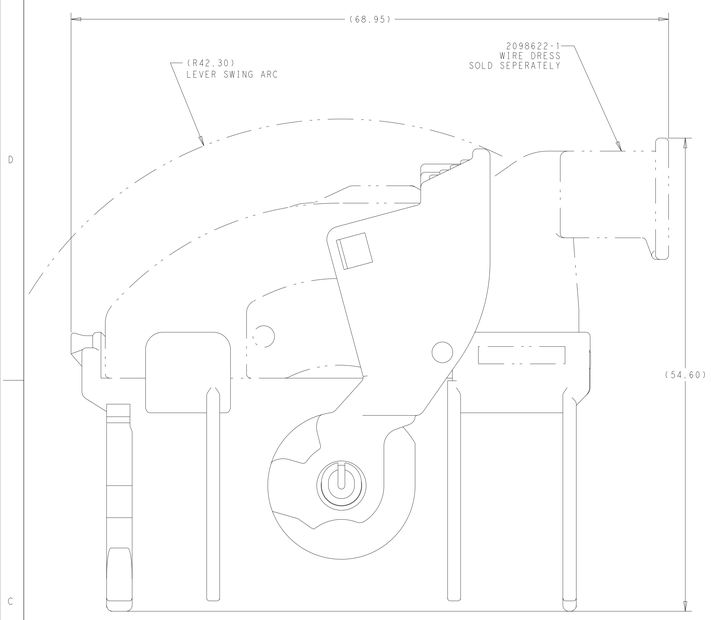

2138731-1

LEVER AND TPA IN ASSEMBLED POSITION,
WITH WIRE DRESS SOLD SEPERATELY. RIGHT EXIT

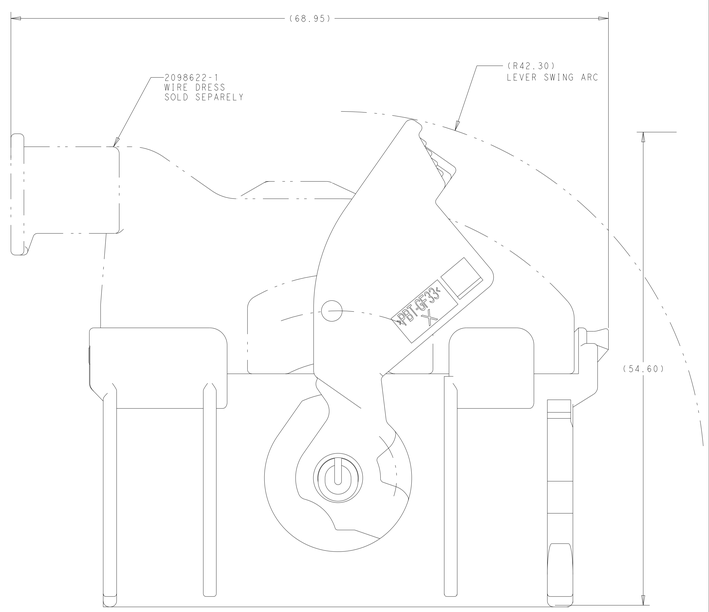

9-2138731-1

LEVER AND TPA IN ASSEMBLED POSITION,
WITH WIRE DRESS SOLD SEPERATELY. LEFT EXIT

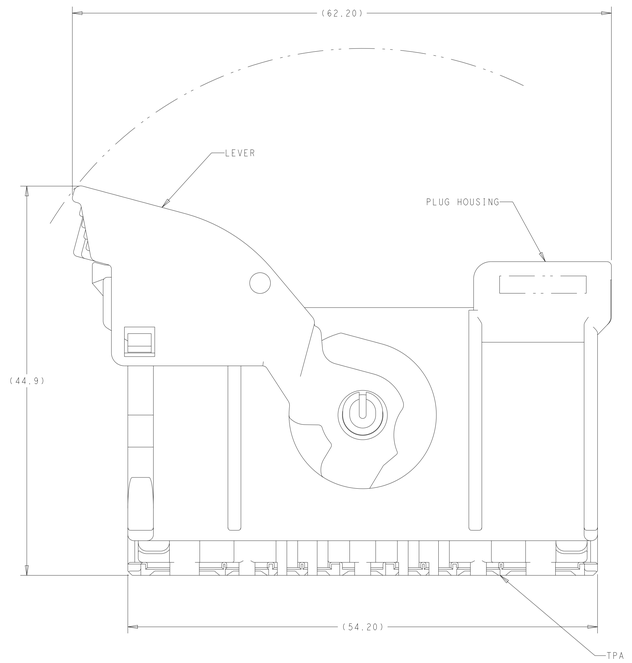

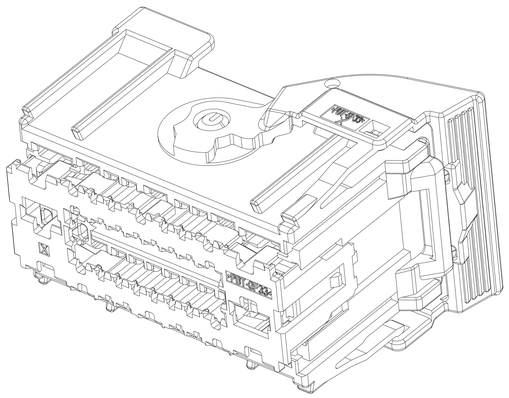

SCALE 3:1

ISOMETRIC VIEWS

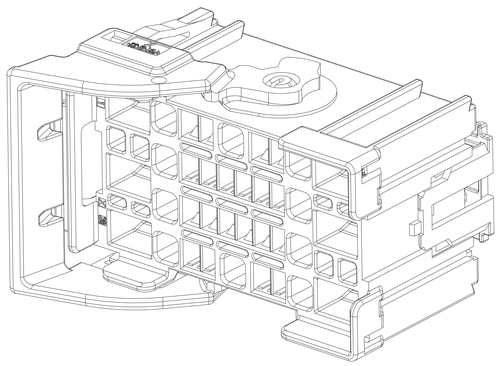

SCALE 3:1

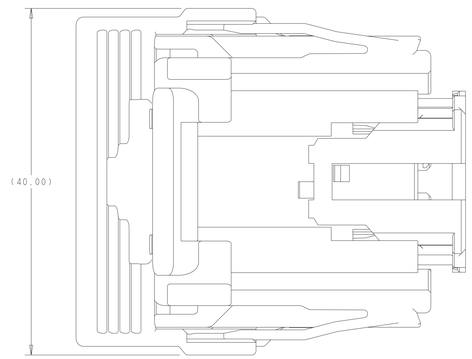

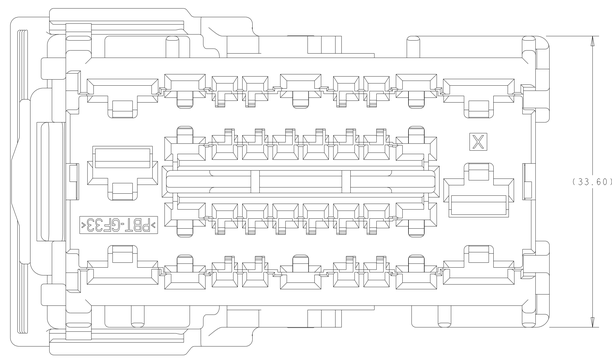

NOTES:
1. TE CONNECTIVITY PART NUMBER 2138731-1 SHOWN IN GENERAL VIEWS WITH TPA AND LEVER IN SHIPPING POSITION.

2. MATERIAL:
PLUG HOUSING: NYLON PA66 35% GLASS FILLED, BLACK
TPA: PBT 33% GLASS FILLED, RED
LEVER: PBT 33% GLASS FILLED, NATURAL

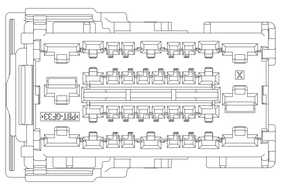

SCALE 2:1

2138731-1
KEYING OPTION "A"

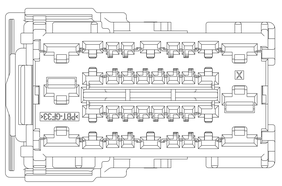

SCALE 2:1

2138731-2
KEYING OPTION "B"

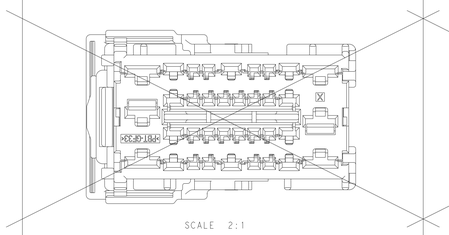

SCALE 2:1

2138731-3
KEYING OPTION "C"

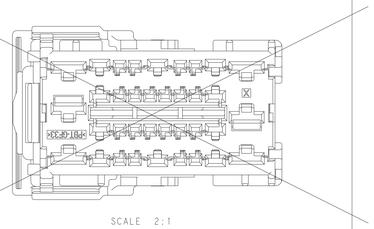

SCALE 2:1

2138731-4
KEYING OPTION "D"

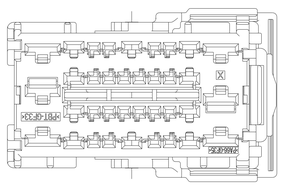

SCALE 2:1

9-2138731-1
KEYING OPTION "A"

STATUS	KEYING OPTION	TE PART NUMBER
RELEASED	A	9-2138731-1
NOT TOOLED	D	2138731-4
NOT TOOLED	C	2138731-3
RELEASED	B	2138731-2
RELEASED	A	2138731-1

THIS DRAWING IS A CONTROLLED DOCUMENT.

DIMENSIONS: mm

TOLERANCES UNLESS OTHERWISE SPECIFIED:
0 PLC ±0.0
1 PLC ±0.3
2 PLC ±0.1
3 PLC ±0.0
4 PLC ±0.0
ANGLES ±3°
FINISH -

MATERIAL - 2

DWN M. HITCHCOCK 19DEC2011
CHK R. HETRICK 19DEC2011
APVD R. HETRICK 19DEC2011
PRODUCT SPEC -
APPLICATION SPEC -
WEIGHT -

TE Connectivity

NAME 36P UNSEALED HYBRID PLUG ASSEMBLY (20X 1.5, 10X 2.8, 6X 6.3)

SIZE A0 | CAGE CODE 00779 | DRAWING NO C-2138731 | RESTRICTED TO

CUSTOMER DRAWING | SCALE 4:1 | SHEET 1 OF 1 | REV A5

4806 (3/13)

Downloaded from Arrow.com.