TRACO POWER

AC/DC Medical Power Supply

TPP 15A-J Series, 15 Watt

- **High power density power supply (open frame)**
- **Certification according to IEC/EN/ES 60601-1 edition 3.2 for 2 x MOPP**
- **Low leakage current <100 µA rated for BF applications**
- **EMC compliance to IEC 60601-1-2 4th edition**
- **Risk management process according to ISO 14971 incl. risk management file**
- **Acceptance criteria for electronic assemblies acc. to IPC-A-610 Level 3**
- **Protection class I and II**
- **Operating up to 5000 m altitude**
- **Ready to meet ErP directive, no load power consumption <100 mW**
- **5-year product warranty**

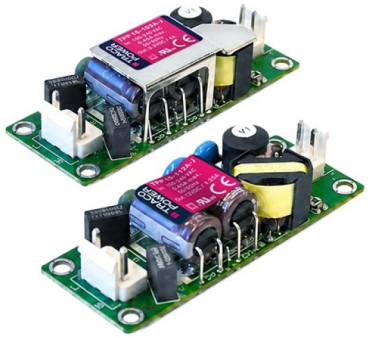

ES 60601-1 IEC 60601-1
UL 62368-1 IEC 60335-1
IEC 62368-1

The TPP 15A-J AC/DC power supplies feature a reinforced double I/O isolation system according to medical safety standards IEC/EN/ES 60601-1 edition 3.2 for 2 x MOPP approved for an operating altitude of 5000 m. The earth leakage current is below 100µA what makes the units suitable for BF (body floating) applications. The excellent efficiency of up to 89% offers a high power density in the packaging format 1.0” x 2.6”. The full load operating temperature range covers –40°C to +60°C while it goes up to 85°C with 50% load derating. The units operate in compliance to the medical EMC emission and immunity levels according to latest standard IEC 60601-1-2 4th edition.

Models

Order Code	Output Power max.	Output Voltage nom. (adjustable)	Output Current max.	Efficiency typ.
TPP 15-103A-J	13.2 W	3.3 VDC (2.97 - 3.63 VDC)	4'000 mA	84 %
TPP 15-105A-J	15 W	5 VDC (4.5 - 5.5 VDC)	3'000 mA	86 %
TPP 15-109A-J		9 VDC (8.1 - 9.9 VDC)	1'670 mA	86 %
TPP 15-112A-J		12 VDC (10.8 - 13.2 VDC)	1'250 mA	87 %
TPP 15-115A-J		15 VDC (13.5 - 16.5 VDC)	1'000 mA	87 %
TPP 15-124A-J		24 VDC (21.6 - 26.4 VDC)	625 mA	88 %
TPP 15-136A-J		36 VDC (32.4 - 39.6 VDC)	417 mA	88 %
TPP 15-148A-J		48 VDC (43.2 - 52.8 VDC)	313 mA	89 %

Downloaded from Arrow.com.

Input Specifications

Input Voltage	- AC Range	Operational Range:	85 - 264 VAC (Full Range)
		Rated Range:	100 - 240 VAC (Full Range)
	- DC Range	Operational Range:	120 - 370 VDC
		Certified Range:	120 - 370 VDC
		Polarity:	+DC: L / –DC: N
			(When operating with DC input voltage an external fuse T 1.0 A / 400 VDC is needed. Allowed types: Littlefuse 477 series, Cooper Bussmann type S505H-1-R, Bel Fuse type 0ADK)
Input Frequency		Operational Range:	47 - 440 Hz
		Certified:	50/60 Hz
Power Consumption	- No load & Vin = 230 VAC		100 mW max. (Ready to meet ErP directive)
	- No load & Vin = 115 VAC		100 mW max.
Input Current	- Full load & Vin = 230 VAC		300 mA max.
	- Full load & Vin = 115 VAC		450 mA max.
Input Inrush Current	- At 230 VAC		40 A max.
	- At 115 VAC		25 A max.
Input Protection			T 1.6 A / 250 VAC (Internal Fuse in L & N)
Recommended Input Fuse			(The need of an external fuse has to be assessed in the final application.)

Output Specifications

Output Voltage Adjustment			±10% (By trim potentiometer)
			Output power must not exceed rated power!
Voltage Set Accuracy			±1% max.
Regulation	- Input Variation (Vmin - Vmax)		0.2% max.
	- Load Variation (0 - 100%)		0.7% max. (3.3 and 5 VDC model)
			0.5% max. (other output models)
Ripple and Noise (20 MHz Bandwidth)		3.3 VDC model:	40 mVp-p typ. (w/ 10 µF X5R)
		5 VDC model:	40 mVp-p typ. (w/ 10 µF X5R)
		9 VDC model:	70 mVp-p typ. (w/ 10 µF X5R)
		12 VDC model:	70 mVp-p typ. (w/ 10 µF X5R)
		15 VDC model:	70 mVp-p typ. (w/ 10 µF X5R)
		24 VDC model:	100 mVp-p typ. (w/ 10 µF X5R)
		36 VDC model:	100 mVp-p typ. (w/ 10 µF X5R)
		48 VDC model:	140 mVp-p typ. (w/ 1 µF X7R)
Capacitive Load		3.3 VDC model:	6'000 µF max.
		5 VDC model:	4'000 µF max.
		9 VDC model:	1'860 µF max.
		12 VDC model:	1'200 µF max.
		15 VDC model:	820 µF max.
		24 VDC model:	470 µF max.
		36 VDC model:	220 µF max.
		48 VDC model:	150 µF max.
Minimum Load			Not required
Temperature Coefficient			±0.02 %/K max.
Hold-up Time	- At 115 VAC		8 ms min.
Start-up Time	- At 230 VAC		850 ms max.
Short Circuit Protection			Continuous, Automatic recovery
Output Current Limitation			120 - 200% of Iout max.
			145% typ. of Iout max.
Overvoltage Protection			115 - 140% of Vout nom.
Transient Response	- Response Deviation		8% max. (75% to 100% Load Step)
	- Response Time		500 µs typ. (75% to 100% Load Step)

All specifications valid at 230 VAC, resistive full load and +25°C after warm-up time, unless otherwise stated.

Downloaded from Arrow.com.

Safety Specifications

Standards	- IT / Multimedia Equipment	EN 62368-1 IEC 62368-1 UL 62368-1
	- Household	EN 60335-1 IEC 60335-1
	- Medical Equipment	EN 60601-1 IEC 60601-1 ANSI/AAMI ES 60601-1 2 x MOPP (Means Of Patient Protection)
	- Power Transformers	IEC 61558-1 IEC 61558-2-16
	- Certification Documents	www.tracopower.com/tpp15a-j-safety-cert/
Protection Class		Class I & II (Prepared): Reinforced Insulation
	See application note:	www.tracopower.com/info/protection-class.pdf
Energy Source	- Output, acc. to 62368-1	ES1
Power Source	- Output, acc. to 62368-1	PS3
Pollution Degree		PD 2
Over Voltage Category		OVC II

EMC Specifications

EMI (Emissions)		EN 60601-1-2 edition 4 (Medical Devices)
	- Conducted Emissions	EN 55011 class A (internal filter) EN 55011 class B (internal filter) EN 55014-1 (internal filter) EN 55032 class A (internal filter) EN 55032 class B (internal filter) FCC 47 Part 15 class A (internal filter) FCC 47 Part 15 class B (internal filter) FCC 47 Part 18 class A (internal filter) FCC 47 Part 18 class B (internal filter)
	- Radiated Emissions	EN 55011 class A (internal filter) EN 55011 class B (internal filter) EN 55014-1 (internal filter) EN 55032 class A (internal filter) EN 55032 class B (internal filter) FCC 47 Part 15 class A (internal filter) FCC 47 Part 15 class B (internal filter) FCC 47 Part 18 class A (internal filter) FCC 47 Part 18 class B (internal filter)
	- Harmonic Current Emissions	EN 61000-3-2, class A
	- Voltage Fluctuations & Flicker	EN 61000-3-3

All specifications valid at 230 VAC, resistive full load and +25°C after warm-up time, unless otherwise stated.

Downloaded from Arrow.com.

EMS (Immunity)			EN 60601-1-2 edition 4 (Medical Devices) EN 55024 (IT Equipment) EN 55035 (Multimedia) EN 55014-2 (Household Appliances Tools)
	- Electrostatic Discharge	Air:	EN 61000-4-2, ±15 kV, perf. criteria A
		Contact:	EN 61000-4-2, ±8 kV, perf. criteria A
	- RF Electromagnetic Field		EN 61000-4-3, 20 V/m, perf. criteria A
	- EFT (Burst) / Surge		EN 61000-4-4, ±2 kV, perf. criteria A
		L to L:	EN 61000-4-5, ±1 kV, perf. criteria A
	- Conducted RF Disturbances		EN 61000-4-6, 20 Vrms, perf. criteria A
	- PF Magnetic Field	Continuous:	EN 61000-4-8, 30 A/m, perf. criteria A
	- Voltage Dips & Interruptions	230 VAC / 50 Hz:	EN 61000-4-11 30%, 25 periods, perf. criteria A 60%, 1 period, perf. criteria A >95%, 1 period, perf. criteria A >95%, 250 periods, perf. criteria A
		115 VAC / 60 Hz:	EN 61000-4-11 30%, 25 periods, perf. criteria A 60%, 1 period, perf. criteria A >95%, 1 period, perf. criteria A >95%, 250 periods, perf. criteria A
EMC / Environmental	- Certification Documents		www.tracopower.com/tpp15a-j-emc-cert/

General Specifications

Relative Humidity			95% max. (non condensing)
Temperature Ranges	- Operating Temperature		−40°C to +85°C
	- Storage Temperature		−40°C to +85°C
Power Derating	- High Temperature		Depending on model
	- Low Input Voltage		4.0 %/V below 90 VAC
		See application note:	www.tracopower.com/tpp15a-j-cc/
Cooling System			Natural convection (20 LFM)
Altitude During Operation			5'000 m max.
Regulator Topology			Flyback Converter
Switching Frequency			90 - 110 kHz (PWM)
Insulation System			Reinforced Insulation
Working Voltage (rated)			250 VAC
Isolation Test Voltage	- Input to Output, 60 s		4'000 VAC
	- Input to Case or PE, 60 s		1'500 VAC
	- Output to Case or PE, 60 s		1'500 VAC
Creepage	- Input to Output		8 mm min.
Clearance	- Input to Output		8 mm min.
Isolation Resistance	- Input to Output, 500 VDC		100 MΩ min.
Leakage Current (at 264 VAC)	- Touch Current		100 µA max.
Reliability	- Calculated MTBF		3'100'000 h (MIL-HDBK-217F, ground benign)
Environment	- Vibration		IEC 60068-2-6
	- Mechanical Shock		IEC 60068-2-27
Housing Type			Open Frame
Mounting Type			Chassis Mount
Connection Type			Pin Connector
Weight			19 g

All specifications valid at 230 VAC, resistive full load and +25°C after warm-up time, unless otherwise stated.

Downloaded from Arrow.com.

Environmental Compliance	- REACH Declaration	www.tracopower.com/info/reach-declaration.pdf REACH SVHC list compliant REACH Annex XVII compliant
	- RoHS Declaration	www.tracopower.com/info/rohs-declaration.pdf Exemptions: 7(a), 7(c)-I (RoHS exemptions refer to the component concentration only, not to the overall concentration in the product (O5A rule).)
	- SCIP Reference Number	d5500e59-00dd-4c77-8513-a5dd131142d8

Additional Information

Supporting Documents	www.tracopower.com/overview/tpp15a-j
Frequently Asked Questions	www.tracopower.com/glossary-faq
Glossary	www.tracopower.com/info/glossary.pdf
Service Portal	www.tracoserviceportal.com

Outline Dimensions

12, 15, 24, 36, and 48 VDC models - without heatsink

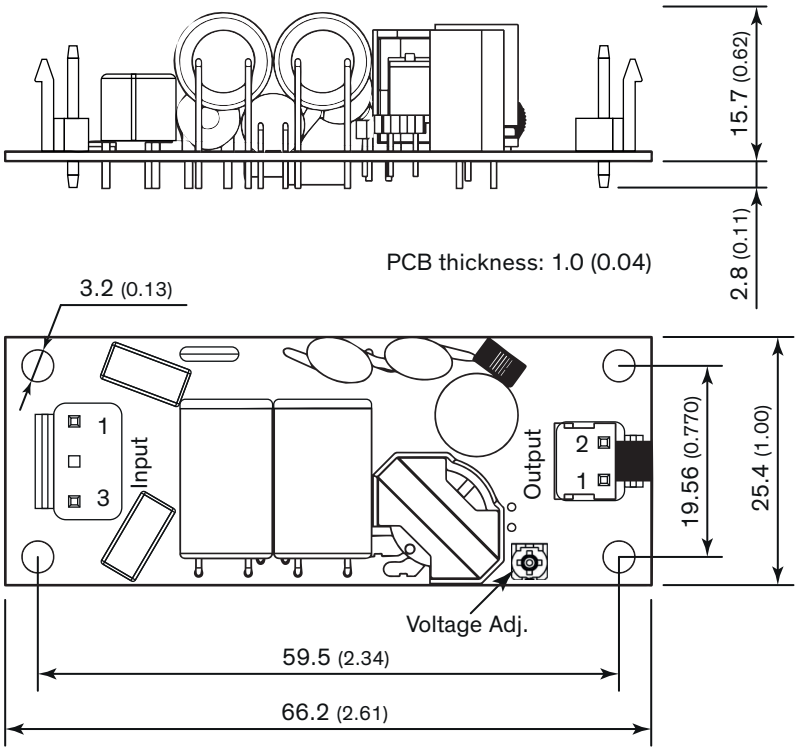

Pin connectors			
Input		Output	
Pin	Function	Pin	Function
1	Line	1	–Vout
3	Neutral	2	+Vout

Input: JST series
mates with JST crimp terminal: SVH-21T-P1.1
and terminal housing: VHR-3N

Output: JST series
mates with JST crimp terminal: SVH-21T-P1.1
and terminal housing: VHR-2N

Dimension in mm (inch)
Tolerances: x.x ±0.5 (x.xx ±0.02)
x.xx ±0.25 (x.xxx ±0.010)

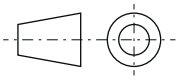

Mounting screw locked torque: max. 0.33 Nm (3.4 kgfcm)

All specifications valid at 230 VAC, resistive full load and +25°C after warm-up time, unless otherwise stated.

Downloaded from Arrow.com.

3.3, 5, and 9 VDC models - with heatsink

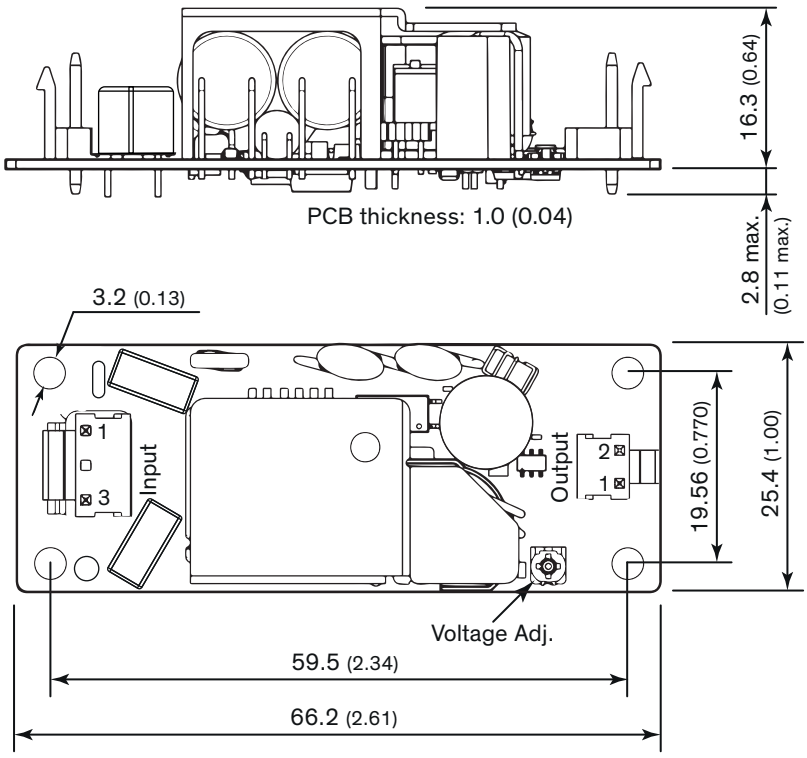

Pin connectors			
Input		Output	
Pin	Function	Pin	Function
1	Line	1	–Vout
3	Neutral	2	+Vout

Input: JST series
mates with JST crimp terminal: SVH-21T-P1.1
and terminal housing: VHR-3N

Output: JST series
mates with JST crimp terminal: SVH-21T-P1.1
and terminal housing: VHR-2N

Dimension in mm (inch)
Tolerances: x.x ±0.5 (x.xx ±0.02)
x.xx ±0.25 (x.xxx ±0.010)

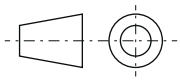

Mounting screw locked torque: max. 0.33 Nm (3.4 kgfcm)

© Copyright 2026 Traco Electronic AG

Downloaded from Arrow.com.