Alle Rechte vorbehalten/ *All rights reserved*

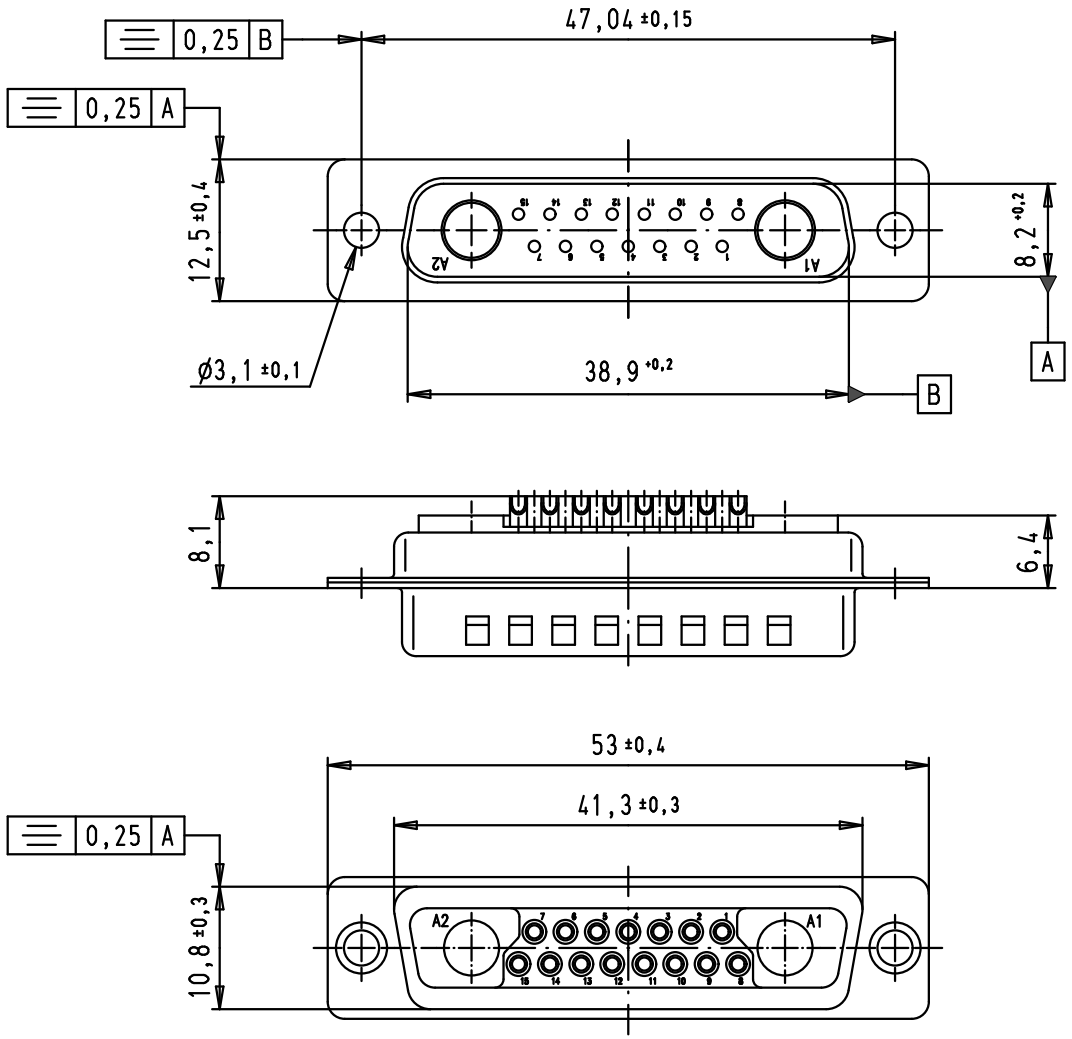

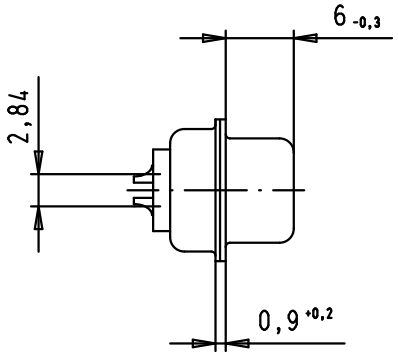

Solder bucket termination for AWG 20

Part number	Performance level
09 69 311 7172	PL3
09 69 311 5172	S4

Mod.	Dat.	Name
34390	26/07/07	PK

	Dat.	Name
Detail.	26/07/07	PK
Insp.		
Stand.		

All Dim. in mm
Orig. Size DIN A 4

HARTING EURL
F-95972 Paris

D-Sub, 17W2, male, straight, solder buckets, tin plated shell with dimples

Maßstab/ *Scale* 1,5:1

TB 09 69 311 x172

Sub.

Blatt/ *Page* 1/1

Downloaded from Arrow.com.