Overview

These electrolytic capacitors contain a radial crown, which allows them to be mounted in a standing position. They feature Ultra-High CV with an outstanding electrical performance and high energy storage capability, a polarized, all-welded design, tinned copper wire leads, and a negative pole connected to the case. The winding is housed in a cylindrical aluminium can with a high purity aluminium lid and a high quality rubber gasket. Low ESR is a result of a low resistive electrolyte/paper system and an all-welded design. Thanks to its mechanical robustness, these capacitors are suitable for use in mobile and aircraft installations, with operation up to +150°C. KEMET automotive grade capacitors meet the demanding Automotive Electronics Council's AEC–Q200 qualification requirements.

Applications

The KEMET PEH227 is a new generation of Ultra-High CV radial crown electrolytic capacitors. It is designed for automotive applications with extremely high demands.

Benefits

- AEC–Q200 automotive qualified
- Up to 2,000 hours at +150°C derated voltage
- Up to 8,000 hours at +125°C
- Ultra-High CV
- Extremely high ripple current
- Up to 27 ARMS ripple current, continuous load
- ESR stability over lifetime
- High vibration resistance
- Polarized all-welded design
- Outstanding electrical performance
- Radial crown that allows mounting in a standing position

Part Number System

PEH227	H	KL	432	0	M	E4
Series	Rated Voltage (VDC)	Size Code	Capacitance Code (µF)	Version	Capacitance Tolerance	Packaging
Radial Crown Aluminum Electrolytic with Soldering Star Termination	H = 25 K = 40 M = 63 N = 80 P = 100	See Dimension Table	The last two digits represent significant figures. The first digit indicates the total number digits.	0 = Standard (without shrink tape)	Q = -10 + 30% M = ±20%	E4 = Tray

Downloaded from Arrow.com.

Performance Characteristics

Item	Performance Characteristics		
Capacitance Range	300 – 10,500 µF		
Rated Voltage	25 – 100 VDC		
Operating Temperature	−40 to +125°C (−40 to +150°C at derated voltage)		
Capacitance Tolerance	−10/+30%, (±20% select values) at 100 Hz/+20°C		
Operational Lifetime	D (mm)	Rated voltage, +125°C (hours)	Derated voltage, +150°C (hours)
	16	6,300	1,500
	18 and 20	8,400	2,000
Shelf Life	5,000 hours at +105°C or 10 years at +40°C 0 VDC		
Leakage Current	I = 0.003 CV + 4.0 (µA)		
	C = rated capacitance (µF), V = rated voltage (VDC). Voltage applied for 5 minutes at +20°C.		
Vibration Test Specifications	Procedure		Requirements
	1.5 mm displacement amplitude or 20 g maximum acceleration. Vibration applied for three 22-hour sessions at 10 – 2,000 Hz (capacitor clamped by body).		No leakage of electrolyte or other visible damage. Deviations in capacitance from initial measurements must not exceed: Δ C/C < 5%
Standards	IEC 60384−4 long life grade 40/125/56, AEC−Q200		

Compensation Factor of Ripple Current (RC) vs. Frequency

Frequency	100 Hz	300 Hz	1 kHz	5 kHz	100 kHz
Coefficient	0.35	0.57	0.80	1.00	1.04

Test Method & Performance

Endurance Life Test	
Conditions	Performance
Temperature	+150°C
Test Duration	1,500 hours (D = 16 mm)
	2,000 hours (D = 18 and 20 mm)
Ripple Current	Maximum ripple current specified in table
Voltage	The sum of DC voltage and the peak AC voltage must not exceed the rated voltage of the capacitor
Performance	**The following specifications will be satisfied when the capacitor is tested at +20°C:**
Capacitance Change	Within 15% of the initial value
Equivalent Series Resistance	≤ 2x initial value (typically ≤ 1.3x at 90% of the lifetime)
Leakage Current	Does not exceed leakage current limit

Downloaded from Arrow.com.

Ordering Options Table

Packaging Kind	Lead Length (mm)	Lead and Packaging Code
Standard Packaging Option		
Tray	3.3 ±0.5	E4

Dimensions – Millimeters

END VIEW (+)

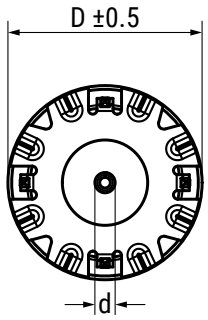

SIDE VIEW

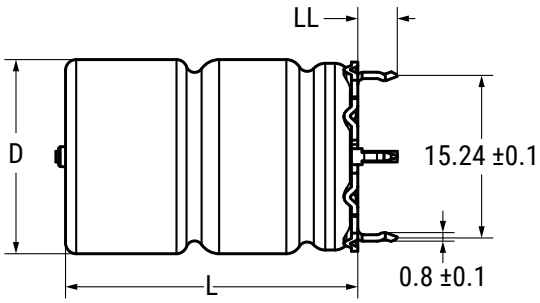

Size Code	Dimensions in mm				Approximate Weight Grams
	D	L	d	LL	
	±0.5	±1	±0.03	±0.5	
KL	16.2	27.7	1.0	3.3	8
KP	16.2	35.7	1.0	3.3	11
LL	18.2	27.7	1.0	3.3	11
LP	18.2	35.7	1.0	3.3	14
LQ	18.2	39.7	1.0	3.3	16
ML	20.2	27.7	1.0	3.3	13
MP	20.2	35.7	1.0	3.3	20
MS	20.2	43.7	1.0	3.3	24

Downloaded from Arrow.com.

Shelf Life

The capacitance, ESR and impedance of a capacitor will not change significantly after extended storage periods, however, the leakage current will very slowly increase. KEMET products are particularly stable and allow a shelf life in excess of ten years at 40°C. See sectional specification under each product for specific data.

Failure Rate

Estimated field failure rate: ≤ 0.15 ppm (failures per year/produced number of capacitors per year)
The expected failure rate for this capacitor range is based on field experience for capacitors with structural similarity.
As Per PEG Equivalents

Environmental Compliance

All Part Numbers in this datasheet are Reach and RoHS compliant and Halogen-Free.

As an environmentally conscious company, KEMET is working continuously with improvements concerning the environmental effects of both our capacitors and their production.

In Europe (RoHS Directive) and in some other geographical areas such as China, legislation has been put in place to prevent the use of some hazardous materials, such as lead (Pb), in electronic equipment. All products in this catalog are produced to help our customers' obligations to guarantee their products and fulfill these legislative requirements. The only material of concern in our products has been lead (Pb), which has been removed from all designs to fulfill the requirement of containing less than 0.1% of lead in any homogeneous material. KEMET will closely follow any changes in legislation worldwide and make any necessary changes in its products, whenever needed.

Some customer segments such as medical, military and automotive electronics may still require the use of lead in electrode coatings. To clarify the situation and distinguish products from each other, a special symbol is used on the packaging labels for RoHS compatible capacitors.

Due to customer requirements, there may appear additional markings such as lead-free (LF), or lead-free wires (LFW) on the label.

Downloaded from Arrow.com.

Table 1A – Ratings & Part Number Reference

Rated Voltage	De-Rated Voltage 150°C	Rated Cap	Size Code	Case Size	Ripple Current					ESR			Part Number
					Maximum			Rated	Maximum (Reduced Voltage)	Maximum			
(VDC)	(VDC)	100 Hz 20°C (µF)		D x L (mm)	≥ 5 kHz 125°C (A)[1]	≥ 5 kHz 140°C (A)[2]	≥ 5 kHz 150°C (A)[2]	≥ 5 kHz 125°C (A)[3]	≥ 5 kHz 125°C (A)[4]	100 Hz 20°C (mΩ)	100 kHz 20°C (mΩ)	5–100 kHz 125–150°C (mΩ)	Represents Part Number Options
25	18	3,200	KL	16 x 27	17.2	10.9	4.9	6.2	7.8	49	32	12.1	PEH227HKL4320ME4
25	18	4,600	KP	16 x 35	19.3	12.2	5.5	7.4	9.3	35	23	9.6	PEH227HKP4460ME4
25	18	4,300	LL	18 x 27	19.4	12.3	5.5	7	8.9	37	24	10.4	PEH227HLL4430QE4
25	18	6,200	LP	18 x 35	21.6	13.6	6.1	8.3	10.5	27	18	8.4	PEH227HLP4620QE4
25	18	7,100	LQ	18 x 39	22.2	14.1	6.3	8.8	11.1	24	16	7.9	PEH227HLQ4710QE4
25	18	5,600	ML	20 x 27	23.1	14.6	6.5	7.6	9.6	30	20	9.8	PEH227HML4560QE4
25	18	8,100	MP	20 x 35	25.7	16.2	7.3	9	11.4	22	15	7.9	PEH227HMP4810QE4
25	18	10,500	MS	20 x 43	27.1	17.1	7.7	9.9	12.5	18	13	7.1	PEH227HMS5100QE4
40	32	1,500	KL	16 x 27	16.8	10.6	4.8	6	7.6	67	32	12.6	PEH227KKL4150ME4
40	32	2,200	KP	16 x 35	19	12	5.4	7.2	9.1	47	23	9.9	PEH227KKP4220ME4
40	32	2,100	LL	18 x 27	19	12	5.4	6.9	8.7	49	24	10.8	PEH227KLL4210QE4
40	32	3,000	LP	18 x 35	21.2	13.4	6	8.2	10.4	35	18	8.7	PEH227KLP4300QE4
40	32	3,500	LQ	18 x 39	22	13.9	6.2	8.7	11	31	16	8.1	PEH227KLQ4350QE4
40	32	2,700	ML	20 x 27	22.7	14.4	6.4	7.4	9.4	40	20	10.1	PEH227KML4270QE4
40	32	4,200	MP	20 x 35	25.5	16.1	7.2	9	11.4	27	14	8	PEH227KMP4420QE4
40	32	5,200	MS	20 x 43	26.7	16.9	7.6	9.8	12.4	23	13	7.3	PEH227KMS4520QE4
63	54	780	KL	16 x 27	12.9	8.2	3.7	4.6	5.9	107	45	21.3	PEH227MKL3780QE4
63	54	1,100	KP	16 x 35	14.9	9.4	4.2	5.7	7.2	76	32	16	PEH227MKP4110QE4
63	54	1,100	LL	18 x 27	15.2	9.6	4.3	5.5	6.9	77	33	16.9	PEH227MLL4110QE4
63	54	1,600	LP	18 x 35	17.3	11	4.9	6.7	8.5	55	24	13	PEH227MLP4160QE4
63	54	1,900	LQ	18 x 39	18.2	11.5	5.1	7.2	9.1	47	21	11.8	PEH227MLQ4190QE4
63	54	1,500	ML	20 x 27	18.8	11.9	5.3	6.1	7.8	60	27	14.8	PEH227MML4150QE4
63	54	2,100	MP	20 x 35	21.3	13.5	6	7.5	9.5	43	20	11.5	PEH227MMP4210QE4
63	54	2,800	MS	20 x 43	23.4	14.8	6.6	8.5	10.7	34	16	9.8	PEH227MMS4280QE4
80	63	520	KL	16 x 27	12.2	7.7	3.5	4.5	5.6	150	62	24.0	PEH227NKL3520QE4
80	63	750	KP	16 x 35	14.1	8.9	4.0	5.5	6.8	105	44	17.9	PEH227NKP3750QE4
80	63	750	LL	18 x 27	14.5	9.1	4.1	5.5	6.8	106	45	18.7	PEH227NLL3750QE4
80	63	1,100	LP	18 x 35	16.6	10.5	4.7	6.6	8.2	74	32	14.2	PEH227NLP4110QE4
80	63	1,200	LQ	18 x 39	17.4	11.0	4.9	7.0	8.7	67	28	12.9	PEH227NLQ4120QE4
80	63	990	ML	20 x 27	17.9	11.3	5.1	6.2	7.7	82	36	16.2	PEH227NML3990QE4
80	63	1,400	MP	20 x 35	20.4	12.9	5.8	7.5	9.3	59	26	12.5	PEH227NMP4140QE4
80	63	1,800	MS	20 x 43	22.2	14.0	6.3	8.3	10.3	46	21	10.6	PEH227NMS4180QE4
100	83	300	KL	16 x 27	10.9	6.9	3.1	3.8	4.8	257	118	29.6	PEH227PKL3300QE4
100	83	430	KP	16 x 35	12.7	8.1	3.6	4.8	6.1	180	83	21.7	PEH227PKP3430QE4
100	83	430	LL	18 x 27	13.1	8.3	3.7	4.6	5.8	181	84	22.5	PEH227PLL3430QE4
100	83	620	LP	18 x 35	15.2	9.6	4.3	5.7	7.2	126	59	16.8	PEH227PLP3620QE4
100	83	720	LQ	18 x 39	15.9	10.2	4.5	6.0	7.6	110	52	15.1	PEH227PLQ3720QE4
100	83	560	ML	20 x 27	16.4	10.4	4.7	5.3	6.7	140	66	19.1	PEH227PML3560QE4
100	83	820	MP	20 x 35	18.9	12.0	5.4	6.5	8.3	98	47	14.4	PEH227PMP3820QE4
100	83	1000	MS	20 x 43	20.5	13.1	5.8	7.5	9.4	78	37	12.2	PEH227PMS4100QE4
Rated Voltage	De-Rated Voltage 150°C	Rated Capacitance	Size Code	Case Size	Ripple Current					ESR			Part Number

[1] Capacitor-mounted with low thermal resistance path (heat-sink).
[2] Valid for capacitor supplied with reduced DC voltage, capacitor-mounted with low thermal resistance path.
[3] Continuous operation at Natural Convection (D20 & D18, 4,000h; D16, 3000h)
[4] Valid for capacitor supplied with reduced DC voltage. Continuous operation at Natural Convection. Reduced life (D20 & D18, 2000h; D16, 1500h)

Downloaded from Arrow.com.

Marking

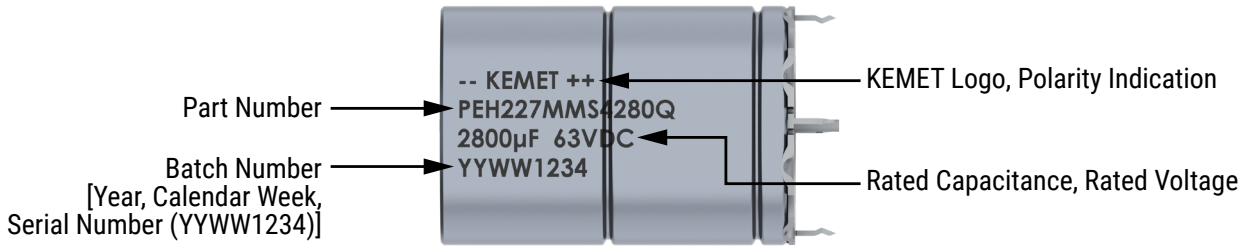

Construction

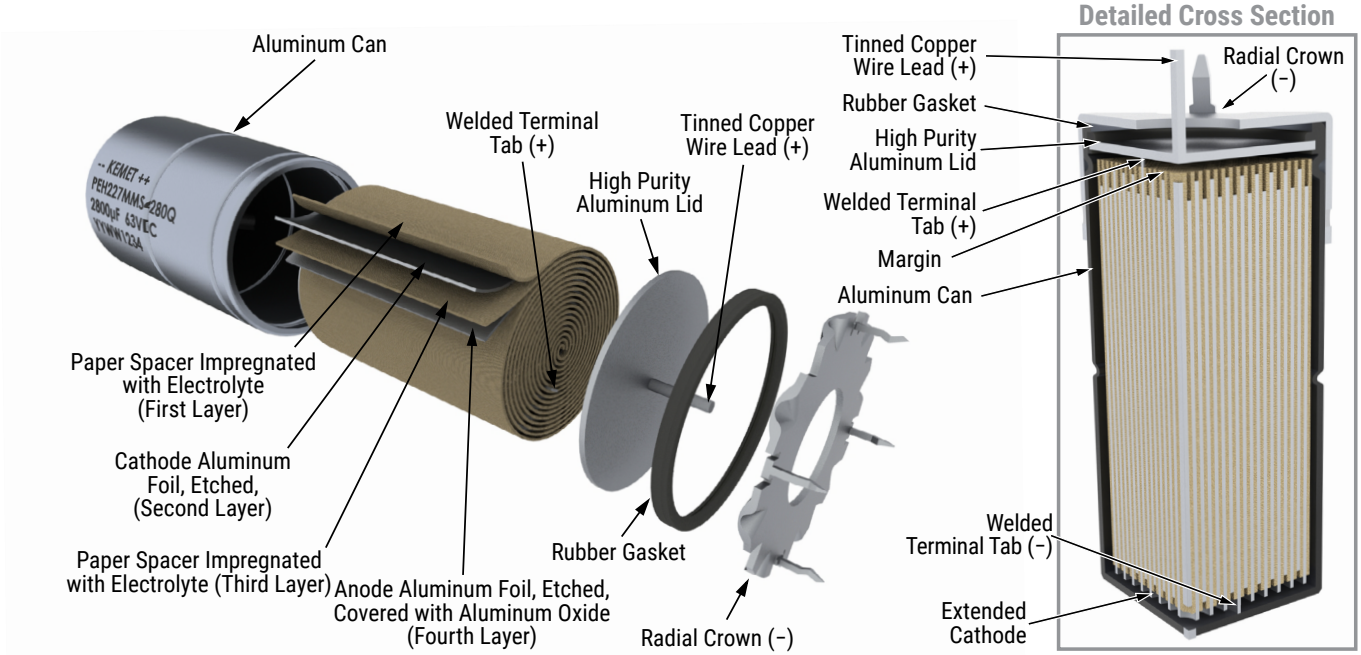

Downloaded from Arrow.com.

Construction Data

The manufacturing process begins with the anode foil being electrochemically etched to increase the surface area and then "formed" to produce the aluminum oxide layer. Both the anode and cathode foils are then interleaved with absorbent paper and wound into a cylinder. During the winding process, aluminum tabs are attached to each foil to provide the electrical contact.

The winding is assembled to the capacitor Al-can and to the Al-lid. The can is filled with electrolyte and the winding is impregnated during a vacuum treatment. The capacitor is sealed. Throughout the process, all materials inside the housing must be maintained at the highest purity and be compatible with the electrolyte.

Each capacitor is aged and tested before being packed. The purpose of aging is to repair any damage in the oxide layer and thus reduce the leakage current to a very low level. Aging is carried out at elevated temperature and is accomplished by applying voltage to the device while carefully controlling the supply current. The process takes between 2 and 20 hours, depending on voltage rating.

Damage to the oxide layer can occur due to a variety of reasons:

- Slitting of the anode foil after forming
- Attaching the tabs to the anode foil
- Minor mechanical damage caused during winding

The following tests are applied for each individual capacitor.

Electrical:

- Leakage current
- Capacitance
- ESR
- Tan Delta

Mechanical/Visual:

- Pull strength test of wire terminals
- Print detail
- Box labels
- Packaging, including packed quantity

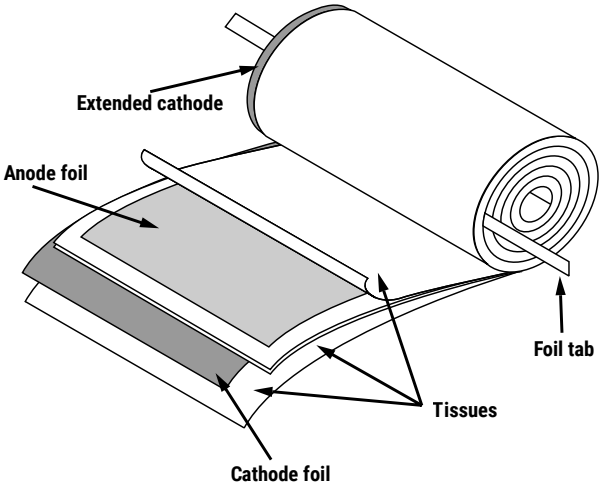

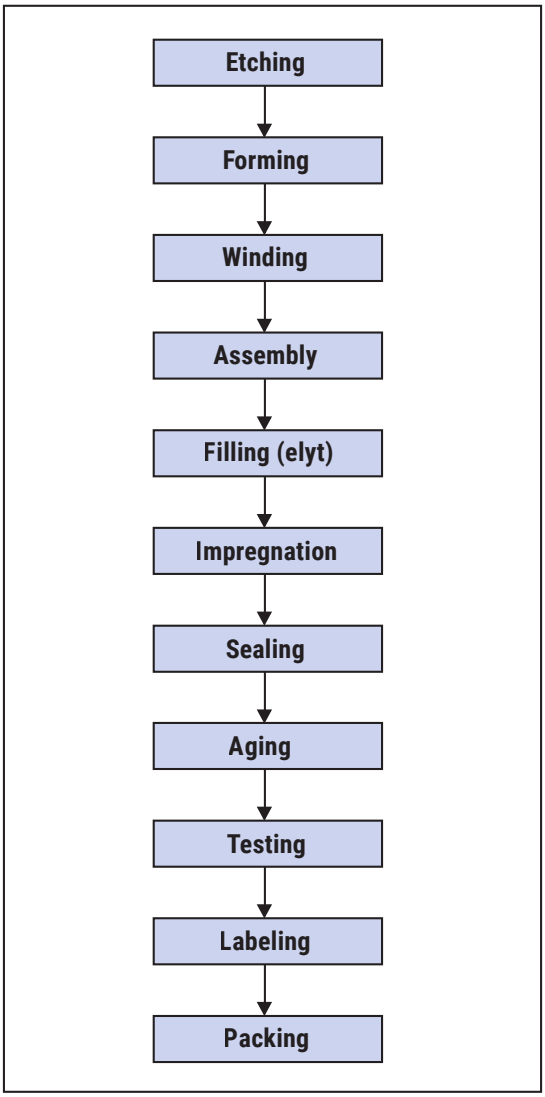

Downloaded from Arrow.com.

KEMET Electronics Corporation Sales Offices

For a complete list of our global sales offices, please visit https://www.yageogroup.com/SalesResources/SalesOffices

Disclaimer

YAGEO Corporation and its affiliates do not recommend the use of commercial or automotive grade products for high reliability applications or manned space flight.

All product specifications, statements, information and data (collectively, the "Information") in this datasheet are subject to change. The customer is responsible for checking and verifying the extent to which the Information contained in this publication is applicable to an order at the time the order is placed. All Information given herein is believed to be accurate and reliable, but it is presented without guarantee, warranty, or responsibility of any kind, expressed or implied.

Statements of suitability for certain applications are based on KEMET Electronics Corporation's ("KEMET") knowledge of typical operating conditions for such applications, but are not intended to constitute – and KEMET specifically disclaims – any warranty concerning suitability for a specific customer application or use. The Information is intended for use only by customers who have the requisite experience and capability to determine the correct products for their application. Any technical advice inferred from this Information or otherwise provided by KEMET with reference to the use of KEMET's products is given gratis, and KEMET assumes no obligation or liability for the advice given or results obtained.

Although KEMET designs and manufactures its products to the most stringent quality and safety standards, given the current state of the art, isolated component failures may still occur. Accordingly, customer applications which require a high degree of reliability or safety should employ suitable designs or other safeguards (such as installation of protective circuitry or redundancies) in order to ensure that the failure of an electrical component does not result in a risk of personal injury or property damage.

Although all product–related warnings, cautions and notes must be observed, the customer should not assume that all safety measures are indicated or that other measures may not be required.

KEMET requires its products to be packaged and shipped on pallets. This is because KEMET's products are specifically designed to be packed onto pallets during shipment. If for any reason, the products are removed from pallets by the shipping party and shipped to the end customer, then additional external protection is required. In this instance, an external box with two carton layers and an upwards orientation sticker must be used by the shipping party, with the empty space filled with filling material, and afterwards sealing the box. If this packing and packaging guideline is not followed by the shipping party, the shipping party, and not KEMET, will be held responsible for any packaging, packing and/or product damages upon delivery of the products to the end customer. KEMET hereby disclaims any liability for damages to the products or otherwise that have been, or threaten to be, inflicted, result from or are in any way related to the packaging, packing or damage by the shipping party in contravention of the packing and packaging guidelines herein.

KEMET is a registered trademark of KEMET Electronics Corporation.

Downloaded from Arrow.com.