REVISIONS					
REV	ECO	DESCRIPTION	DATE	BY	APPR
01	–	CUSTOMER DRAWING	–	–	–
02	–	CHANGED VOLTAGE FROM 250V TO 500V	17JAN22	MRF	DR

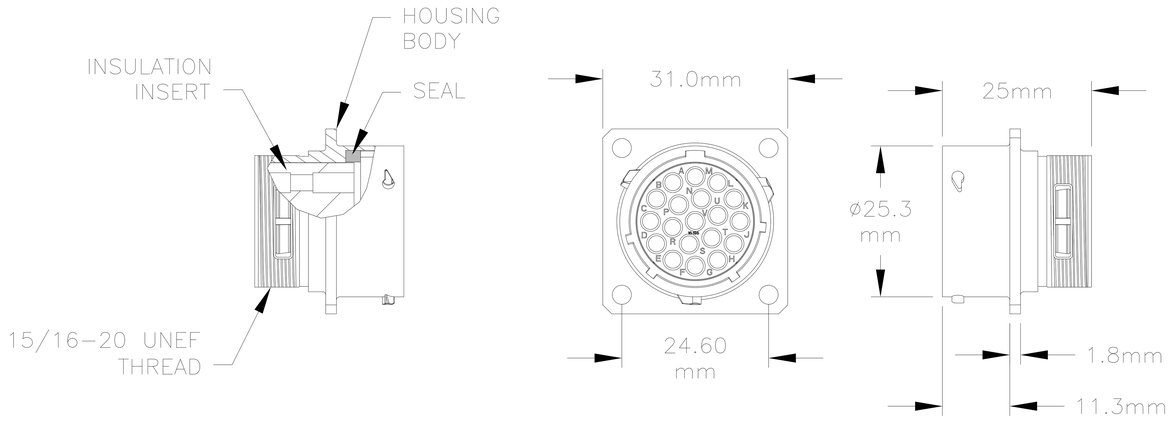

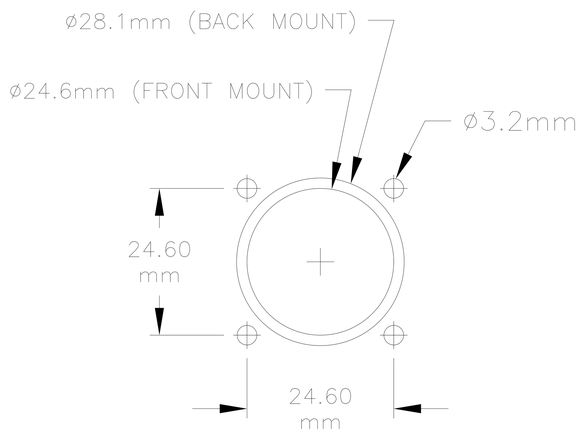

PANEL CUTOUT

ILLUSTRATION: COMPLETE KIT

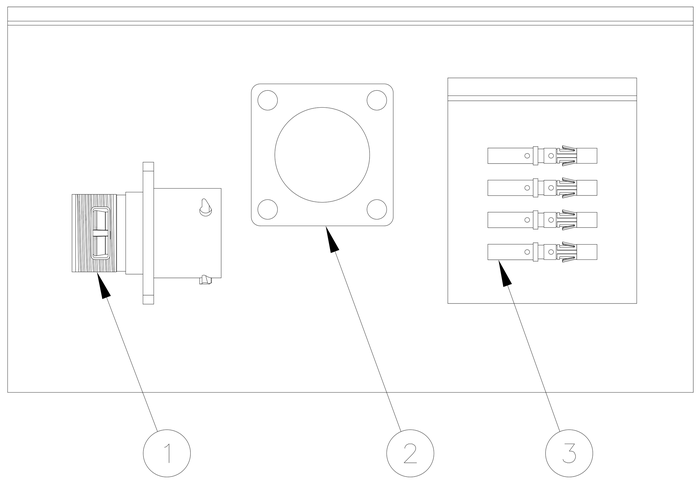

NOTES:

1) CONTACT BARREL RANGE: 16AWG TO 18AWG
2) RECOMMENDED CRIMP TOOLS:
   HAND CRIMPER: MFX–3959
   PNEUMATIC CRIMPER: MFX–3960
3) EXTRACTION TOOL: QXRT16
4) MATERIALS:
   HOUSING BODY: ZINC DIE CAST, NICKEL PLATED
   INSULATION INSERT: PA66, UL94/V–0
   CONTACT: BRASS, GOLD FLASH PLATED
   SEAL: NBR (NITRILE BUTADIENE RUBBER)
5) ELECTRICAL DATA:
   a) CURRENT (MAX): 13A
   b) VOLTAGE (MAX): 500V AC/DC
   c) INSULATION RESISTANCE (MIN): 5000M OHMS
   d) TEST VOLTAGE (BETWEEN CONTACTS): 3050V
6) TECHNICAL DATA:
   a) TEMPERATURE RANGE: –40°C TO 105°C
   b) PROTECTION: IP67 (MATED CONDITION)
   c) MATING CYCLES: >500
   d) VIBRATION RESISTANCE PER MIL–STD–202 METHOD 204
   e) THERMAL SHOCK PER MIL–STD–202 METHOD 207
   f) 48 HOUR SALT SPRAY PER MIL–STD–202 METHOD 101
7) RoHS COMPLIANT

QUANTITY	PART NUMBER	DESCRIPTION	ITEM
19	MS16M23F	CONTACT, SOCKET, SIZE 16	3
1	RTFD16B	GASKET	2
1	RT001619SNH	CONNECTOR	1

MATERIALS LIST

UNLESS OTHERWISE SPECIFIED
1) All dimensions are in metric(mm).
2) Tolerances are as follows:
1 PL DEC ±0.30 | Fractions ±1/64
2 PL DEC ±0.15 | Angles ±1°
3 PL DEC ±0.08
3) Note reference = X

MATERIAL SPECIFICATIONS:

PROCESS SPECIFICATIONS:

NEXT ASS'Y:

SIGNATURES		DATE
DRAWN:	MRF	10SEP13
CHECKED:		
ENGINEER:		
APPROVAL:		
CUSTOMER:		

THIS DRAWING IS SUPPLIED FOR INFORMATION ONLY. DESIGN FEATURES, SPECIFICATIONS AND PERFORMANCE DATA SHOWN HEREON ARE THE PROPERTY OF THE AMPHENOL CORPORATION. NO RIGHTS OF REPRODUCTION ARE IMPLIED. ALL DIMENSIONS ARE SUBJECT TO NORMAL MANUFACTURING VARIATIONS.

Amphenol

Sine Systems - www.amphenol-sine.com
44724 Morley Drive
Clinton Township, MI 48036

KIT, ECO-MATE

SIZE	TYPE	DWG NO:	REVISION
B	C-	RT001619SNH-K	02

SCALE: NONE SHEET 1 OF 1

TITLE: KIT, ECO-MATE
DWG NO:
REV: 02
SH: 1
OF: 1

ecomate® RM/RSSM/Aquarius™ - Contact Size 16 Options

Machined, Crimp Contacts				
Part Number		Contact Size (AWG)	Wire Range (mm²)	Plating
Male	Female			
MP14M23F	MS14M23F	14AWG	2.0-2.5mm²	Gold Flash
MP14M23G5	MS14M23G5	14AWG	2.0-2.5mm²	Gold 5µ"
MP14M23G10	MS14M23G10	14AWG	2.0-2.5mm²	Gold 10µ"
MP14M23G15	MS14M23G15	14AWG	2.0-2.5mm²	Gold 15µ"
MP14M23G30	MS14M23G30	14AWG	2.0-2.5mm²	Gold 30µ"
MP16M23F	MS16M23F	18-16AWG	0.75-1.5mm²	Gold Flash
MP16M23G5	MS16M23G5	18-16AWG	0.75-1.5mm²	Gold 5µ"
MP16M23G10	MS16M23G10	18-16AWG	0.75-1.5mm²	Gold 10µ"
MP16M23G15	MS16M23G15	18-16AWG	0.75-1.5mm²	Gold 15µ"
MP16M23G30	MS16M23G30	18-16AWG	0.75-1.5mm²	Gold 30µ"
MP20M23F	MS20M23F	22-20AWG	0.34-0.50mm²	Gold Flash
MP20M23G5	MS20M23G5	22-20AWG	0.34-0.50mm²	Gold 5µ"
MP20M23G10	MS20M23G10	22-20AWG	0.34-0.50mm²	Gold 10µ"
MP20M23G15	MS20M23G15	22-20AWG	0.34-0.50mm²	Gold 15µ"
MP20M23G30	MS20M23G30	22-20AWG	0.34-0.50mm²	Gold 30µ"
MP24M23F	MS24M23F	26-24AWG	0.14-0.25mm²	Gold Flash
MP24M23G5	MS24M23G5	26-24AWG	0.14-0.25mm²	Gold 5µ"
MP24M23G10	MS24M23G10	26-24AWG	0.14-0.25mm²	Gold 10µ"
MP24M23G15	MS24M23G15	26-24AWG	0.14-0.25mm²	Gold 15µ"
MP24M23G30	MS24M23G30	26-24AWG	0.14-.025mm²	Gold 30µ"

Stamped & Formed , Crimp Contacts				
Part Number		Contact Size (AWG)	Wire Range (mm²)	Plating
Male	Female			
SP14M2F	SS14M2F	14AWG	2.0-2.5mm²	Gold Flash
SP14M2G5	SS14M2G5	14AWG	2.0-2.5mm²	Gold 5µ"
SP14M2G10	SS14M2G10	14AWG	2.0-2.5mm²	Gold 10µ"
SP14M2G15	SS14M2G15	14AWG	2.0-2.5mm²	Gold 15µ"
SP14M2G30	SS14M2G30	14AWG	2.0-2.5mm²	Gold 30µ"
SP16M2F	SS16M2F	18-16AWG	0.75-1.5mm²	Gold Flash
SP16M2G5	SS16M2G5	18-16AWG	0.75-1.5mm²	Gold 5µ"
SP16M2G10	SS16M2G10	18-16AWG	0.75-1.5mm²	Gold 10µ"
SP16M2G15	SS16M2G15	18-16AWG	0.75-1.5mm²	Gold 15µ"
SP16M2G30	SS16M2G30	18-16AWG	0.75-1.5mm²	Gold 30µ"
SP20M2F	SS20M2F	22-20AWG	0.34-0.50mm²	Gold Flash
SP20M2G5	SS20M2G5	22-20AWG	0.34-0.50mm²	Gold 5µ"
SP20M2G10	SS20M2G10	22-20AWG	0.34-0.50mm²	Gold 10µ"
SP20M2G15	SS20M2G15	22-20AWG	0.34-0.50mm²	Gold 15µ"
SP20M2G30	SS20M2G30	22-20AWG	0.34-0.50mm²	Gold 30µ"
SP24M2F	SS24M2F	26-24AWG	0.14-0.25mm²	Gold Flash
SP24M2G5	SS24M2G5	26-24AWG	0.14-0.25mm²	Gold 5µ"
SP24M2G10	SS24M2G10	26-24AWG	0.14-0.25mm²	Gold 10µ"
SP24M2G15	SS24M2G15	26-24AWG	0.14-0.25mm²	Gold 15µ"
SP24M2G30	SS24M2G30	26-24AWG	0.14-.025mm²	Gold 30µ"

Machined, Tooling	
Part Number	Description
QXRT16	Contact Extraction Tool, #16 (Ø 1.6) Contact
MFX-3959	Hand Crimp Tool for Machined Contacts
MFX-3960	Pneumatic Crimp Tool for Machined Contact

Stamped & Formed, Tooling	
Part Number	Description
QXRT16	Contact Extraction Tool, #16 (Ø 1.6) Contact
MFX-3954	Hand Tool, Stamped & Formed Contact, Size 16, 20-14AWG
MFX-3957	Crimp Die, Stamped & Formed Contact

Plating Options, All	
Symbol	Plating
T	Tin Plated (for Stamped & Formed Contacts)
S	Silver Plated 5Um (for Machined Contacts)
F	Gold Plated
G5	Gold Plated (Thickness 5µ")
G10	Gold Plated (Thickness 10µ")
G15	Gold Plated (Thickness 15µ")
G30	Gold Plated (Thickness 30µ")

Misc Tooling, All	
Part Number	Description
CA-4020-59	Sealing Plug, Size 16 & 20

Standard Quantity Order Options	
Machined	Bulk Package, 500 Pieces
Stamped & Formed	Reel, 3000 Pieces

Downloaded from Arrow.com.

ecomate® RM/RSSM - Contact Size 16, PC Tail Options

Machined, PC Tail Contacts				
Part Number		Contact Size (AWG)	Description	Plating
Male	Female			
MP16M12E06F	MS16M12E06F	16AWG	Short Version	Gold Flash
MP16M12E06G5	MS16M12E06G5	16AWG	Short Version	Gold 5µ"
MP16M12E06G10	MS16M12E06G10	16AWG	Short Version	Gold 10µ"
MP16M12E06G15	MS16M12E06G15	16AWG	Short Version	Gold 15µ"
MP16M12E06G30	MS16M12E06G30	16AWG	Short Version	Gold 30µ"
MP16M12E09F	MS16M12E09F	16AWG	Long Version	Gold Flash
MP16M12E09G5	MS16M12E09G5	16AWG	Long Version	Gold 5µ"
MP16M12E09G10	MS16M12E09G10	16AWG	Long Version	Gold 10µ"
MP16M12E09G15	MS16M12E09G15	16AWG	Long Version	Gold 15µ"
MP16M12E09G30	MS16M12E09G30	16AWG	Long Version	Gold 30µ"

Stamped & Formed , PC Tail Contacts				
Part Number		Contact Size (AWG)	Description	Plating
Male	Female			
-	-	-	-	-
-	-	-	-	-
-	-	-	-	-
-	-	-	-	-
-	-	-	-	-
-	-	-	-	-
-	-	-	-	-
-	-	-	-	-
-	-	-	-	-
-	-	-	-	-

PCB Contact Dimensions - Nominal Length G (Size 20 PC Tail dimensions for ecomate® RM and ecomate® RSSM connectors only.)						
Pin Contact						
Shell Size	MP20W12E06xx	MP20W12E09xx	MP16M12E04xx	MP16M12E06xx	MP10B12E05xx	MP10B12E08xx
10	4.0mm	9.5mm	4.0mm	8.0mm	-	-
12	4.0mm	9.5mm	4.0mm	8.0mm	5.0mm	-
14	4.0mm	9.5mm	4.0mm	8.0mm	5.2mm	-
16	4.0mm	9.5mm	4.0mm	8.0mm	-	-
18	-	9.5mm	4.0mm	8.0mm	-	-
20	-	9.5mm	4.0mm	8.0mm	-	-
24	-	-	-	3.9mm	-	-

Socket Contact						
Shell Size	MP20W12E06xx	MP20W12E09xx	MP16M12E04xx	MP16M12E06xx	MP10B12E05xx	MP10B12E08xx
10	3.3mm	8.5mm	2.4mm	3.0mm	-	-
12	3.3mm	8.5mm	2.4mm	3.0mm	-	-
14	3.3mm	8.5mm	2.4mm	3.0mm	-	-
16	3.3mm	8.5mm	2.4mm	3.0mm	-	-
18	--	8.5mm	2.4mm	-	-	-
20	--	8.5mm	2.4mm	-	-	-
24	-	-	-	-	-	-

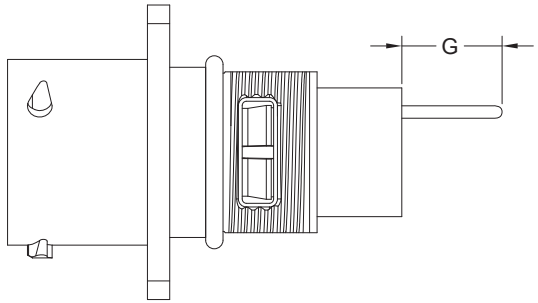

Standard Quantity Order Options	
Machined	Bulk, 500 Pieces
Stamped & Formed	-

NOTE: For ecomate® Aquarius™ PC Tail options, see our **ecomate® Aquarius™ PCB Mount Jam Nut Receptacles Flyer** online at www.amphenol-sine.com.

Downloaded from Arrow.com.