© 2020TE Connectivity. All Rights Reserved.

REVISIONS					
P	LTR	DESCRIPTION	DATE	DWN	APVD
	B	INITIAL RELEASE	07JUL2020	SB	LI

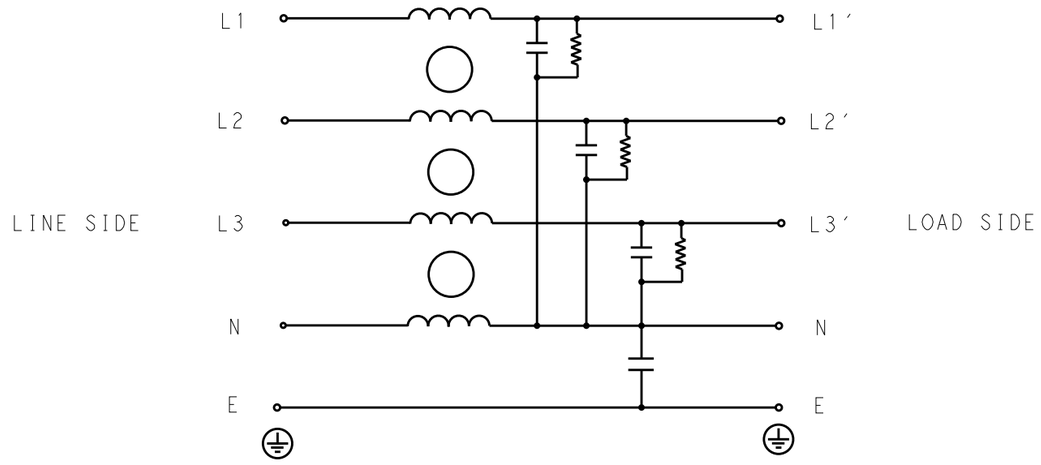

SCHEMATIC

TYPICAL INSERTION LOSS
COMMON MODE 50/50Ω; DIFFERENTIAL MODE 50/50Ω

MHz	0.01	0.05	0.15	0.5	1	3	5	10	30
CM	3	4	15	25	29	32	30	35	29
DM	4	5	17	26	30	31	32	36	40

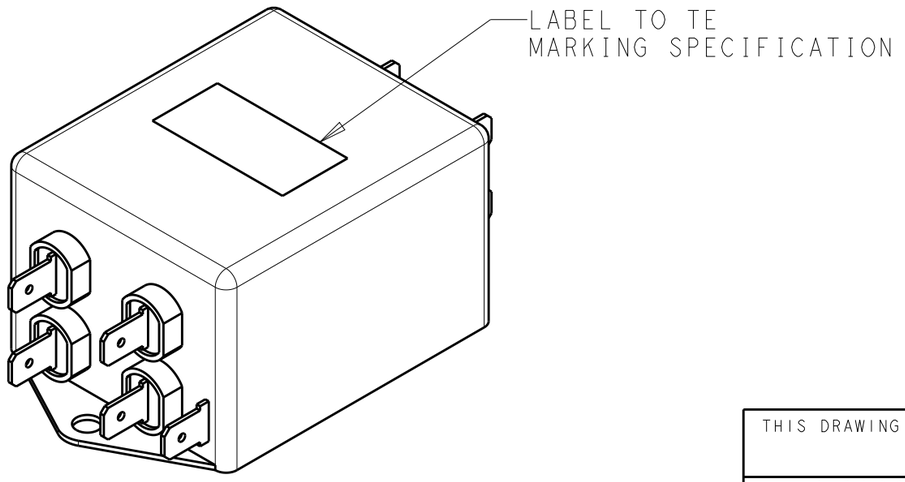

SAFETY ORGANIZATIONS
THIS FILTER WILL BE FORMALLY RECOGNIZED, CERTIFIED OR APPROVED BY THE LISTED AGENCY. THEREFORE, ALL TEST/REQURIEMENTS SPECIFIED IN THE LATEST REVISION OF THE FOLLOWING AGENCY STANDARDS WILL BE MET:

UL RECOGNIZED*	10A 520V 50Hz/60Hz 40°C
CSA CERTIFIED**	10A 520V 50Hz/60Hz 40°C

*31 JULY 2020 ; **31 AUGUST 2020

OPERATING SPECIFICATION
LINE CURRENT/VOLTAGE: 10A, 520VAC
LINE FREQUENCY: 50/60Hz

MAXIMUM LEAKAGE CURRENT: 3mA @ 230VAC, 50Hz

OPERATING AMBIENT TEMPERATURE RANGE @ RATED CURRENT: -25°C TO +40°C

IN AN AMBIENT, Ta, HIGHER THAN 40°C, THE MAXIMUM OPERATING CURRENT, Io, IS AS FOLLOWS:

$$Io = Ir\sqrt{\frac{85-Ta}{45}}$$

RELIABILITY SPECIFICATIONS
STORAGE TEMPERATURE: -40°C TO +85°C
HUMIDITY: 21 DAYS @ 40°C AND 95% RH

TEST SPECIFICATIONS
INDUCTANCE, NOMINAL: 0.5mH

CAPACITANCE @ 1kHz
LINE TO GROUND, NOMINAL: 22nF
LINE TO NEUTRAL, NOMINAL: 100nF

DISCHARGE RESISTOR
L/G I.R. 2MΩ 1W
L/L I.R. 2MΩ 1W
L/N I.R. 1MΩ 1W
N/G I.R. 680KΩ 1W
IR (NO DISCHARGE RESISTOR) 20°C, 50% RH AND 100VDC, MIN: 6MΩ

RECOMMENDED RECEIVING INSPECITON HIPOT
LINE TO GROUND FOR 1 MINUTE: 2856VDC
LINE TO LINE FOR 1 MINUTE: 2236VDC
LINE TO NEUTRAL FOR 1 MINUTE: 1290VDC

FILTER APPROVAL
THE BEST WAY TO SELECT AND QUALIFY A FILTER IS FOR YOUR ENGINEERING TO TEST THE UNIT IN YOUR EQUIPMENT.

THIS DRAWING IS A CONTROLLED DOCUMENT.

DIMENSIONS: mm

TOLERANCES UNLESS OTHERWISE SPECIFIED:

0 PLC	±-
1 PLC	±0.5
2 PLC	±0.40
3 PLC	±0.130
4 PLC	±0.0500
ANGLES	±-

MATERIAL: - / -
FINISH: - / -

DWN	SHRICHARANA B	19FEB2020
CHK	LEO IRUDHAYARAJ	19FEB2020
APVD	LEO IRUDHAYARAJ	19FEB2020
PRODUCT SPEC	-	
APPLICATION SPEC	-	
WEIGHT	-	

TE Connectivity

NAME: POWER LINE FILTER 10KESS1BFPW

SIZE	CAGE CODE	DRAWING NO	RESTRICTED TO
A3	00779	C-4-1609966-3	-

CUSTOMER DRAWING

SCALE	SHEET	REV
1:1	1 OF 2	B

Downloaded from Arrow.com.

© 2020TE Connectivity. All Rights Reserved.

REVISIONS					
P	LTR	DESCRIPTION	DATE	DWN	APVD
		SEE SHEET 1			

NOTE 1 GROUND CONNECTION:
DO NOT LOOSEN INNER GROUND NUTS.
TORQUE OUTER TERMINAL /GROUND NUTS: XXX

NOTE 2 INPUT OUTPUT CONNECTION TERMINAL
AWG SIZE: XXX

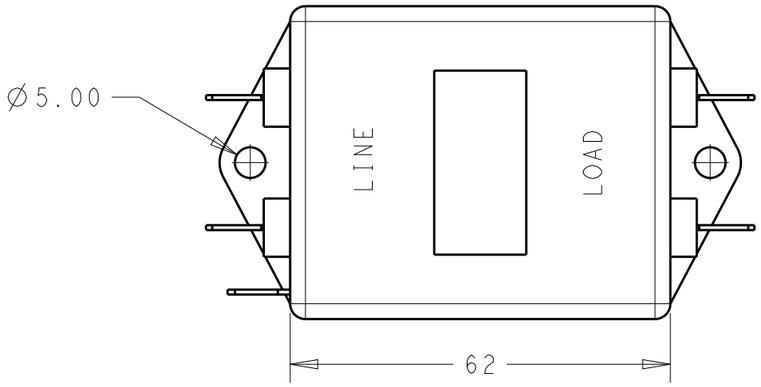

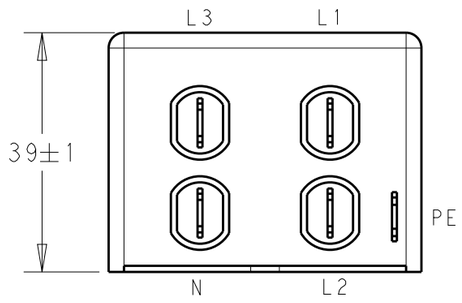

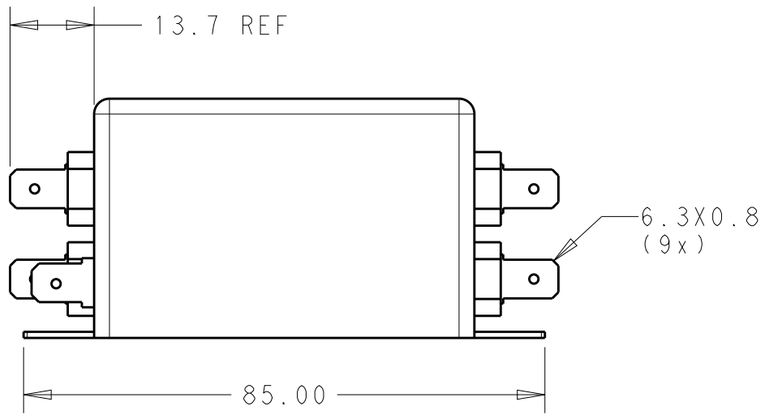

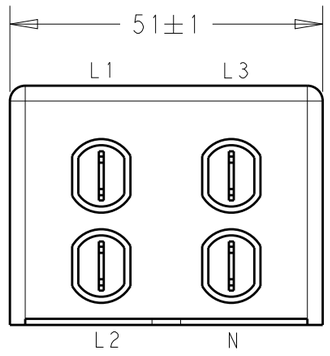

THIS DRAWING IS A CONTROLLED DOCUMENT.

DIMENSIONS: mm

TOLERANCES UNLESS OTHERWISE SPECIFIED:

0 PLC	±-
1 PLC	±0.5
2 PLC	±0.40
3 PLC	±0.130
4 PLC	±0.0500
ANGLES	±-

MATERIAL: - / -

FINISH: - / -

DWN 19FEB2020 SHRICHARANA B
CHK 19FEB2020 LEO IRUDHAYARAJ
APVD 19FEB2020 LEO IRUDHAYARAJ
PRODUCT SPEC -
APPLICATION SPEC -
WEIGHT -

TE Connectivity

NAME
POWER LINE FILTER
10KESS1BFPW

SIZE	CAGE CODE	DRAWING NO	RESTRICTED TO
A3	00779	C-4-1609966-3	-

CUSTOMER DRAWING

SCALE 1:1 SHEET 2 OF 2 REV B

1470-19 (3/13)

Downloaded from Arrow.com.