LED Drivers for LCD Backlights

1ch Buck Type (Quasi-Resonant Control) White LED Driver for Large LCD Included 250V MOSFET

BM531Q11

1.1 General Description

BM531Q11 is a high efficiency driver for white LEDs and designed for large LCDs. BM531Q11 is built-in a quasi-resonant control method DCDC converter that employ an array of LEDs as the light source. BM531Q11 is built-in 250V MOSFET and owing to the external current setting resistance, a power supply design with a high degree of freedom can be achieved.

Key Specifications

- Operating power supply voltage range:
  VCC: 9.0V to 35.0V
  DRAIN: to 250V
- Operating current: 700μA(typ.)
- Maximum frequency: 400kHz(typ.)
- Operating temperature range: - 40°C to +105°C

Features

- Quasi-resonant switching mode
- Built-in 250V MOSFET
- Maximum frequency 400kHz
- VCC pin: under voltage protection
- SOURCE pin: Leading-Edge-Blanking function
- PWM and ADIM dimming operating
- FAIL signal output (ADIM pin)

1.2 Package

DIP7AK

W(Typ) x D(Typ) x H(Max)
9.20mm×6.35mm×4.30mm

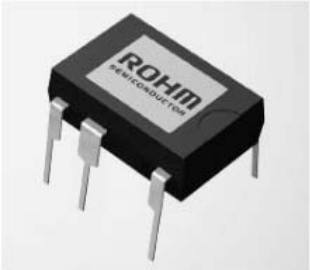

Figure 1. DIP7AK

Applications

- TV, Computer Display
- Other LCD backlighting

Typical Application Circuit

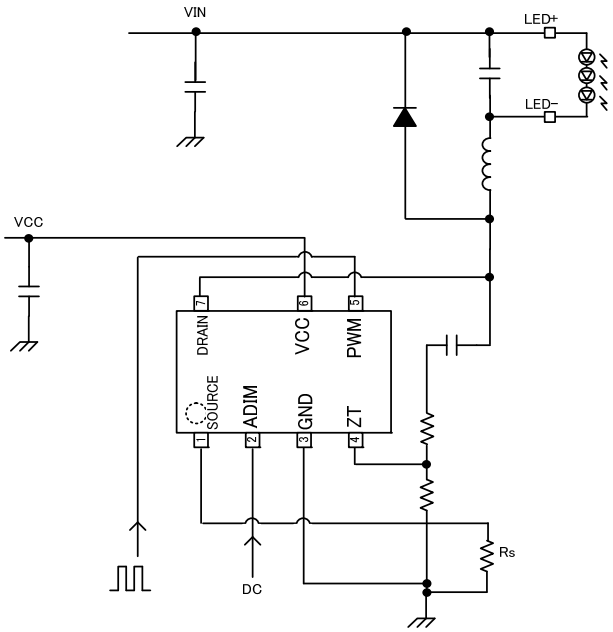

Figure 2. Typical Application Circuit

○Product structure : Silicon monolithic integrated circuit ○This product has no designed protection against radioactive rays

© 2016 ROHM Co., Ltd. All rights reserved.

Downloaded from Arrow.com.

1.3 Pin Configuration

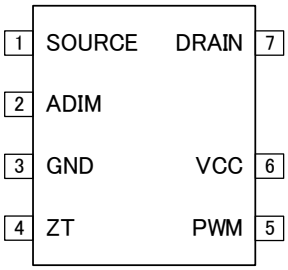

Figure 3. Pin Configuration

1.4 Pin Descriptions

Pin No.	Pin Name	Function
1	SOURCE	Inductor current sensing pin
2	ADIM	Analog dimming signal input and error detection output pin
3	GND	-
4	ZT	Zero current detection pin
5	PWM	PWM signal input pin
6	VCC	Power supply pin
7	DRAIN	MOSFET DRAIN pin

1. 5 Block Diagram

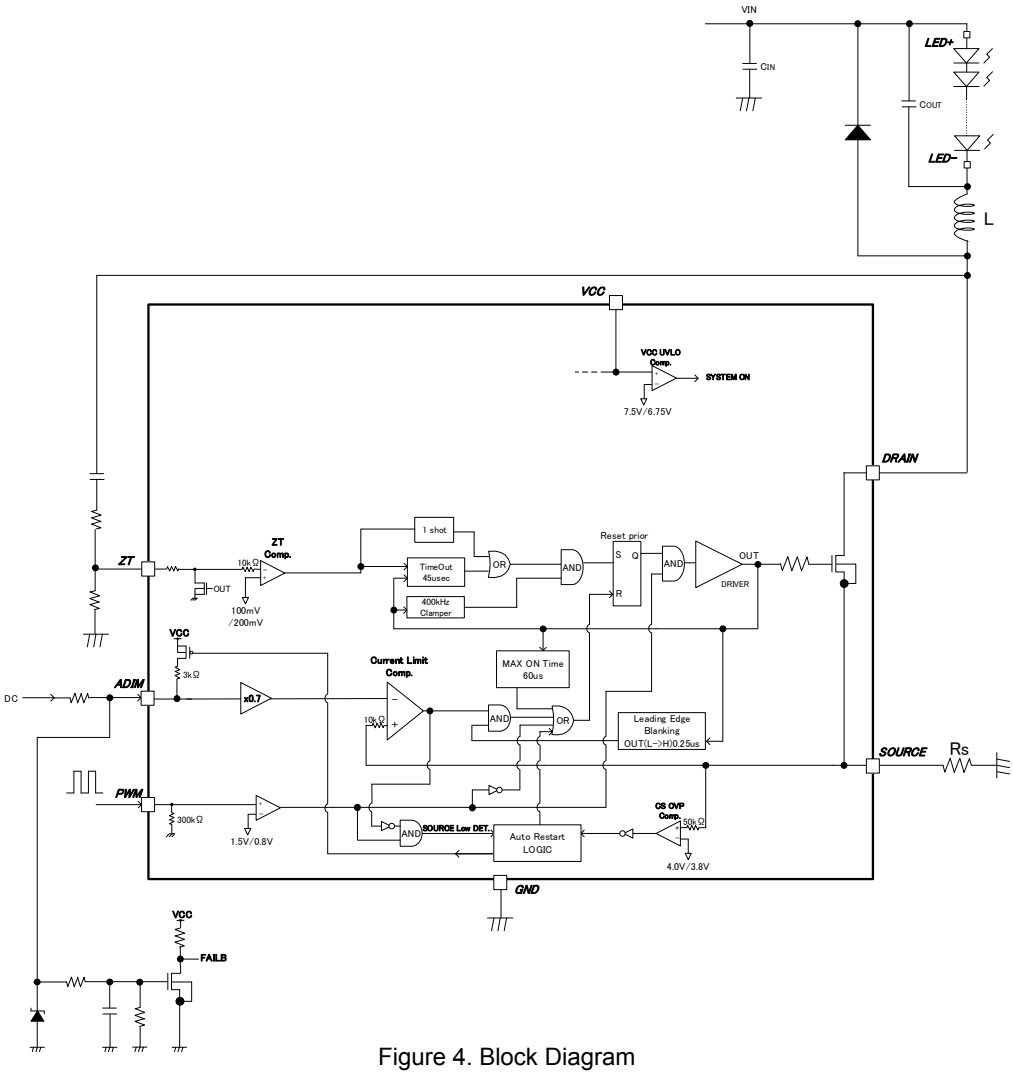

Figure 4. Block Diagram

© 2016 ROHM Co., Ltd. All rights reserved.

Downloaded from Arrow.com.

1.6 Absolute Maximum Ratings (Ta=25°C)

Parameter	Symbol	Rating	Unit
Power Supply Voltage	VCC	-0.3 to +36	V
ADIM, PWM Pin Voltage	ADIM, PWM	-0.3 to +36	V
SOURCE Pin Voltage	SOURCE	-0.3 to +6.5	V
ZT Pin Voltage	ZT	-1.0 to +10.5	V
DRAIN Pin Voltage	DRAIN	250	V
ZT Pin Current	I_{ZT}	±4	mA
Pulsed Drain Current	I_{DP}	16 (Note 1)	A
Power Dissipation	Pd	1.00 (Note 2)	W
Operating Temperature Range	Topr	-40 to +105	°C
Junction Temperature	Tjmax	150	°C
Storage Temperature Range	Tstg	-55 to +150	°C

(Note 1) Pulse width=10μs, Duty cycle=1%
(Note 2) In the case of mounting 1 layer glass epoxy base-plate of 74.2mm×74.2mm×1.6mm, derate by 8mW/°C when operating above Ta=25°C.

1.7 Recommended Operating Ranges

Parameter	**Symbol**	**Range**	**Unit**
Power Supply Voltage	VCC	9.0 to 35.0	V
DRAIN Pin Voltage	VDRAIN	~ 250	V
ADIM Input Voltage	VADIM	0.45 ~ 2.0(Note3)	V

(Note 3) To use the whole range of the ADIM voltage range, it is recommended not to exceed maximum frequency and maximum ON time.

1.8 Electrical Characteristics MOSFET (Unless otherwise specified VCC=12V Ta=25°C)

Parameter	Symbol	Min	Typ	Max	Unit	Conditions
Drain – Source Voltage	$V_{(BR)DDS}$	250	-	-	V	I_D=1mA / V_{GS}=0V
Zero Gate Voltage Drain Current	I_{DSS}	-	-	100	μA	V_{DS}=250V / V_{GS}=0V
On-Resistance	$R_{DS(ON)}$	-	0.93	1.30	Ω	I_D=0.25A / V_{GS}=10V

1.9 Electrical Characteristics 1/2 (Unless otherwise specified VCC=12V Ta=25°C)

Parameter	Symbol	Min	Typ	Max	Unit	Conditions
[Circuit Current]						
Circuit Current (ON)	I_{ON}	350	700	1000	μA	PWM=L
[VCC Pin Protection]						
VCC UVLO Release Voltage	V_{UVLO_VCC}	6.5	7.5	8.5	V	VCC=sweep up
VCC UVLO Hysteresis	V_{UHYS_VCC}	500	750	1000	mV	VCC=sweep down
[DC/DC Converter (Turn On)]						
ZT Comparator Voltage 1	V_{ZT1}	60	100	140	mV	ZT=sweep down
ZT Comparator Voltage 2	V_{ZT2}	120	200	280	mV	ZT=sweep up
ZT Comparator Hysteresis	V_{ZTHYS}	-	100	-	mV	V_{ZTHYS}= V_{ZT2}- V_{ZT1}
ZT Trigger Time-out Time	T_{ZTOUT}	30	45	60	μs	V_{SOURCE}=0V
[DC/DC Converter (turn-off)]						
Current Detection Voltage 1	$V_{SOURCE1}$	1.034	1.050	1.066	V	ADIM=1.5V
Current Detection Voltage 2	$V_{SOURCE2}$	1.383	1.400	1.417	V	ADIM=2.0V
Current Detection Clamp Voltage	V_{CLP}	1.393	1.415	1.436	V	ADIM=2.2V
Maximum Frequency	F_{MAX}	360	400	440	kHz	
Leading Edge Blank Time	T_{LEB}	-	0.25	-	μs	
Turn-off Time	T_{OFF}	-	0.2	-	μs	
Maximum ON Time	T_{max}	45	60	75	μs	

© 2016 ROHM Co., Ltd. All rights reserved.

Downloaded from Arrow.com.

1.9 Electrical Characteristics 2/2 (Unless otherwise specified VCC=12V Ta=25°C)

Parameter	Symbol	Min	Typ	Max	Unit	Conditions
[DC/DC Protection]						
SOURCE OVP Voltage	V_{SUROVP}	3.8	4.0	4.2	V	SOURCE=sweep up
SOURCE OVP Hysteresis	V_{SURHYS}	100	200	400	mV	SOURCE=sweep down
SOURCE OVP Mask Time	T_{SURMSK}	5	10	20	μs	
[Dimming Control Block]						
PWM pin HIGH Voltage	V_{PWM_H}	1.5	-	35	V	PWM=sweep up
PWM pin LOW Voltage	V_{PWM_L}	-0.3	-	0.8	V	PWM= sweep down
PWM pin Pull-Down Resistance	R_{PWM}	180	300	420	kΩ	PWM=3.0V
ADIM pin Leak Current	I_{ADIM}	-2	0	2	μA	ADIM=2.0V
ADIM pin Pull-Up Resistance at Latch off state	RLO	-	3.0	6.0	kΩ	SOURCE=5.0V

2.1 Pin Descriptions

○Pin 1: SOURCE

The source of built-in MOSFET.

This pin controls ON width (turn-off) of the switching MOSFET. The detect voltage is set by the DC voltage of the ADIM pin. Please refer to the ADIM pin description.

In the driving timing of turn ON of the MOSFET, switching noise is generated. Because the SOURCE voltage rises by the switching noise, the OFF detection may be activated illegally. For prevention of this false detection, it has a blanking function to mask detection (0.25us typ.) after MOSFET is turned ON from OFF state built-in (Leading Edge Blanking function). Please refer to the time chart in the section 3.3.1.

This pin has three kinds of protection functions as following.

(i) SOURCE OVP

When the SOURCE pin is more than 4.0V(typ.), because of larger current for detection resistor than normal dimming operation, the state is judged as an abnormal after 10us(typ.) and outputs FAIL signal (ADIM is pulled up to VCC level). And after 390us(typ.) has passed, the operation is restarted. Please refer to the time chart in the section 3.3.6.

(ii) SOURCE LOW

When SOURCE=L, PWM=H continues 180us(typ.) without normal voltage being input into SOURCE pin, the state is judged as an abnormal condition and outputs FAIL signal (ADIM is pulled up to VCC level). And after 390us(typ.) has passed, the operation is restarted. Please refer to the time chart in the section 3.3.7.

(iii) LEB DET

When the state that MOSFET turns on only in the term of LEB continues 180us(typ.), the state is judged as an abnormal condition and outputs FAIL signal (ADIM is pulled up to VCC level). And after 390us(typ.) has passed, the operation is restarted. Please refer to the time chart in the section 3.3.8.

○Pin 2: ADIM

This is the input pin for the analog dimming signal. Please input a certain bias into this pin, because the internal resistance is not connected to a certain bias. This is why the input level is not affected by the input current or the output current.

The SOURCE pin detection voltage is defined as 0.7 times level of this ADIM pin level. If more than 2.0V is input, the SOURCE detect voltage is clamped to the constant level, in case LED large current flow. In this condition, the input current of ADIM pin is caused.

As for the relations of ADIM pin voltage and current detection voltage V_{SOURCE}(SOURCE pin voltage), the equation is the following.

$$V_{SOURCE}[V] = V_{ADIM}[V] \times 0.7 (V_{ADIM} < 2.0V)$$
$$V_{SOURCE}[V] = 1.415[V] \qquad (V_{ADIM} > 2.0V)$$

The ADIM pin serves as FAIL signal output.
Please refer to the table 1 in the section 2.2,
and the time chart in the section 3.3.6, 3.3.7, 3.3.8.

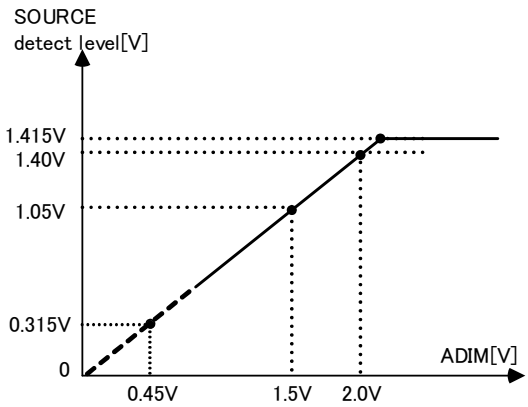

Figure 5. Analog dimming character

© 2016 ROHM Co., Ltd. All rights reserved.

Downloaded from Arrow.com.

○Pin 3: GND

It is the GND in the IC.

○Pin 4: ZT

The ZT pin controls OFF width (turn on). There are two factors to assert MOSFET=ON.

(i) At the timing that the coil current decrease to zero, the drain potential of the MOSFET drops. The divided potential by resistor is input to ZT pin. Only when ZT potential cross V_{ZT1}(typ.=100mV), the asserting signal which the MOSFET can turn on is generated. (ONE SHOT operation)

(ii) The ZT time-out function make the switching MOSFET ON compulsively, in the case that the assertion MOSFET ON does not take place for the constant interval, that is, T_{ZTOUT}(45us typ.) which is counted from the timing the MOSFET OFF. Please refer to the time chart in the section 3.3.5.

Both factors (i) (ii) are restricted for ON timing when oscillatory frequency is too fast, by maximum frequency F_{MAX}=400kHz(typ.).

In addition, the MOSFET is not turned on, in the input condition that should be off such as SOURCE> 3.0V.

○Pin 5: PWM

This is the input pin of the PWM dimming signal. The dimming is realized by adjusting the input DUTY of the PWM pin. The input range of the L, H level of the PWM pin is the following. In addition, The pull-down resister is 300kΩ(typ.) inside IC.

State	PWM pin voltage
PWM=H	PWM = 1.5V to 35.0V
PWM=L	PWM = - 0.3V to 0.8V

○Pin 6: VCC

This is the power supply pin of the IC. The input range is 9.0 to 35.0V.
When VCC is more than 7.5V(typ.), the operation starts, and shut down in less than VCC=6.75V(typ.).
The switching as the driver causes the VCC voltage amplitude. Please input in the condition VCC>9.0V continuously.
If the lower VCC voltage is input continuously, the IC temperature may be increased.

○Pin 7: DRAIN

The drain of the built-in MOSFET. The rating of this pin is 250V.

2.2 The list of the protection function detection condition and operation

The operation of each protection is shown in table 1.

Table 1. The operation mode of the protection

Protection name	Detection pin	Detection condition	Release condition	Detection timer	Protection type	Operation at detection		
						MOS	ADIM(FAIL)	Auto-Restart Timer
VCC UVLO	VCC	VCC<6.75V	VCC>7.5V	Immediately	Immediately Auto-Restart	OFF	Normal	Immediately
SOURCE OVP	SOURCE	SOURCE > 4.0V	SOURCE < 3.8V	10us	Auto-Restart	OFF	Pull up to VCC	390us
SOURCE LOW	SOURCE	SOURCE=L and PWM=H	SOURCE=H or PWM=L	180us	Auto-Restart	OFF	Pull up to VCC	390us
LEB DET	SOURCE	MOSFET=ON time is around 0.25us and PWM=H	MOSFET=ON time > 0.25us or PWM=L	180us	Auto-Restart	OFF	Pull up to VCC	390us

© 2016 ROHM Co., Ltd. All rights reserved.

Downloaded from Arrow.com.

3.1 Parts Setting Example

The circuit point the symbol annotating is shown in the right diagram.

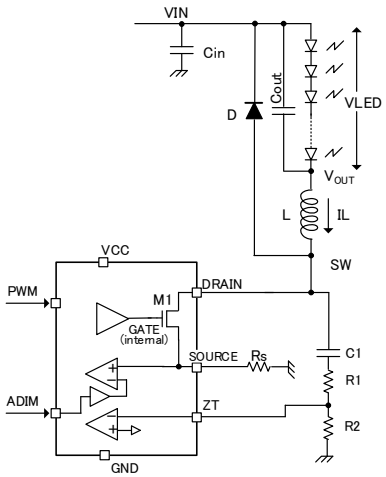

Figure 6. Each pin waveform

[1]…During M1=ON, as the coil voltage of its both side can approximate VIN - VLED, the slope of IL; $Slope_{IL_ON}$ is

$$Slope_{IL_ON} = \frac{(VIN - VLED)}{L}$$

[2]…During M1=OFF, as the coil voltage of its both side can approximate VLED, the slope of IL; $Slope_{IL_OFF}$ is

$$Slope_{IL_OFF} = \frac{VLED}{L}$$

The equation can be expressed above.

It is necessary for VIN, VLED, L to meet the following condition.

(a) Maximum ON time of the OUT pin (maximum ON width: T_{MAX}) is 60us(typ.).

$$T_{OUT_ON} < T_{MAX}$$

(b) The resonance frequency is lower than maximum frequency (F_{MAX}) 400kHz (typ.)

$$\frac{1}{(T_{OUT_ON} + T_{OUT_OFF})} < F_{MAX}$$

Please refer the time chart in the section 3.3.3, 3.3.4.

[3]…When the MOSFET M1 is turned off, ZT increases by the SW bounce. It is necessary to set R2 / (R1+R2) so that the voltage peak of ZT does not exceed around 5V.

[4]…After that, the ZT pin gradually decreases, the decline is decided by C1, (R1+R2).

[5]…At the timing of IL = 0mA, SW suddenly decreases, therefore ZT decreases suddenly. The ZT slope is decided by C1, (R1+R2). The delay exists from the timing IL = 0mA to reach the detection level 100mV of ZT.

Cout smoothes an LED current. Ripple current of the LED becomes larger with Cout smaller constant. And when larger Cout is used, the response of an LED current is slow. Rg can set the switching speed.

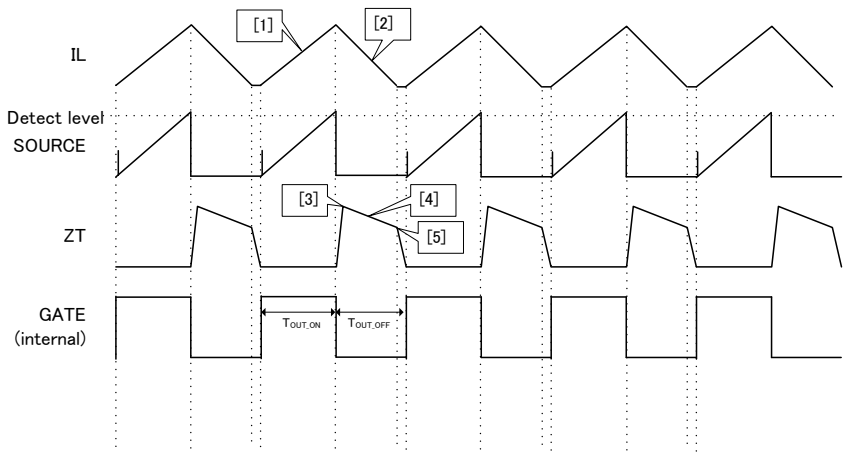

Figure 7. Dimming Waveform

© 2016 ROHM Co., Ltd. All rights reserved.

Downloaded from Arrow.com.

3.2 LED current setting

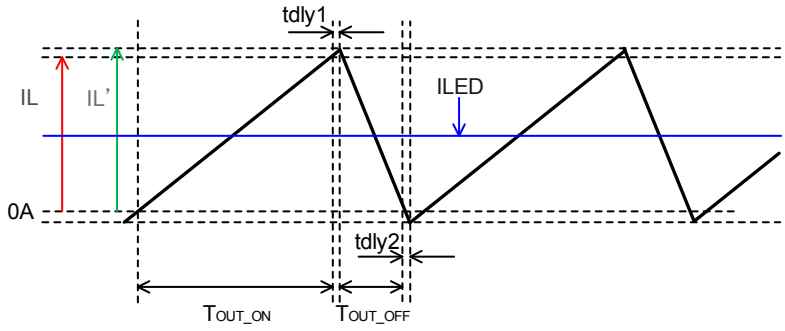

Figure 8. Coil current and LED current

The LED current (ILED) is expressed as follows.

○LED current (ILED) setting equation

$$ILED[mA] = \frac{(T_{OUT_ON} + T_{OUT_OFF} + tdly1)[\mu s]\left(1 - \left(\frac{tdly2[\mu s]}{T_{OUT_OFF}[\mu s]}\right)^2\right)}{2 \times (T_{OUT_ON} + T_{OUT_OFF} + tdly1 + tdly2)[\mu s]} \times IL'[mA]$$

Where

T_{OUT_ON} is the ON-time of the MOSFET(M1)
T_{OUT_OFF} is the OFF-time of the MOSFET(M1)
tdly1 is the turn-off delay time of the MOSFET(M1)
tdly2 is the turn-on delay time of the MOSFET(M1)
IL' is the coil current considering tdly1

$$T_{OUT_ON}[\mu s] = \frac{V_{SOURCE}[V] \times L[mH]}{(VIN - VLED)[V] \times R_S[\Omega]} \times 1000$$

$$T_{OUT_OFF}[\mu s] = \frac{L[mH] \times IL'[mA]}{VLED[V]}$$

$$IL'[mA] = \left(\frac{V_{SOURCE}[V]}{R_S[\Omega]}\right) \times \left(1 + \frac{tdly1[\mu s]}{T_{OUT_ON}[\mu s]}\right) \times 1000$$

$$V_{SOURCE}[V] = V_{ADIM}[V] \times 0.7 (V_{ADIM} < 2.0V)$$
$$V_{SOURCE}[V] = 1.415[V] \qquad (V_{ADIM} > 2.0V)$$

【setting example】

If VIN=100V, VLED=60V, V_{SOURCE}=1.4V, R_S=1.4Ω, L=0.22mH, tdly1=0.2us, tdly2=0.4us, ILED is calculated as follows.

$$T_{OUT_ON} = \frac{1.4[V] \times 0.22[mH]}{(100 - 60)[V] \times 1.4[\Omega]} \times 1000 = 5.7[\mu s]$$

$$IL'[mA] = \left(\frac{1.4[V]}{1.4[\Omega]}\right) \times \left(1 + \frac{0.2[\mu s]}{5.7[\mu s]}\right) \times 1000 = 1035[mA]$$

$$T_{OUT_OFF} = \frac{0.22[mH] \times 1036[mA]}{60[V]} = 3.8[\mu s]$$

Thus,

$$ILED = \frac{(5.7 + 3.8 + 0.2)[\mu s]\left(1 - \left(\frac{0.4[\mu s]}{3.8[\mu s]}\right)^2\right)}{2 \times (5.7 + 3.8 + 0.2 + 0.4)[\mu s]} \times 1035[mA] = 492[mA]$$

© 2016 ROHM Co., Ltd. All rights reserved.

Downloaded from Arrow.com.

【The LED current's shift by the fluctuation of tdly1 and tdly2】

The LED current is shifted by the fluctuation of tdly1 and tdly2. In particular, tdly2, which is decided by the inductance (L), the capacitance of the MOSFET(M1), the Diode(D) and the ZT(C1), affects the LED current.

If the LED current (ILED') is defined when the fluctuation of the tdly2 is +10% from the setting example (in other words, tdly2=0.44us), ILED' is calculated as follows.

$$ILED' = \frac{(5.7+3.8+0.2)[\mu s]\left(1-\left(\frac{0.44[\mu s]}{3.8[\mu s]}\right)^2\right)}{2\times(5.7+3.8+0.2+0.44)[\mu s]}\times 1035[mA] = 489[mA]$$

Thus, the ratio of difference is

$$\Delta ILED = \frac{(ILED'-ILED)[mA]}{ILED[mA]}\times 100 = \frac{(489-492)[mA]}{492[mA]}\times 100 = -0.6[\%]$$

3.3 Timing Chart

3.3.1 Starting Up (1)

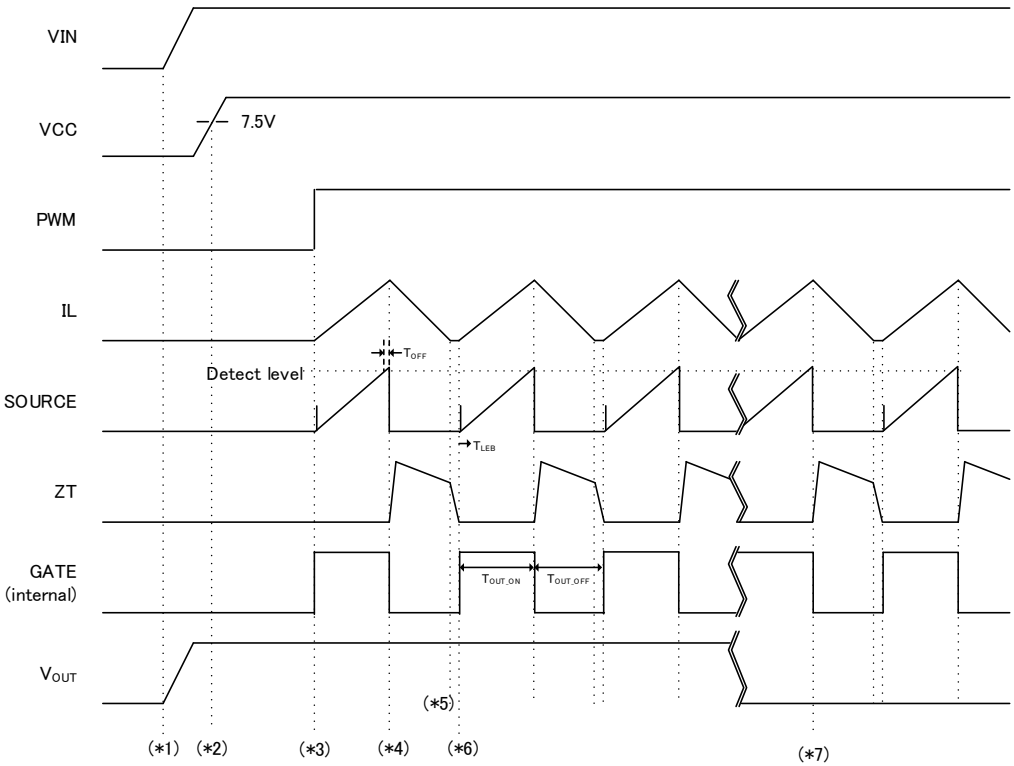

Figure 9. Starting up waveform (1)

(*1)…As for the sequence, it is recommended that VIN turns on firstly and turns off lastly.
(*2)…The IC starts when VCC is more than 7.5V(typ.).
(*3)…PWM=H enables the MOSFET turn on. In the figure, then PWM = 100% is input.
(*4)…When SOURCE pin reached the detection level, the MOSFET turns off after the time T_{OFF}.
(*5)…When the coil current decreases to zero (IL = 0mA), ZT suddenly decreases. When ZT reaches the detection level, the MOSFET turns on.
(*6)…The SOURCE switching noise is masked during Leading Edge Blank time T_{LEB} (0.25μs typ.), which counts from the MOSFET=ON. During this terminal, the MOSFET is not turned off, even if higher than detection level are input.
(*7)…After VOUT decreases, Cout is charged enough, LED current flows.

© 2016 ROHM Co., Ltd. All rights reserved.

Downloaded from Arrow.com.

3.3.2 Starting Up (2)

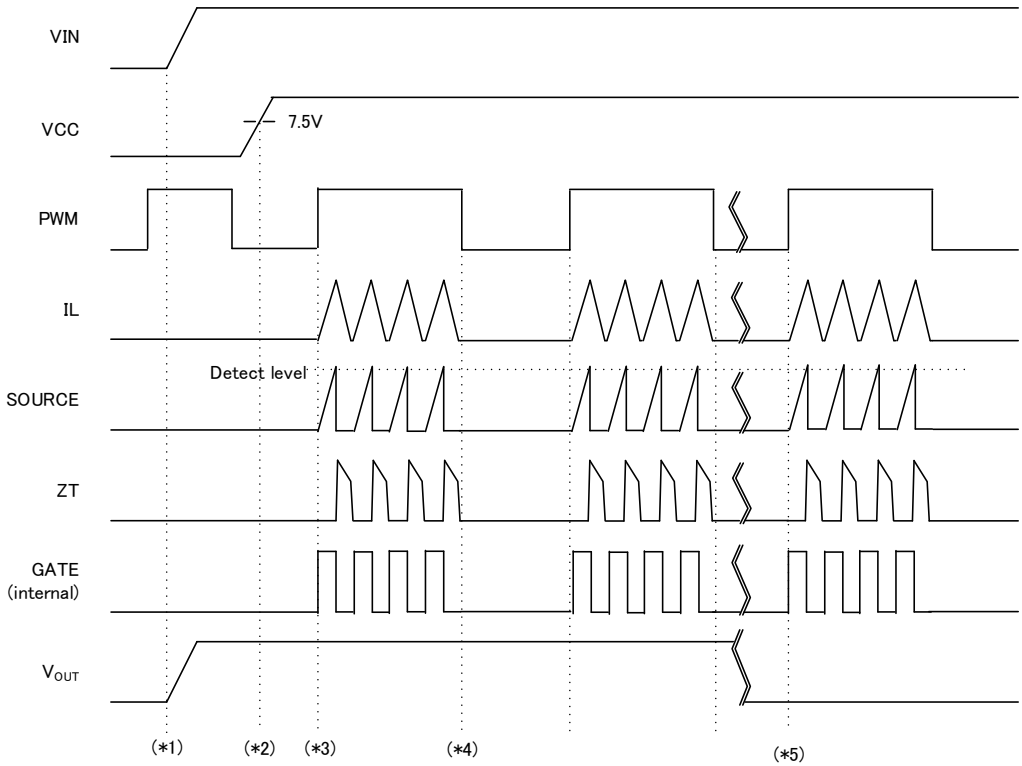

Figure 10. Starting up waveform (2)

(*1)…As for the sequence, it is recommended that VIN turns on firstly and turns off lastly.
(*2)…The IC starts when VCC is more than 7.5V(typ.).
(*3)…PWM=H enables the MOSFET turn on.
(*4)…PWM=L stops the switching operation.
(*5)…After VOUT decreases, Cout is charged enough, LED current flows.

© 2016 ROHM Co., Ltd. All rights reserved.

Downloaded from Arrow.com.

3.3.3 Maximum Frequency Operation

As for the resonance frequency, the IC works lower than maximum frequency (F_{MAX}) 400kHz (typ.). It prevents increase temperature because of the fast frequency switching.
In this operation, the LED current is lower than the setting value, because the interval of IL = 0mA is longer than expected.

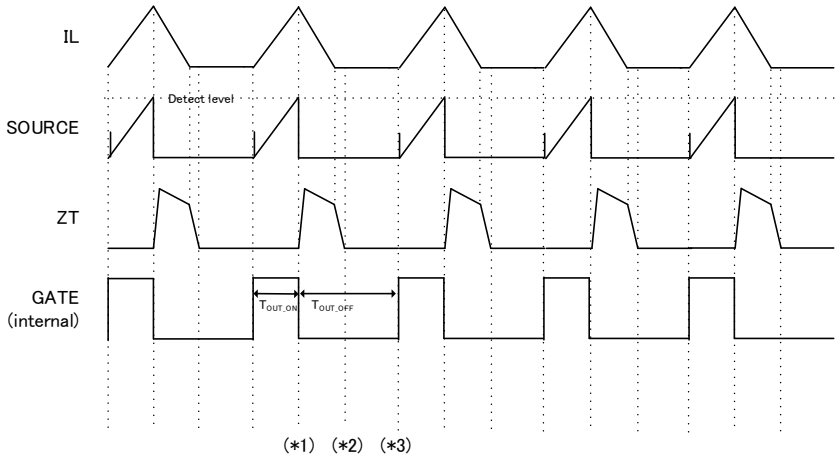

Figure 11. Maximum frequency operation waveform

(*1)…SOURCE reached the detection level, the MOSFET turns off.
(*2)…ZT reached the detection level, but cannot become next the MOSFET=ON when the operational frequency is too fast.
(*3)…After the certain interval, the MOSFET turns on. In this case,

$$\frac{1}{(T_{OUT_ON} + T_{OUT_OFF})} = F_{MAX}$$

Here, F_{MAX}=400kHz(typ).

3.3.4 Maximun On Time Operarion

As for the ON time, the IC works lower than maximum ON time (T_{MAX}) 60us(typ.). This is why MOS current and others are limited.
In this operation, the LED current is lower than the setting value, because IL does not increase to the expected value.

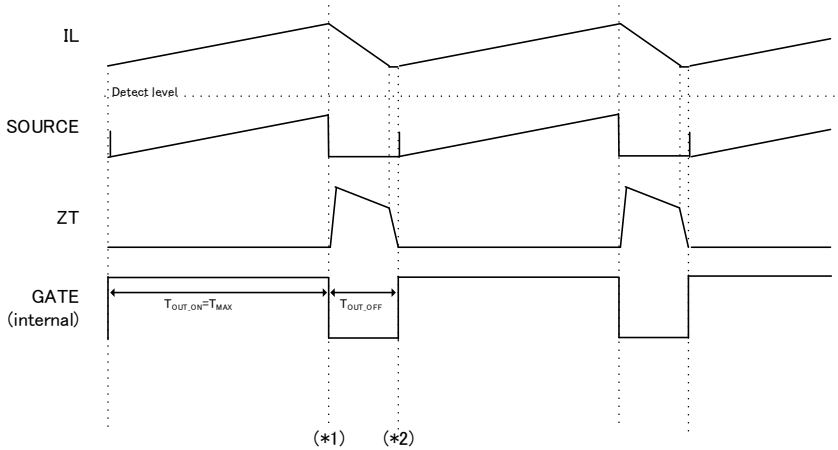

Figure 12. Maximum On time operation waveform

(*1)…SOURCE does not reach the detection level, but the MOSFET turns off because of T_{OUT_ON}=T_{MAX}.
(*2)…ZT reached the detection level, OUT=H is asserted.

© 2016 ROHM Co., Ltd. All rights reserved.

Downloaded from Arrow.com.

3.3.5 ZT Trigger Time-out Operation

When the operation is out of its resonance, for example, ZT always keeps L because of the abnormality of the external parts, this function turns on MOS with the constant interval T_{ZTOUT}(45us typ.).

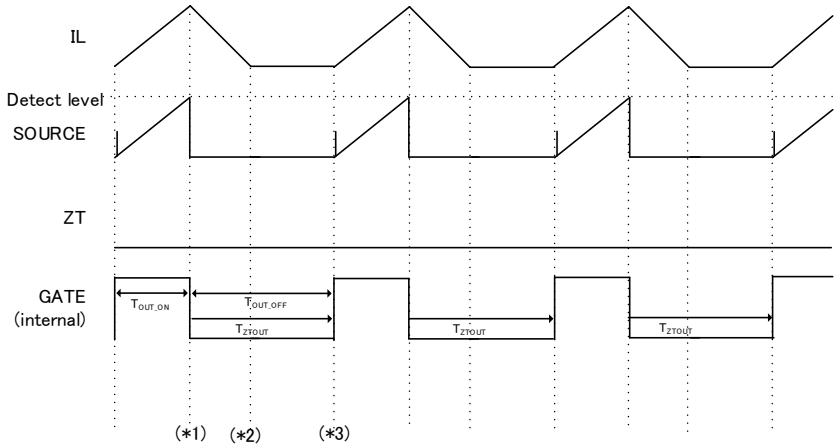

Figure 13. ZT trigger time-out operation waveform

(*1)…SOURCE reached the detection level, the MOSFET turns off.
(*2)…Because ZT is always L, it cannot be output next the MOSFET=ON.
(*3)…The switching MOSFET ON compulsively, in the case that the MOSFET=ON does not take place for the constant interval, that is, T_{ZTOUT}(45us typ.) which is counted from the timing the MOSFET=OFF. The time measurement of T_{ZTOUT} is no relation to the PWM logic.

© 2016 ROHM Co., Ltd. All rights reserved.

Downloaded from Arrow.com.

3.3.6 SOURCE OVP

This is the protection function which stops once and restarts after 390us(typ.), when the high voltage was input into SOURCE pin because of the abnormality of the external parts around IC.

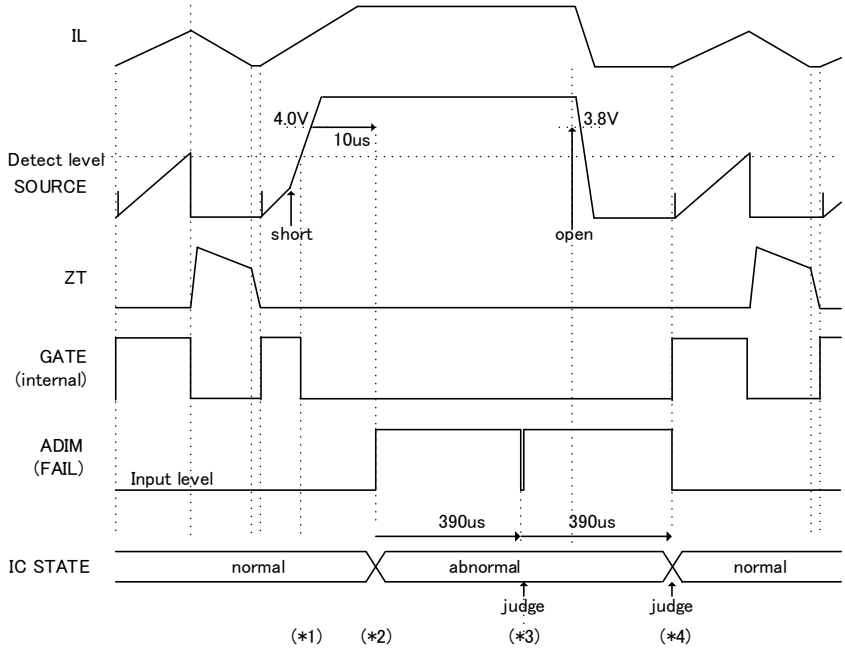

Figure 14. SOURCE OVP sequence waveform

(*1)…It is the example which the short circuit of the around IC parts so that the high voltage is input into on SOURCE pin. If SOURCE exceeds a detect level, the MOSFET turns off.
(*2)…If SOURCE>4.0V(typ.) continues more than 10us(typ.) nevertheless the MOSFET=OFF, the state is judged as abnormal and the operation is stopped for 390us(typ.).
(*3)…After 390us(typ.), the abnormality is judged again. In the figure, considering SOURCE>4.0V, the abnormality is still keeps and stop the operation.
(*4)…As a result of judgment again, an abnormal state is released in this figure and becomes SOURCE<3.8V(typ.). The operation is restarted.

© 2016 ROHM Co., Ltd. All rights reserved.

Downloaded from Arrow.com.

3.3.7 SOURCE LOW

This is the protection function which stops once and restarts after 390us(typ.), when SOURCE pin does not reach the detect level, because of the abnormality of the external parts around IC.

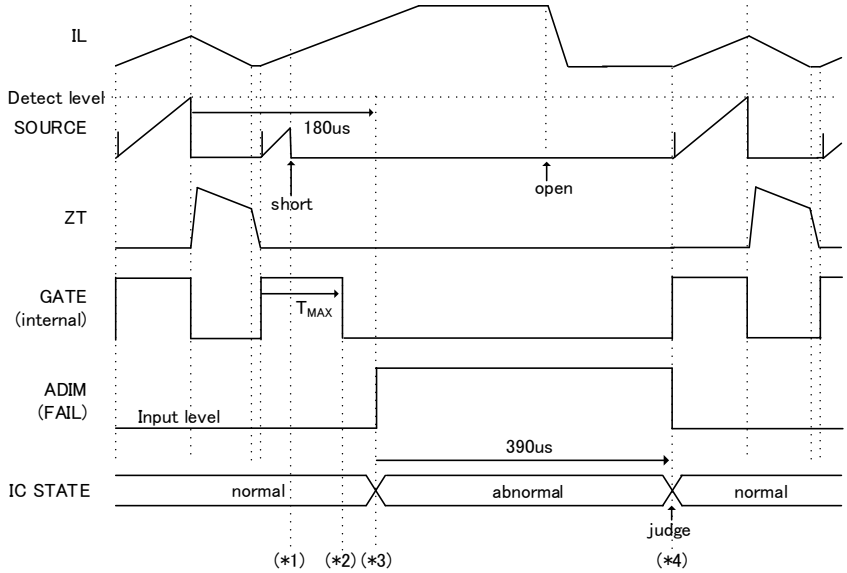

Figure 15. SOURCE LOW sequence waveform

(*1)…It is the example which the short circuit of the around IC parts so that SOURCE pin does not increase.
(*2)…The MOSFET turns off when SOURCE does not reach the detection level after maximum ON width T_{MAX} (60us typ.) from the MOSFET=ON.
(*3)…The state which SOURCE does not reach the detection level continues 180us(typ.), the state is judged as abnormal and the operation is stopped for 390us(typ.).
(*4)…The abnormality is judged again. The operation is restarted.

© 2016 ROHM Co., Ltd. All rights reserved.

Downloaded from Arrow.com.

3.3.8 LEB DET

This is the protection function which stops once and restarts after 390us(typ.), when the state that SOURCE pin rises rapidly continues, because of the abnormality of the external parts around IC.

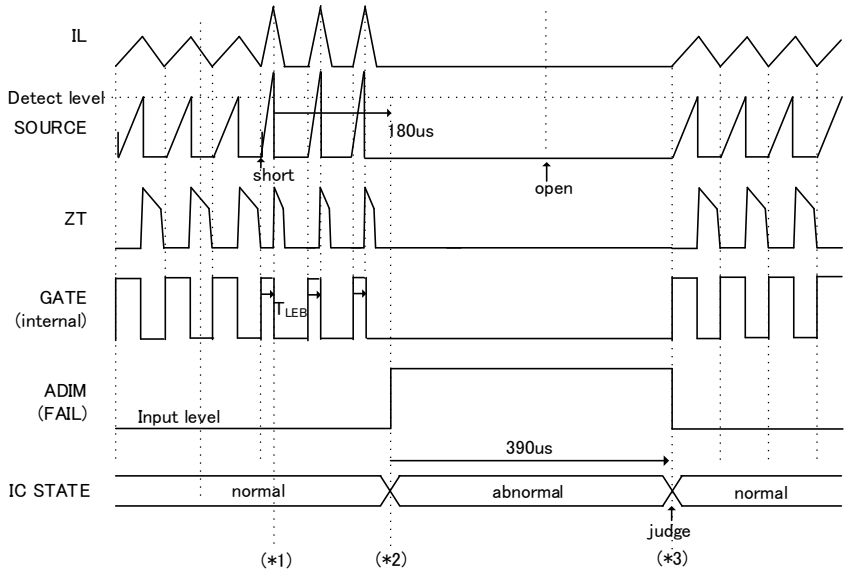

Figure 16. LEB DET sequence waveform

(*1)…This is the protection when the on-time of the MOSFET is T_{LEB}(0.25us typ.) because the SOURCE pin rises rapidly. The on-time of the MOSFET is not shorter than T_{LEB}.
(*2)…The state which (*1) continues 180us(typ.), the state is judged as abnormal and the operation is stopped for 390us(typ.).
(*3)…The abnormality is judged again. The operation is restarted.

© 2016 ROHM Co., Ltd. All rights reserved.

Downloaded from Arrow.com.

3.4 I/O Equivalent Circuits

GND / VCC	SOURCE / DRAIN	ADIM
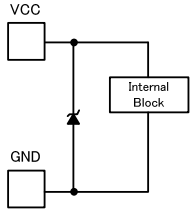	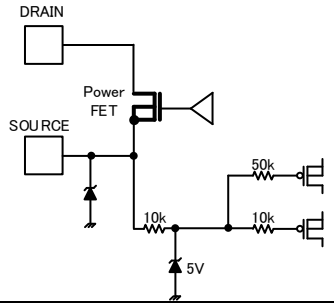	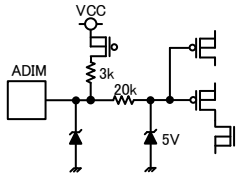
ZT	**PWM**	
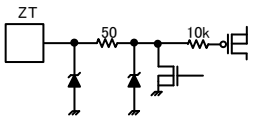	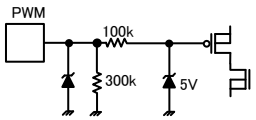	

© 2016 ROHM Co., Ltd. All rights reserved.

Downloaded from Arrow.com.

Operational Notes

1. **Reverse Connection of Power Supply**
   Connecting the power supply in reverse polarity can damage the IC. Take precautions against reverse polarity when connecting the power supply, such as mounting an external diode between the power supply and the IC's power supply pins.

2. **Power Supply Lines**
   Design the PCB layout pattern to provide low impedance supply lines. Furthermore, connect a capacitor to ground at all power supply pins. Consider the effect of temperature and aging on the capacitance value when using electrolytic capacitors.

3. **Ground Voltage**
   Ensure that no pins are at a voltage below that of the ground pin at any time, even during transient condition.

4. **Ground Wiring Pattern**
   When using both small-signal and large-current ground traces, the two ground traces should be routed separately but connected to a single ground at the reference point of the application board to avoid fluctuations in the small-signal ground caused by large currents. Also ensure that the ground traces of external components do not cause variations on the ground voltage. The ground lines must be as short and thick as possible to reduce line impedance.

5. **Thermal Consideration**
   Should by any chance the maximum junction temperature rating be exceeded the rise in temperature of the chip may result in deterioration of the properties of the chip. In case of exceeding this absolute maximum rating, increase the board size and copper area to prevent exceeding the maximum junction temperature rating.

6. **Recommended Operating Conditions**
   These conditions represent a range within which the expected characteristics of the IC can be approximately obtained. The electrical characteristics are guaranteed under the conditions of each parameter.

7. **Inrush Current**
   When power is first supplied to the IC, it is possible that the internal logic may be unstable and inrush current may flow instantaneously due to the internal powering sequence and delays, especially if the IC has more than one power supply. Therefore, give special consideration to power coupling capacitance, power wiring, width of ground wiring, and routing of connections.

8. **Operation Under Strong Electromagnetic Field**
   Operating the IC in the presence of a strong electromagnetic field may cause the IC to malfunction.

9. **Testing on Application Boards**
   When testing the IC on an application board, connecting a capacitor directly to a low-impedance output pin may subject the IC to stress. Always discharge capacitors completely after each process or step. The IC's power supply should always be turned off completely before connecting or removing it from the test setup during the inspection process. To prevent damage from static discharge, ground the IC during assembly and use similar precautions during transport and storage.

10. **Inter-pin Short and Mounting Errors**
    Ensure that the direction and position are correct when mounting the IC on the PCB. Incorrect mounting may result in damaging the IC. Avoid nearby pins being shorted to each other especially to ground, power supply and output pin. Inter-pin shorts could be due to many reasons such as metal particles, water droplets (in very humid environment) and unintentional solder bridge deposited in between pins during assembly to name a few.

11. **Unused Input Pins**
    Input pins of an IC are often connected to the gate of a MOS transistor. The gate has extremely high impedance and extremely low capacitance. If left unconnected, the electric field from the outside can easily charge it. The small charge acquired in this way is enough to produce a significant effect on the conduction through the transistor and cause unexpected operation of the IC. So unless otherwise specified, unused input pins should be connected to the power supply or ground line.

© 2016 ROHM Co., Ltd. All rights reserved.

Downloaded from Arrow.com.

Operational Notes – continued

12. Regarding the Input Pin of the IC

This monolithic IC contains P+ isolation and P substrate layers between adjacent elements in order to keep them isolated. P-N junctions are formed at the intersection of the P layers with the N layers of other elements, creating a parasitic diode or transistor. For example (refer to figure below):

When GND > Pin A and GND > Pin B, the P-N junction operates as a parasitic diode.
When GND > Pin B, the P-N junction operates as a parasitic transistor.

Parasitic diodes inevitably occur in the structure of the IC. The operation of parasitic diodes can result in mutual interference among circuits, operational faults, or physical damage. Therefore, conditions that cause these diodes to operate, such as applying a voltage lower than the GND voltage to an input pin (and thus to the P substrate) should be avoided.

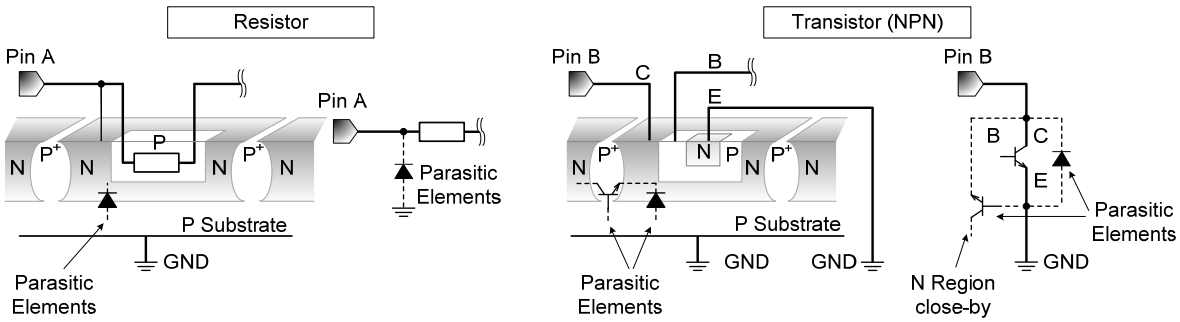

Figure 17. Example of monolithic IC structure

13. Ceramic Capacitor

When using a ceramic capacitor, determine the dielectric constant considering the change of capacitance with temperature and the decrease in nominal capacitance due to DC bias and others.

14. Area of Safe Operation (ASO)

Operate the IC such that the output voltage, output current, and the maximum junction temperature rating are all within the Area of Safe Operation (ASO).

15. Thermal Shutdown Circuit(TSD)

This IC has a built-in thermal shutdown circuit that prevents heat damage to the IC. Normal operation should always be within the IC's maximum junction temperature rating. If however the rating is exceeded for a continued period, the junction temperature (Tj) will rise which will activate the TSD circuit that will turn OFF all output pins. When the Tj falls below the TSD threshold, the circuits are automatically restored to normal operation.
Note that the TSD circuit operates in a situation that exceeds the absolute maximum ratings and therefore, under no circumstances, should the TSD circuit be used in a set design or for any purpose other than protecting the IC from heat damage.

16. Over Current Protection Circuit (OCP)

This IC incorporates an integrated overcurrent protection circuit that is activated when the load is shorted. This protection circuit is effective in preventing damage due to sudden and unexpected incidents. However, the IC should not be used in applications characterized by continuous operation or transitioning of the protection circuit.

© 2016 ROHM Co., Ltd. All rights reserved.

Downloaded from Arrow.com.

Ordering Information

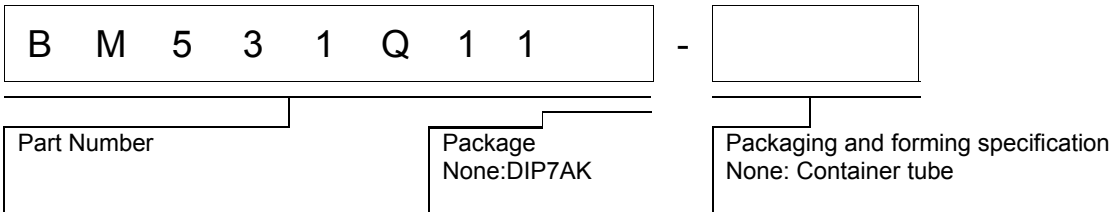

Marking Diagrams

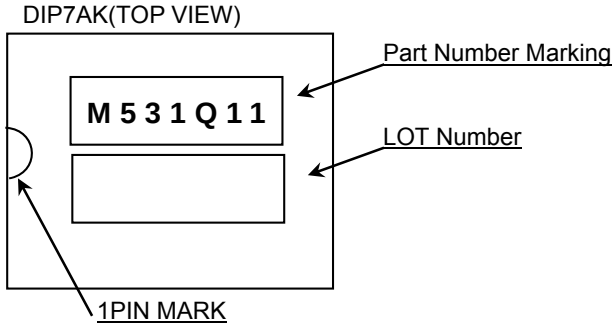

© 2016 ROHM Co., Ltd. All rights reserved.

Downloaded from Arrow.com.

●Physical Dimension, Tape and Reel Information

Package Name	DIP7AK

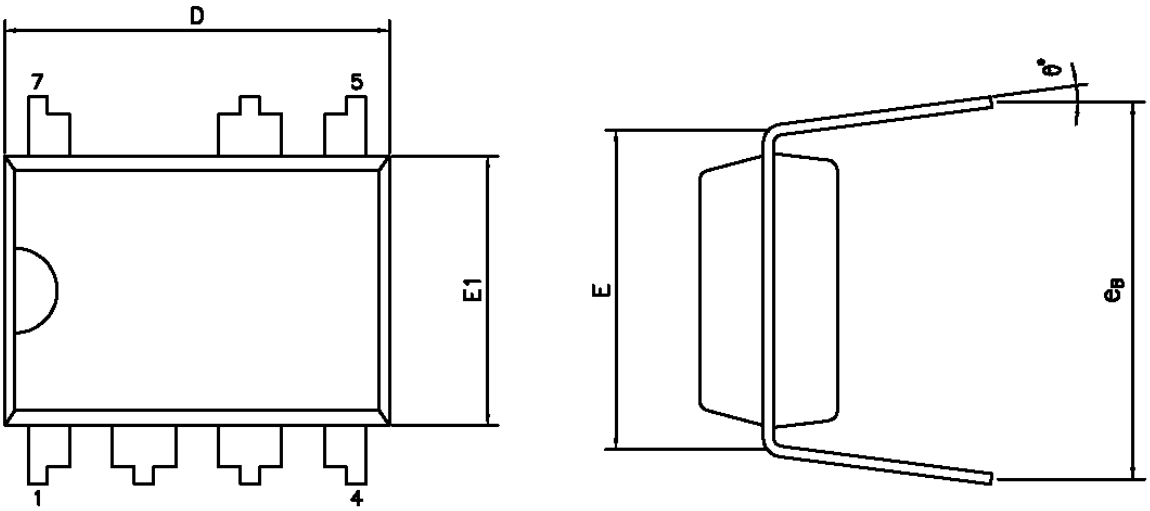

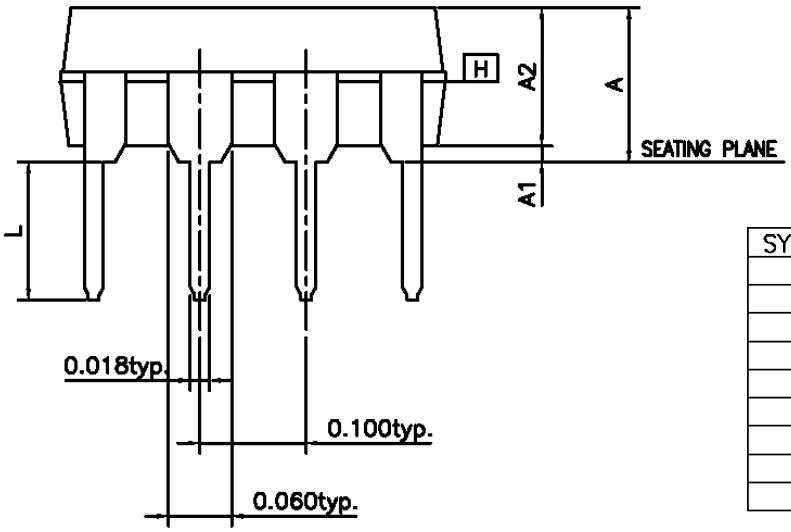

SYMBOLS	MIN.	NOR.	MAX.
A	–	–	0.210
A1	0.015	–	–
A2	0.125	0.130	0.135
D	0.355	0.365	0.400
E		0.300 BSC.	
E1	0.245	0.250	0.255
L	0.115	0.130	0.150
e_B	0.335	0.355	0.375
θ°	0	7	15

UNIT : INCH

NOTES:
1. JEDEC OUTLINE : N/A.
2. "D","E1" DIMENSIONS DO NOT INCLUDE MOLD FLASH OR PROTRUSIONS.MOLD FLASH OR PROTRUSIONS SHALL NOT EXCEED .010 INCH.
3. eB IS MEASURED AT THE LEAD TIPS WITH THE LEADS UNCONSTRAINED.
4. POINTED OR ROUNDED LEAD TIPS ARE PREFERRED TO EASE INSERTION.
5. DISTANCE BETWEEN LEADS INCLUDING DAM BAR PROTRUSIONS TO BE .005 INCH MININUM.
6. DATUM PLANE [H] COINCIDENT WITH THE BOTTOM OF LEAD, WHERE LEAD EXITS BODY.

< Container Information >

Container	Tube	
Quantity	50pcs/Tube	2000pcs/Box
Direction of feed	Direction of products isfixed in a container tube	

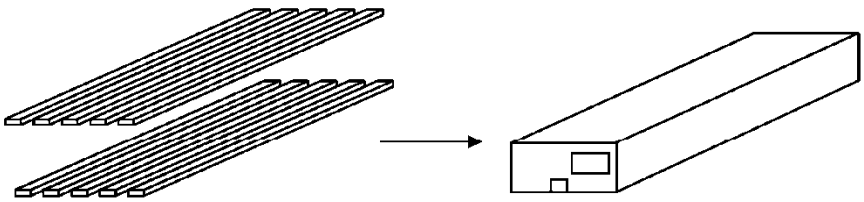

© 2016 ROHM Co., Ltd. All rights reserved.

Downloaded from Arrow.com.

Revision History

Date	Revision	Changes
22.Jul.2016	001	New Release

© 2016 ROHM Co., Ltd. All rights reserved.

Downloaded from Arrow.com.

Notice

Precaution on using ROHM Products

1. Our Products are designed and manufactured for application in ordinary electronic equipments (such as AV equipment, OA equipment, telecommunication equipment, home electronic appliances, amusement equipment, etc.). If you intend to use our Products in devices requiring extremely high reliability (such as medical equipment (Note 1), transport equipment, traffic equipment, aircraft/spacecraft, nuclear power controllers, fuel controllers, car equipment including car accessories, safety devices, etc.) and whose malfunction or failure may cause loss of human life, bodily injury or serious damage to property ("Specific Applications"), please consult with the ROHM sales representative in advance. Unless otherwise agreed in writing by ROHM in advance, ROHM shall not be in any way responsible or liable for any damages, expenses or losses incurred by you or third parties arising from the use of any ROHM's Products for Specific Applications.

(Note1) Medical Equipment Classification of the Specific Applications

JAPAN	USA	EU	CHINA
CLASSⅢ	CLASSⅢ	CLASSⅡb	CLASSⅢ
CLASSⅣ		CLASSⅢ	

2. ROHM designs and manufactures its Products subject to strict quality control system. However, semiconductor products can fail or malfunction at a certain rate. Please be sure to implement, at your own responsibilities, adequate safety measures including but not limited to fail-safe design against the physical injury, damage to any property, which a failure or malfunction of our Products may cause. The following are examples of safety measures:
   [a] Installation of protection circuits or other protective devices to improve system safety
   [b] Installation of redundant circuits to reduce the impact of single or multiple circuit failure

3. Our Products are designed and manufactured for use under standard conditions and not under any special or extraordinary environments or conditions, as exemplified below. Accordingly, ROHM shall not be in any way responsible or liable for any damages, expenses or losses arising from the use of any ROHM's Products under any special or extraordinary environments or conditions. If you intend to use our Products under any special or extraordinary environments or conditions (as exemplified below), your independent verification and confirmation of product performance, reliability, etc, prior to use, must be necessary:
   [a] Use of our Products in any types of liquid, including water, oils, chemicals, and organic solvents
   [b] Use of our Products outdoors or in places where the Products are exposed to direct sunlight or dust
   [c] Use of our Products in places where the Products are exposed to sea wind or corrosive gases, including Cl_2, H_2S, NH_3, SO_2, and NO_2
   [d] Use of our Products in places where the Products are exposed to static electricity or electromagnetic waves
   [e] Use of our Products in proximity to heat-producing components, plastic cords, or other flammable items
   [f] Sealing or coating our Products with resin or other coating materials
   [g] Use of our Products without cleaning residue of flux (even if you use no-clean type fluxes, cleaning residue of flux is recommended); or Washing our Products by using water or water-soluble cleaning agents for cleaning residue after soldering
   [h] Use of the Products in places subject to dew condensation

4. The Products are not subject to radiation-proof design.

5. Please verify and confirm characteristics of the final or mounted products in using the Products.

6. In particular, if a transient load (a large amount of load applied in a short period of time, such as pulse. is applied, confirmation of performance characteristics after on-board mounting is strongly recommended. Avoid applying power exceeding normal rated power; exceeding the power rating under steady-state loading condition may negatively affect product performance and reliability.

7. De-rate Power Dissipation depending on ambient temperature. When used in sealed area, confirm that it is the use in the range that does not exceed the maximum junction temperature.

8. Confirm that operation temperature is within the specified range described in the product specification.

9. ROHM shall not be in any way responsible or liable for failure induced under deviant condition from what is defined in this document.

Precaution for Mounting / Circuit board design

1. When a highly active halogenous (chlorine, bromine, etc.) flux is used, the residue of flux may negatively affect product performance and reliability.

2. In principle, the reflow soldering method must be used on a surface-mount products, the flow soldering method must be used on a through hole mount products. If the flow soldering method is preferred on a surface-mount products, please consult with the ROHM representative in advance.

For details, please refer to ROHM Mounting specification

© 2015 ROHM Co., Ltd. All rights reserved.

Downloaded from Arrow.com.

Precautions Regarding Application Examples and External Circuits

1. If change is made to the constant of an external circuit, please allow a sufficient margin considering variations of the characteristics of the Products and external components, including transient characteristics, as well as static characteristics.

2. You agree that application notes, reference designs, and associated data and information contained in this document are presented only as guidance for Products use. Therefore, in case you use such information, you are solely responsible for it and you must exercise your own independent verification and judgment in the use of such information contained in this document. ROHM shall not be in any way responsible or liable for any damages, expenses or losses incurred by you or third parties arising from the use of such information.

Precaution for Electrostatic

This Product is electrostatic sensitive product, which may be damaged due to electrostatic discharge. Please take proper caution in your manufacturing process and storage so that voltage exceeding the Products maximum rating will not be applied to Products. Please take special care under dry condition (e.g. Grounding of human body / equipment / solder iron, isolation from charged objects, setting of Ionizer, friction prevention and temperature / humidity control).

Precaution for Storage / Transportation

1. Product performance and soldered connections may deteriorate if the Products are stored in the places where:
   [a] the Products are exposed to sea winds or corrosive gases, including Cl2, H2S, NH3, SO2, and NO2
   [b] the temperature or humidity exceeds those recommended by ROHM
   [c] the Products are exposed to direct sunshine or condensation
   [d] the Products are exposed to high Electrostatic

2. Even under ROHM recommended storage condition, solderability of products out of recommended storage time period may be degraded. It is strongly recommended to confirm solderability before using Products of which storage time is exceeding the recommended storage time period.

3. Store / transport cartons in the correct direction, which is indicated on a carton with a symbol. Otherwise bent leads may occur due to excessive stress applied when dropping of a carton.

4. Use Products within the specified time after opening a humidity barrier bag. Baking is required before using Products of which storage time is exceeding the recommended storage time period.

Precaution for Product Label

A two-dimensional barcode printed on ROHM Products label is for ROHM's internal use only.

Precaution for Disposition

When disposing Products please dispose them properly using an authorized industry waste company.

Precaution for Foreign Exchange and Foreign Trade act

Since concerned goods might be fallen under listed items of export control prescribed by Foreign exchange and Foreign trade act, please consult with ROHM in case of export.

Precaution Regarding Intellectual Property Rights

1. All information and data including but not limited to application example contained in this document is for reference only. ROHM does not warrant that foregoing information or data will not infringe any intellectual property rights or any other rights of any third party regarding such information or data.

2. ROHM shall not have any obligations where the claims, actions or demands arising from the combination of the Products with other articles such as components, circuits, systems or external equipment (including software).

3. No license, expressly or implied, is granted hereby under any intellectual property rights or other rights of ROHM or any third parties with respect to the Products or the information contained in this document. Provided, however, that ROHM will not assert its intellectual property rights or other rights against you or your customers to the extent necessary to manufacture or sell products containing the Products, subject to the terms and conditions herein.

Other Precaution

1. This document may not be reprinted or reproduced, in whole or in part, without prior written consent of ROHM.

2. The Products may not be disassembled, converted, modified, reproduced or otherwise changed without prior written consent of ROHM.

3. In no event shall you use in any way whatsoever the Products and the related technical information contained in the Products or this document for any military purposes, including but not limited to, the development of mass-destruction weapons.

4. The proper names of companies or products described in this document are trademarks or registered trademarks of ROHM, its affiliated companies or third parties.

© 2015 ROHM Co., Ltd. All rights reserved.

Downloaded from Arrow.com.

General Precaution

1. Before you use our Products, you are requested to carefully read this document and fully understand its contents. ROHM shall not be in any way responsible or liable for failure, malfunction or accident arising from the use of any ROHM's Products against warning, caution or note contained in this document.

2. All information contained in this document is current as of the issuing date and subject to change without any prior notice. Before purchasing or using ROHM's Products, please confirm the latest information with a ROHM sales representative.

3. The information contained in this document is provided on an "as is" basis and ROHM does not warrant that all information contained in this document is accurate and/or error-free. ROHM shall not be in any way responsible or liable for any damages, expenses or losses incurred by you or third parties resulting from inaccuracy or errors of or concerning such information.

© 2015 ROHM Co., Ltd. All rights reserved.

Downloaded from Arrow.com.