HDLS LS2 SERIES

002426
Issue 3

MICRO SWITCH Heavy-Duty Limit Switch (Stainless Steel)

DESCRIPTION

When the application requires an industrial grade limit switch where wet, dust, or corrosive environments may be present, Honeywell offers the LS2 Series of stainless steel limit switches. The limit switch body and actuating heads are cast from 316 stainless steel. These limit switches are available with a wide variety of actuating heads with a one-pole or two-pole snap-action double-break contact block. A threaded conduit is integral to the switch body with terminal screws for each wiring point on the contact block. Honeywell can provide the switches factory wired for reduced installation. The limit switches can also be factory wired with the limit switch body epoxy encapsulated, minimizing any dust or liquid migrating to the switch contacts. The limit switches can be front mounted with two through holes or rear mounted with two integral threaded holes from the back side.

As with the other HDLS Series of limit switches, the LS2 Series have UL, CSA, CE, UKCA and CCC certifications for global acceptance.

VALUE TO CUSTOMERS

- Harsh-duty stainless steel switch withstands many tough environments including dust, dirt, grime, heat, and washdown areas
- Variety of actuator heads and switch options
- Threaded conduit or factory wired
- Silver contacts or optional gold-plated contacts
- Made in the USA

APPLICATIONS

- Food processing plants
- Petrochemical plants
- Power generating plants
- Pulp and paper mills
- Shipboard and dockside locations
- Transportation hubs and facilities
- Water treatment and wastewater treatment facilities

DIFFERENTIATION

- Stainless steel housing designed for corrosive and adverse environments
- All-metal drive chain for consistent operating characteristics
- Three different electrical connectivity options; threaded conduit, factory wired, or factory wired with epoxy encapsulated body
- Side rotary head incorporates stainless steel shaft with bronze bearing for increased mechanical life of up to 50 million operations
- Wide selection of stainless steel levers to compliment the side rotary limit switch

PORTFOLIO

The heavy-duty HDLS stainless steel limit switches are a part of Honeywell's heavy duty HDLS Standard Series and the LSY-FP Fully Potted/Sealed Series. Honeywell has a comprehensive line that includes global, medium-duty, compact, hazardous area, and specialty limit switches. To view the entire product portfolio, click here.

FEATURES

- 316 Series stainless steel actuating heads and body with stainless steel screws
- Designed to IP 65/66/67 and NEMA 1, 3, 3R, 4, 4X, 6, 6P, 12 (without cable), and 13
- Diaphragm seal between head and body provides an extra degree of sealing
- Fluorocarbon seals standard for chemically harsh environments and/or higher temperature applications (121 °C/250 °F)
- Optional fluorosilicone seals for low temperature (-40 °C/-40 °F) applications
- Available with 1NC/1NO or 2NC/2NO double break contacts. Same polarity for each pole (Za)
- Side rotary head with center neutral or sequential switch design available
- Actuator heads can be field rotated to any of four positions 90° apart
- Side rotary heads are factory adjusted for CW and CCW actuation of the switch. Heads can be field adjusted for CW only or CCW only to actuate the switch
- CCC, CE, UKCA, CSA, and UL certifications for global acceptance

Honeywell

Downloaded from Arrow.com.

MICRO SWITCH HEAVY-DUTY LIMIT SWITCH (STAINLESS STEEL)
HDLS LS2 SERIES

TABLE 1. SPECIFICATIONS

Characteristic	Parameter
Product type	MICRO SWITCH heavy-duty limit switch, LS2 Stainless Steel Series
Certifications	UL, CSA, CE, UKCA, CCC
Reference standards	UL508, CSA C22.2 # 14, EN/IEC 60947-5-1, GB 14048.5
Housing material	316 Series stainless steel
Actuator heads	Side rotary Side rotary (maintained) Side rotary (sequential) Side roller plunger Top roller plunger Side rotary (low pretravel & low torque) Side rotary (center neutral) Side pin plunger Top pin plunger
Termination	0.5-14 NPT, 0.75-14 NPT Factory wired with or without epoxy encapsulated body; 1,5 mm^2 (16 AWG) cable SPDT with 5-conductor cable Ø12,7 mm [0.5 in] DPDT with 9-conductor cable Ø15,7 mm [0.62 in]
Contact options	1NC/1NO, 2NC/2NO, 2NC/2NO center neutral, 2NC/2NO sequential
Contact type	Snap action double break (form Za); same polarity each pole
Contact material	Silver alloy (standard), gold-plated (low-energy applications)
Utilization category	AC15, A600; DC13, R300
Rated operational voltage (Ue)	600 Vac, 250 Vdc
Rated operational current (Ie)	1.2 A, 0.1 A
Rated thermal current (Ith)	10 A, 2.5 A
Rated insulation voltage (Ui)	600 V
Rated impulse with-stand voltage (Uimp)	2500 V
Short circuit protection device (SCPD) type and rating	Class J fuse, rated 10 A, 600 V
Pollution degree	3
Sealing	Without cable: IP 65/66/67; NEMA 1, 3, 3R, 4, 4X, 6, 6P, 12, and 13 With cable; IP 65/66/67; NEMA 1, 3, 3R, 4, 6, 6P, and 13
Operating temperature	Refer to page 6, Table 5, for temperature range of limit switch with different seals or actuator heads Cable temp. range: -20 °C to 105 °C [-4 °F to 221 °F]
Vibration	10 g, conforming to IEC 60068-2-6
Shock (actuator not fitted)	50 g, conforming to IEC 60068-2-27

Downloaded from Arrow.com.

MICRO SWITCH HEAVY-DUTY LIMIT SWITCH (STAINLESS STEEL)
HDLS LS2 SERIES

TABLE 2. ELECTRICAL CHARACTERISTICS
10 A Thermal (Ith)
ac Volts; Pilot Duty; AC15, A600

Electrical Rating	Circuitry	Vac	Amps at 0.35 PF (make)	Amps at 0.35 PF (carry and break)
AC15, A600	SPDT, DPDT	120	60	6
		240	30	3
		480	15	1.5
		600	12	1.2

TABLE 3. ELECTRICAL CHARACTERISTICS
Pilot Duty; DC13, R300

Electrical rating	Circuitry	Vdc	Make & Break Amps Inductive	Make & Break Amps Resistive
DC13, R300	SPDT, DPDT	120	0.25	0.8
		240	0.15	0.4

TABLE 4. ELECTRICAL CHARACTERISTICS
MICRO SWITCH HDLS Series limit switches are capable of the following low voltage loads

Circuitry	Vdc	Amps Inductive	Amps Resistive
SPDT	24	10	10
DPDT	24	10	10

Figure 1. Product Nomenclature: Stainless Steel Version

LS2

Switch Type

LS2 Series Limit Switch with stainless steel housing, fluorocarbon seals, with or without factory wiring

A

Actuator Heads
(unless noted, all side rotary heads are CW/CCW)

A	Side rotary, momentary	**C**	Top pin plunger, momentary
D	Top roller plunger, momentary	**E**	Side pin plunger, momentary
F	Side roller plunger, momentary	**H**	Side rotary, momentary, low pretravel & torque
N	Side rotary, maintained, CW (reset), CCW (trip)	**L**	Side rotary, sequential, momentary (requires **4M** contact)
M	Side rotary, central neutral, momentary (requires **4N** contact)		

NOTE: Not all combinations of model codes are available. Please contact your local Honeywell provider for assistance.

4K

Contact Block & Termination

3E	1NC/1NO, gold-plated contacts, 0.5-14 NPT conduit
3K	1NC/1NO, 0.5-14 NPT conduit
4K	1NC/1NO, 0.75-14 NPT conduit
4L	2NC/2NO, 0.75-14 NPT conduit
4M	2NC/2NO, sequential, 0.75-14 NPT conduit
4N	2NC/2NO, center neutral, 0.75-14 NPT conduit

C

Opt. Factory Wiring
(Requires 0.75-14 NPT conduit)

C	5-conductor STOW-A cable, 1,8 m [6.0 ft] for 1NC/1NO contact with ground
PC	5-conductor STOOW-A cable, 6,1 m [20.0 ft] for 1NC/1NO contact with ground
M	9-conductor STOOW-A cable, 1,8 m [6.0 ft] for 2NC/2NO contact with ground

Downloaded from Arrow.com.

MICRO SWITCH HEAVY-DUTY LIMIT SWITCH (STAINLESS STEEL)
HDLS LS2 SERIES

Figure 2. Product Nomenclature: Low Temperature Versions

LS2 — Switch Type

LS2 Series Limit Switch with stainless steel housing, with low temp. seals, with or without factory wiring

M — Actuator Heads (unless noted, all side rotary heads are CW/CCW)

A	Side rotary, momentary	**D**	Top roller plunger, momentary
E	Side pin plunger, momentary	**N**	Side rotary, maintained, CW (reset), CCW (trip)
M	Side rotary, central neutral, momentary (requires **4N** contact)		

NOTE: Not all combinations of model codes are available. Please contact your local Honeywell provider for assistance.

B — Seals

B	Fluorosilicone seals for low temp. applications

4N — Contact Block & Termination

4K	1NC/1NO, 0.75-14 NPT conduit
4L	2NC/2NO, 0.75-14 NPT conduit
4N	2NC/2NO, center neutral, 0.75-14 NPT conduit

M — Opt. Factory Wiring (Requires 0.75-14 NPT conduit)

C	5-conductor STOW-A cable, 1,8 m [6.0 ft] for 1NC/1NO contact with ground
M	9-conductor STOOW-A cable, 1,8 m [6.0 ft] for 2NC/2NO contact with ground

Figure 3. Product Nomenclature: Factory Sealed Versions

LS2 — Switch Type

LS2 Series Limit Switch with stainless steel housing, fluorocarbon seals, and factory sealed

A — Actuator Heads (unless noted, all side rotary heads are CW/CCW)

A	Side rotary, momentary	**C**	Top pin plunger, momentary
D	Top roller plunger, momentary	**E**	Side pin plunger, momentary
F	Side roller plunger, momentary	**H**	Side rotary, momentary, low pretravel & torque
N	Side rotary, maintained, CW (reset), CCW (trip)	**L**	Side rotary, sequential, momentary (requires **4M** contact)
M	Side rotary, central neutral, momentary (requires **4N** contact)		

NOTE: Not all combinations of model codes are available. Please contact your local Honeywell provider for assistance.

4L — Contact Block & Termination

4K	1NC/1NO, 0.75-14 NPT conduit
4L	2NC/2NO, 0.75-14 NPT conduit
4M	2NC/2NO, sequential, 0.75-14 NPT conduit
4N	2NC/2NO, center neutral, 0.75-14 NPT conduit

X-FP — Factory Sealed

P-FP	5-conductor STOOW-A cable, 3,6 m [12.0 ft] for 1NC/1NO contact with ground
X-FP	9-conductor STOOW-A cable, 3,6 m [12.0 ft] for 2NC/2NO contact with ground

Downloaded from Arrow.com.

MICRO SWITCH HEAVY-DUTY LIMIT SWITCH (STAINLESS STEEL)
HDLS LS2 SERIES

MICRO SWITCH HDLS SERIES ACTUATOR HEADS

SIDE ROTARY: Available levers provide greater versatility. Actuating heads may be indexed in any of four positions, 90° apart. All are momentary action except maintained head (LSN Series).

	LSA - Standard: 15° maximum pretravel, 5° (single pole) and 7° (double pole) maximum differential travel, 60° minimum overtravel.
LSN - Maintained contact: Maintained on counterclockwise rotation and reset on clockwise rotation, and vice versa.	
LSH - Low torque, low differential travel: Features low operating torque and narrow differential travel. 68° minimum overtravel.	
LSL - Sequence action: Delayed action between operation of two poles. 48° minimum overtravel.	
LSM - Center neutral: One pole operates on the clockwise rotation, and the other pole on the counterclockwise rotation. 53° minimum overtravel.	

TOP PLUNGERS: Available with 4,83 mm [0.19 in] minimum overtravel. Top pin plungers are offered in pin plunger, an adjustable plunger, and a roller plunger.

	LSC - Top pin plunger: A stainless steel plunger for in-line actuating motion. A boot seal on the plunger and a seal between the actuator head and housing. Momentary action.
	LSD - Top roller plunger: A stainless steel roller and plunger that is adjustable to 90° angles to accept cam or slide operation from any of two directions. Boot seal on the plunger and a seal between the actuator head and housing. Momentary action

SIDE PLUNGERS: Available with 4,83 mm [0.19 in] minimum overtravel. Side plungers are offered in a pin plunger and a roller plunger.

	LS2E - Side pin plunger: A stainless steel plunger for actuating motion inline with the plunger travel. Actuating head may be indexed in any of four positions, 90° apart. A boot seal on the plunger and a seal between the head and housing. Momentary action.
	LS2F - Side roller plunger: With a stainless steel roller pluger, this switch fits in close quarters under cams and slides. The head may be indexed in any of four positions, 90° apart. **The roller can be turned vertical or horizontal to the switch**. Seals are same as side pin plunger. Momentary action.

Downloaded from Arrow.com.

MICRO SWITCH HEAVY-DUTY LIMIT SWITCH (STAINLESS STEEL)
HDLS LS2 SERIES

TABLE 5. TEMPERATURE LIMITS	LS2 Stainless Steel (Fluorocarbon Sealed)			Low Temperature LS2 Stainless Steel (Fluorosilicone Sealed): Y_B			
	Low Limit		High Limit	Low Limit		High Limit	
	12°C [10°F]	-1°C [30°F]	121°C [250°F]	-40°C [-40°F]	-29°C [-20°F]	93°C [200 °F]	121°C [250°F]
LSA - Side Rotary Momentary	X		X	X			X
LSC - Top Plain Plunger	X		X	X		X	
LSD - Top Roller Plunger	X		X	X		X	
LSE - Side Plain Plunger	X		X	X		X	
LSF - Side Roller Plunger	X		X	X		X	
LSH - Side Rotary, Low PT, Low Torque		X	X		X		X
LSL - Side Rotary, Sequence	X		X	X			X
LSM - Side Rotary, Center Neutral	X	X	X	X			X
LSN - Side Rotary, Maintained		X	X		X		X

NOTE: The pre-wired cable or mini-style connector have a temperature rating of -20 °C to 105 °C [-4 °F to 221 °F]. When temperature extremes are involved, the application should be reviewed to ensure cable or connector suitability.

Downloaded from Arrow.com.

MICRO SWITCH HEAVY-DUTY LIMIT SWITCH (STAINLESS STEEL)
HDLS LS2 SERIES

WIRING DIAGRAMS

Figure 5. 3E, 3K, 4K

1NC/1NO

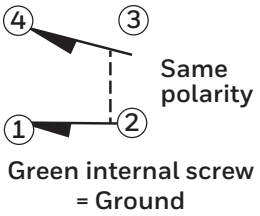

Figure 6. 4KC, 4KPC, 4KP-FP

1NC/1NO with 5-conductor cable

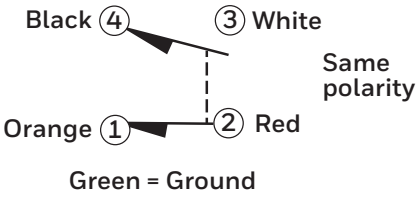

Figure 7. 4L

2NC/2NO

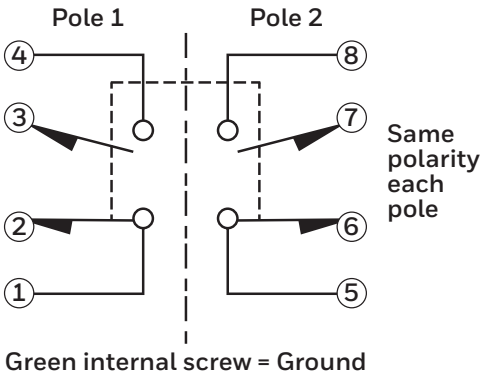

Figure 8. 4LM, 4LX-FP

2NC/2NO with 9-conductor cable

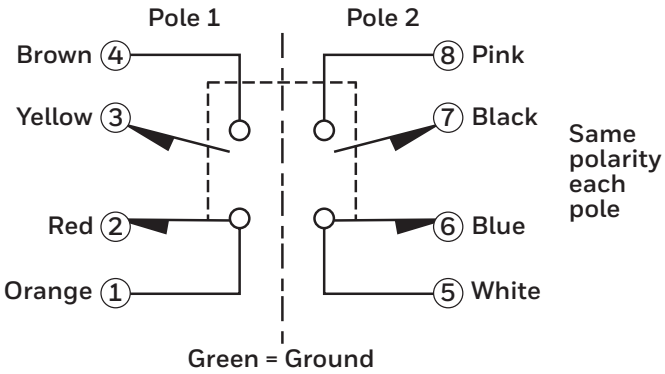

Figure 9. 4M

2NC/2NO sequential

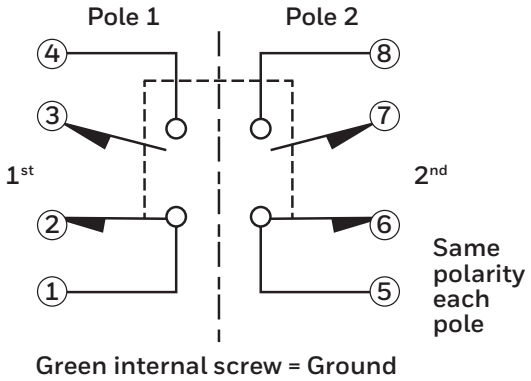

Figure 10. 4MM, 4MX-FP

2NC/2NO sequential with 9-conductor cable

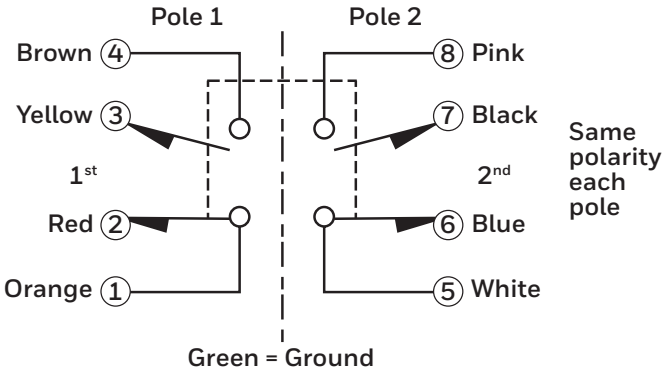

Figure 11. 4N

2NC/2NO center neutral

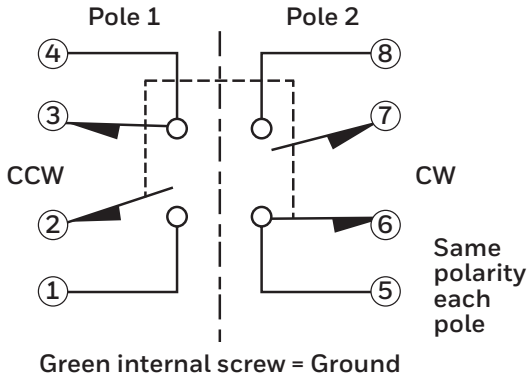

Figure 12. 4NM, 4NX-FP

2NC/2NO center neutral with 9-conductor cable

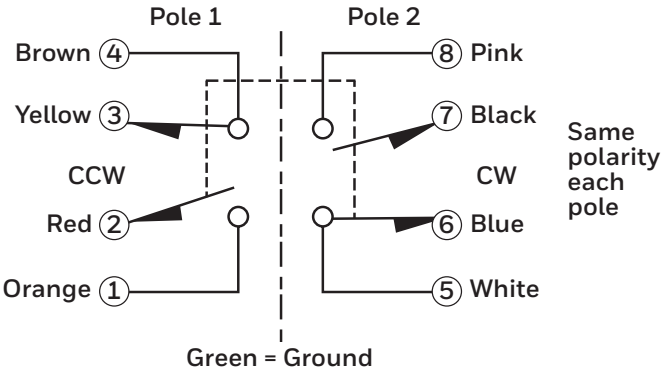

Note: Wiring diagrams for limit switches with maintained contacts are illustrated with lever/shaft in CW position.

Downloaded from Arrow.com.

MICRO SWITCH HEAVY-DUTY LIMIT SWITCH (STAINLESS STEEL)
HDLS LS2 SERIES

ELECTROMECHANICAL SWITCHES
Definitions below explain the meaning of operating characteristics. Characteristics shown in tables were chosen as most significant. They are taken at normal room temperature and humidity. These may vary as temperature and humidity conditions differ. Sketches show how characteristics are measured for in-line plunger actuation and rotary actuation.

Linear dimensions for in-line actuation are from top of plunger to a reference line, usually the center of the mounting holes. Rotary actuated HDLS limit switches have the characteristics in degrees of angular rotation.

Differential Travel (D.T.) – Plunger or actuator travel from point where contacts "snap-over" to point where they "snapback."

Free Position (F.P.) – Position of switch plunger or actuator when no external force is applied (other than gravity).

Full Overtravel Force – Force required to attain full overtravel of actuator.

Operating Position (O.P.) – Position of switch plunger or actuator at which point contacts snap from normal to operated position. Note that in the case of flexible or adjustable actuators, the operating position is measured from the end of the lever or its maximum length. Location of operating position measurement shown on mounting dimension drawings.

Operating Force (O.F.) – Amount of force applied to switch plunger or actuator to cause contact "snap-over." Note in the case of adjustable actuators, the force is measured from the maximum length position of the lever.

Overtravel (O.T.) – Plunger or actuator travel safely available beyond operating position.

Pretravel (P.T.) – Distance or angle traveled in moving plunger or actuator from free position to operating position.

Release Force (R.F.) – Amount of force still applied to switch plunger or actuator at moment contacts snap from operated position to unoperated position.

Total Travel (T.T.) – Distance from actuator free position to overtravel limit position.

ROTARY ACTUATION

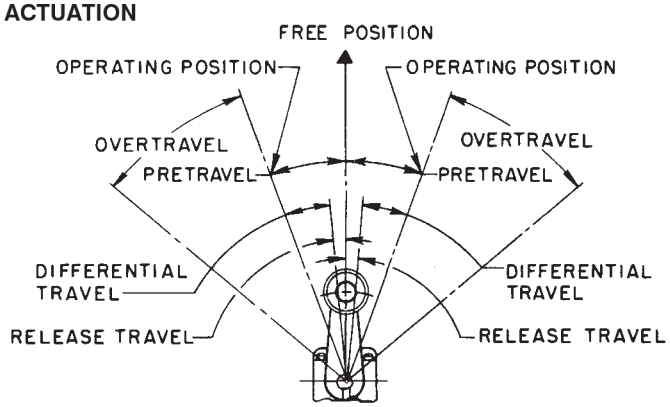

IN-LINE PLUNGER ACTUATION

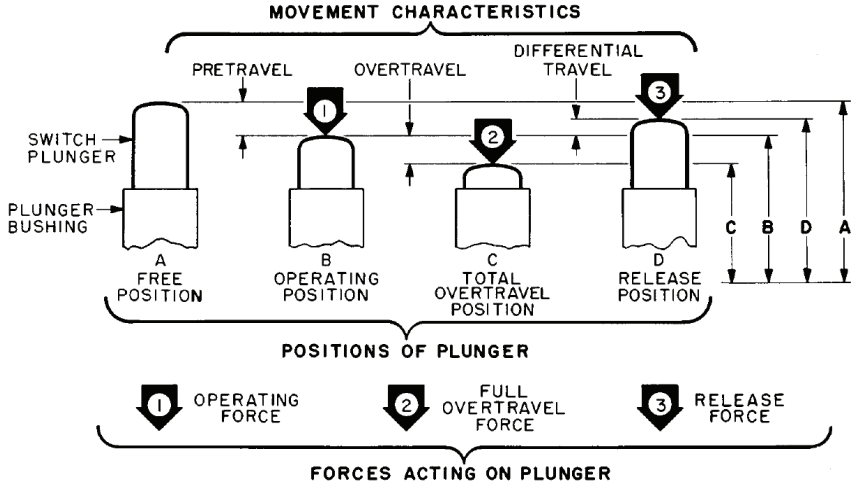

Bar Chart Description (Inline and Rotary)

NC = Normally closed contact(s)
NO = Normally open contact (s)

■ contact closed
□ contact open

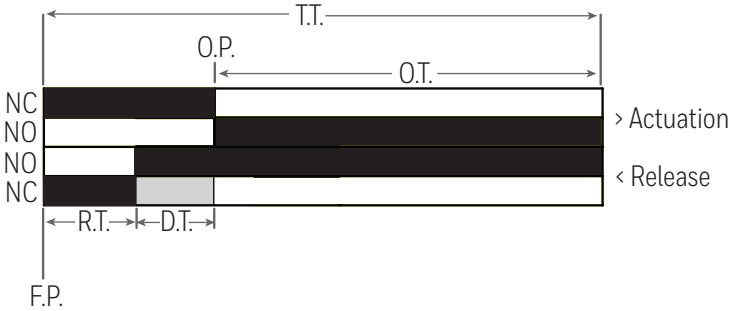

Downloaded from Arrow.com.

MICRO SWITCH HEAVY-DUTY LIMIT SWITCH (STAINLESS STEEL)
HDLS LS2 SERIES

TABLE 6. ORDER GUIDE: SIDE ROTARY

Side Rotary Catalog Listings	Actuator Head Type	Contact Arrangement (snap-action)	Bar Chart (degrees) ■ Contact closed ■ Contact open	Electrical Termination	Wiring Diagram (page 7)	Note
LS2A4K	Side rotary, standard pretravel	1NC/1NO	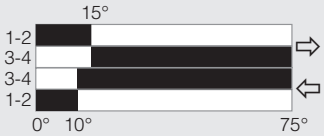 Pretravel • 15° max. Diff. travel (SPDT) • 5° max. Diff travel (DPDT) • 7° max. Overtravel • 60° min. Oper. torque • 0,45 Nm [4 in-lb] max.	0.75-14 NPT conduit with screw termination	Figure 5	Standard switch construction
LS2YAB4K	Side rotary, standard pretravel	1NC/1NO		0.75-14 NPT conduit with screw termination	Figure 5	Low temp. switch construction
LS2A3E	Side rotary, standard pretravel	1NC/1NO w/ gold-plated contacts		0.5-14 NPT conduit with screw termination	Figure 5	Standard switch construction
LS2A4KC	Side rotary, standard pretravel	1NC/1NO		5 conductor STOW-A cable, 1,8M [6.0 ft.]	Figure 6	Standard switch construction, factory wired
LS2A4KPC	Side rotary, standard pretravel	1NC/1NO		5 conductor STOOW-A cable, 6,1 M [20.0 ft.]	Figure 6	Standard switch construction, factory wired
LS2A4L	Side rotary, standard pretravel	2NC/2NO	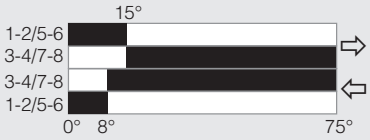	0.75-14 NPT conduit with screw termination	Figure 7	Standard switch construction
LS2YAB4L	Side rotary, standard pretravel	2NC/2NO		0.75-14 NPT conduit with screw termination	Figure 7	Low temp. switch construction
LS2A4LX-FP	Side rotary, standard pretravel	2NC/2NO		9 conductor STOOW-A cable, 3,6M [12.0 ft.]	Figure 8	Standard switch construction, factory wired and sealed
LS2H3K	Side rotary, low differential and low torque	1NC/1NO	Pretravel • 9° max. Diff. travel (SPDT) • 3° max. Diff. travel (DPDT) • 4° max. Overtravel • 66° min. Oper. torque • 0,19 Nm [1.7 in-lb] max.	0.5-14 NPT conduit with screw termination	Figure 5	Standard switch construction
LS2H4K	Side rotary, low differential and low torque	1NC/1NO		0.75-14 NPT conduit with screw termination	Figure 5	Standard switch construction
LS2H4L	Side rotary, low differential and low torque	2NC/2NO	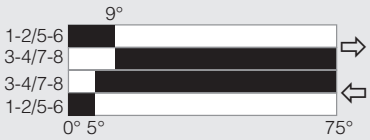	0.75-14 NPT conduit with screw termination	Figure 7	Standard switch construction
LS2M4N	Side rotary, center neutral	2NC/2NO	Pretravel • 18° max. Diff. travel • 10° max. Overtravel • 57° min. Oper. torque • 0,45 Nm [4 in-lb] max.	0.75-14 NPT conduit with screw termination	Figure 11	Standard switch construction
LS2YMB4N	Side rotary, center neutral	2NC/2NO		0.75-14 NPT conduit with screw termination	Figure 11	Low temp. switch construction
LS2M4NM	Side rotary, center neutral	2NC/2NO	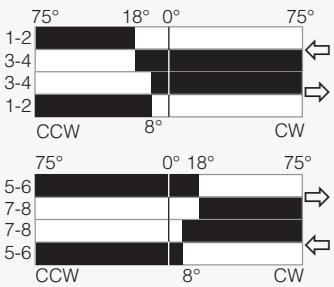	9 conductor STOW-A cable, 1,8M [6.0 ft.]	Figure 12	Standard switch construction, factory wired

Downloaded from Arrow.com.

MICRO SWITCH HEAVY-DUTY LIMIT SWITCH (STAINLESS STEEL)
HDLS LS2 SERIES

TABLE 6. ORDER GUIDE: SIDE ROTARY

Side Rotary Catalog Listings	Actuator Head Type	Contact Arrangement (snap-action)	Bar Chart (degrees) ■ Contact closed ■ Contact open	Electrical Termination	Wiring Diagram (page 7)	Note
LS2N3K	Side rotary, maintained	1NC/1NO	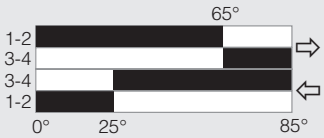 Pretravel • 65° max. Diff. travel • 40° max. Overtravel • 20° min. Oper. torque • 0,45 Nm [4 in-lb] max. 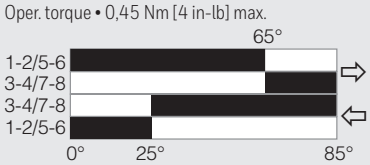	0.5-14 NPT conduit with screw termination	Figure 5	Standard switch construction

Downloaded from Arrow.com.

MICRO SWITCH HEAVY-DUTY LIMIT SWITCH (STAINLESS STEEL)
HDLS LS2 SERIES

TABLE 7. ORDER GUIDE: PLUNGER

Top and Side Plunger Catalog Listings	Actuator Head Type	Contact Arrange-ment (snap-action)	Bar Chart (mm [in]) ■ Contact closed ■ Contact open	Electrical Termination	Wiring Diagram (page 7)	Note
LS2YCB4K	Top pin plunger	1NC/1NO	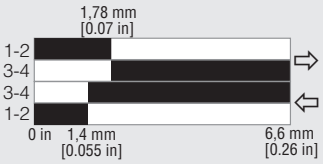 Pretravel • 1,78 mm [0.07 in] max. Diff. travel (SPDT) • 0,38 mm [0.015 in] max. Diff travel (DPDT) • 0,51 mm [0.020 in] max. Overtravel • 4,83 mm [0.190 in] min. Oper. point • 45,9 mm [1.81 in] Oper. force • 17,8 N [4 lb] max.	0.75-14 NPT conduit with screw termination	Figure 5	Low temp. switch construction
LS2C4L	Top pin plunger	2NC/2NO	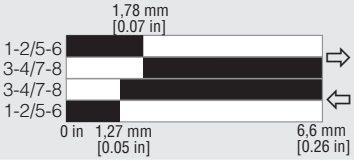	0.75-14 NPT conduit with screw termination	Figure 7	Standard switch construction
LS2D4K	Top roller plunger	1NC/1NO	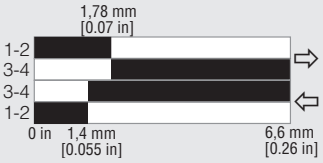 Pretravel • 1,78 mm [0.07 in] max. Diff. travel (SPDT) • 0,38 mm [0.015 in] max. Diff travel (DPDT) • 0,51 mm [0.020 in] max. Overtravel • 4,83 mm [0.190 in] min. Oper. point • 55,9 mm [2.20 in] Oper. force • 17,8 N [4 lb] max.	0.75-14 NPT conduit with screw termination	Figure 5	Standard switch construction
LS2YDB4K	Top roller plunger	1NC/1NO		0.75-14 NPT conduit with screw termination	Figure 5	Low temp. switch construction
LS2D4KC	Top roller plunger	1NC/1NO		5 conductor STOW-A cable, 1,8M [6.0 ft.]	Figure 6	Standard switch construction, factory wired
LS2D4L	Top roller plunger	2NC/2NO	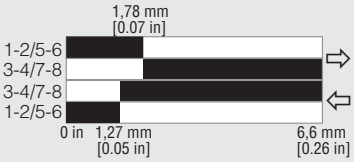	0.75-14 NPT conduit with screw termination	Figure 7	Standard switch construction
LS2D4LM	Top roller plunger	2NC/2NO		9 conductor STOW-A cable, 1,8M [6.0 ft.]	Figure 8	Standard switch construction, factory wired
LS2E4K	Side pin plunger	1NC/1NO	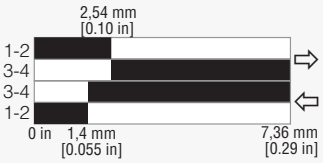 Pretravel • 2,54 mm [0.10 in] max. Diff. travel • 1,14 mm [0.045 in] max. Overtravel • 4,83 mm [0.190 in] min. Oper. point • 33,02 ±0,76 mm [1.30 ±0.030 in] Oper. force • 26,79 N [6 lb] max.	0.75-14 NPT conduit with screw termination	Figure 5	Standard switch construction
LS2YEB4K	Side pin plunger	1NC/1NO		0.75-14 NPT conduit with screw termination	Figure 5	Low temp. switch construction
LS2E4L	Side pin plunger	2NC/2NO	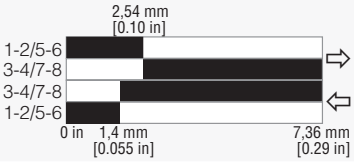	0.75-14 NPT conduit with screw termination	Figure 7	Standard switch construction

Downloaded from Arrow.com.

MICRO SWITCH HEAVY-DUTY LIMIT SWITCH (STAINLESS STEEL)
HDLS LS2 SERIES

TABLE 7. ORDER GUIDE: PLUNGER

Top and Side Plunger Catalog Listings	Actuator Head Type	Contact Arrange-ment (snap-action)	Bar Chart (mm [in]) ■ Contact closed ■ Contact open	Electrical Termination	Wiring Diagram (page 7)	Note
LS2F4K	Side roller plunger	1NC/1NO	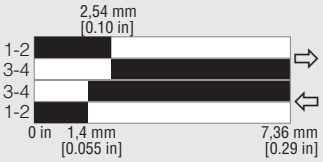 Pretravel • 2,54 mm [0.10 in] max. Diff. travel • 1,14 mm [0.045 in] max. Overtravel • 4,83 mm [0.190 in] min. Oper. point • 44,07 ±1,02 mm [1.735 in ±0.040] Oper. force • 26,79 N [6 lb] max.	0.75-14 NPT conduit with screw termination	Figure 5	Standard switch construction
LS2F4L	Side roller plunger	2NC/2NO	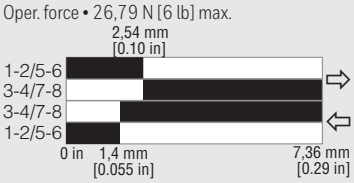	0.75-14 NPT conduit with screw termination	Figure 7	Standard switch construction

Downloaded from Arrow.com.

MICRO SWITCH HEAVY-DUTY LIMIT SWITCH (STAINLESS STEEL)
HDLS LS2 SERIES

TABLE 8. LS2 SERIES STAINLESS STEEL LEVERS

	Catalog Listing	Material	Rod/Roller Dia. mm [in]	Rod/Roller Width mm [in]	Roller Mounting
Fixed 38,1 mm [1.5 in] radius					
LS2Z51A	**LS2Z51A**	Nylon	19,0 [0.75]	6,35 [0.25]	Front
	LS2Z51B	Stainless steel	19,0 [0.75]	6,35 [0.25]	Front
	LS2Z51C	Nylon	19,0 [0.75]	6,35 [0.25]	Back
	LS2Z51D	Stainless steel	19,0 [0.75]	6,35 [0.25]	Back
	LS2Z51E	Bronze	19,0 [0.75]	6,35 [0.25]	Front
	LS2Z51F	Bronze	19,0 [0.75]	6,35 [0.25]	Back
	LS2Z51R	Nylon	40,4 [1.59]	6,35 [0.25]	Front
Adjustable 38,1 mm to 89,0 mm [1.5 in to 3.5 in] radius					
LS2Z52A	**LS2Z52A**	Nylon	19,0 [0.75]	6,35 [0.25]	Back
	LS2Z52B	Stainless steel	19,0 [0.75]	6,35 [0.25]	Back
	LS2Z52C	Nylon	19,0 [0.75]	6,35 [0.25]	Front
	LS2Z52D	Stainless steel	19,0 [0.75]	6,35 [0.25]	Front
	LS2Z52E	Bronze	19,0 [0.75]	6,35 [0.25]	Front
	LS2Z52F	Bronze	19,0 [0.75]	6,35 [0.25]	Back
	LS2Z52K	Nylon	38,1 [1.50]	6,35 [0.25]	Front
Adjustable Rod					
LS2Z54N	**LS2Z54N**	Stainless steel	3,2 [0.125]	330 [13.0]	n/a
	LS2Z54U	Aluminum	3,2 [0.125]	203 [8.0]	n/a

Downloaded from Arrow.com.

MICRO SWITCH HDLS Side Rotary Levers' Cam Tracking

Levers for side and top rotary switches are normally ordered as separate catalog listings. They also may be ordered by including a suffix to the switch catalog listing (see nomenclature tree in this document) and adding the lever price.

Figure 13. LS2Z51 Type Levers Cam Tracking

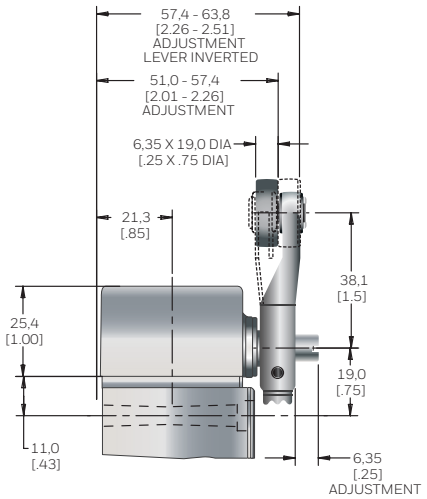

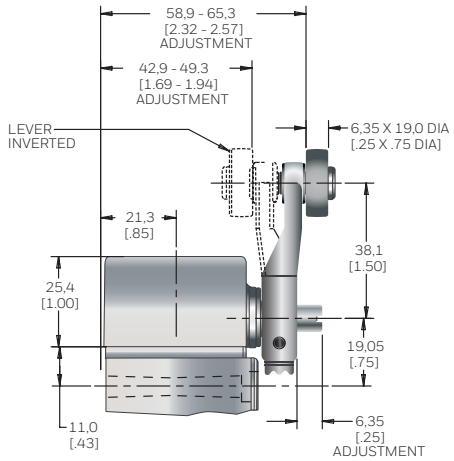

Figure 14. LS2Z52 Type Levers Cam Tracking

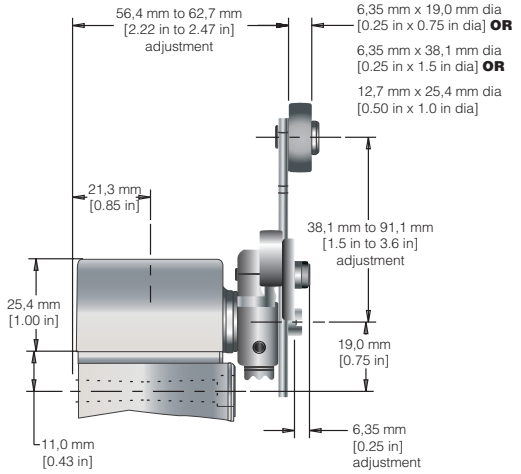

Figure 15. LS2Z54 Type Levers Cam Tracking

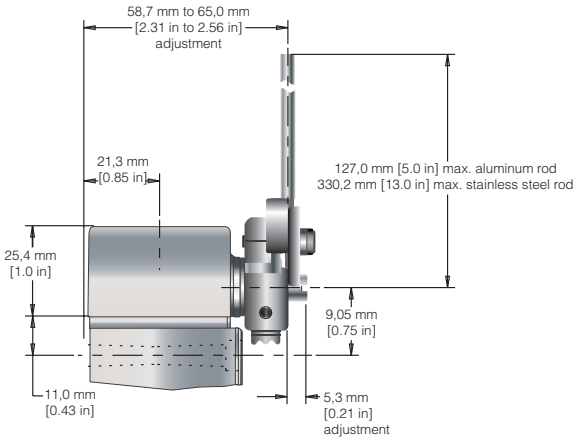

Downloaded from Arrow.com.

MICRO SWITCH HEAVY-DUTY LIMIT SWITCH (STAINLESS STEEL)
HDLS LS2 SERIES

Figure 16. LS2 Series Side Rotary (mm [in])

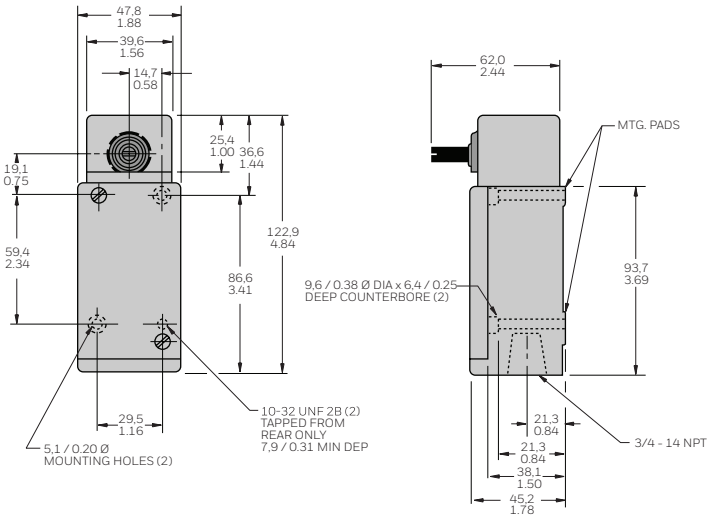

Figure 17. LS2 Series Side Rotary with Cable (mm [in])

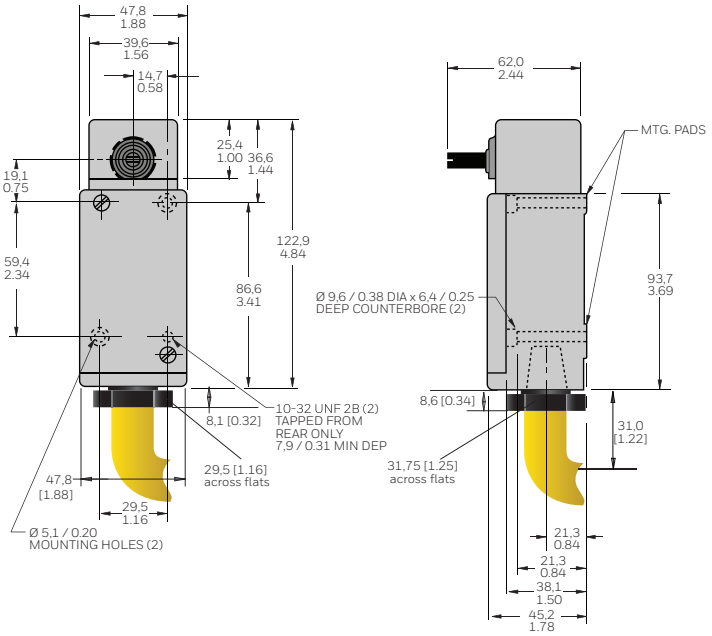

Figure 18. LS2 Series Top Pin Plunger (mm [in])

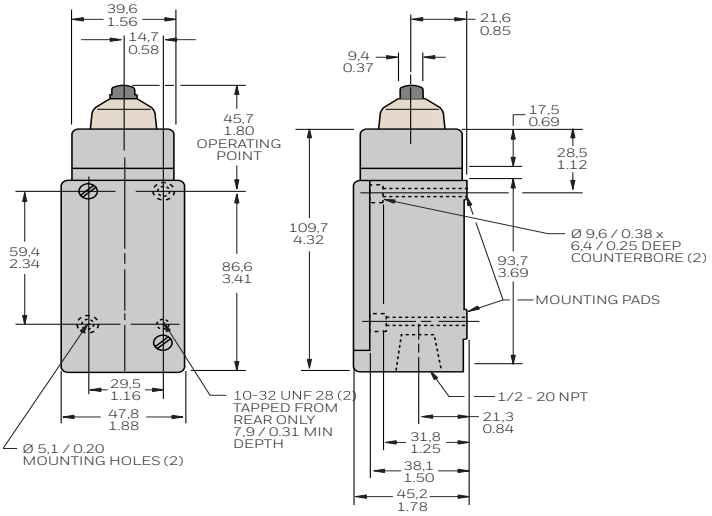

Figure 19. LS2 Series Top Roller Plunger (mm [in])

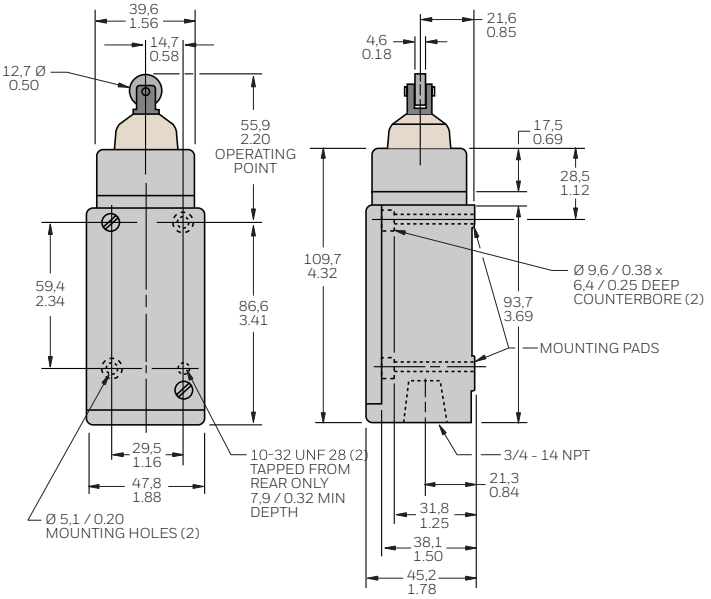

Downloaded from Arrow.com.

MICRO SWITCH HEAVY-DUTY LIMIT SWITCH (STAINLESS STEEL)
HDLS LS2 SERIES

Figure 20. LS2 Series Side Plunger (mm [in])

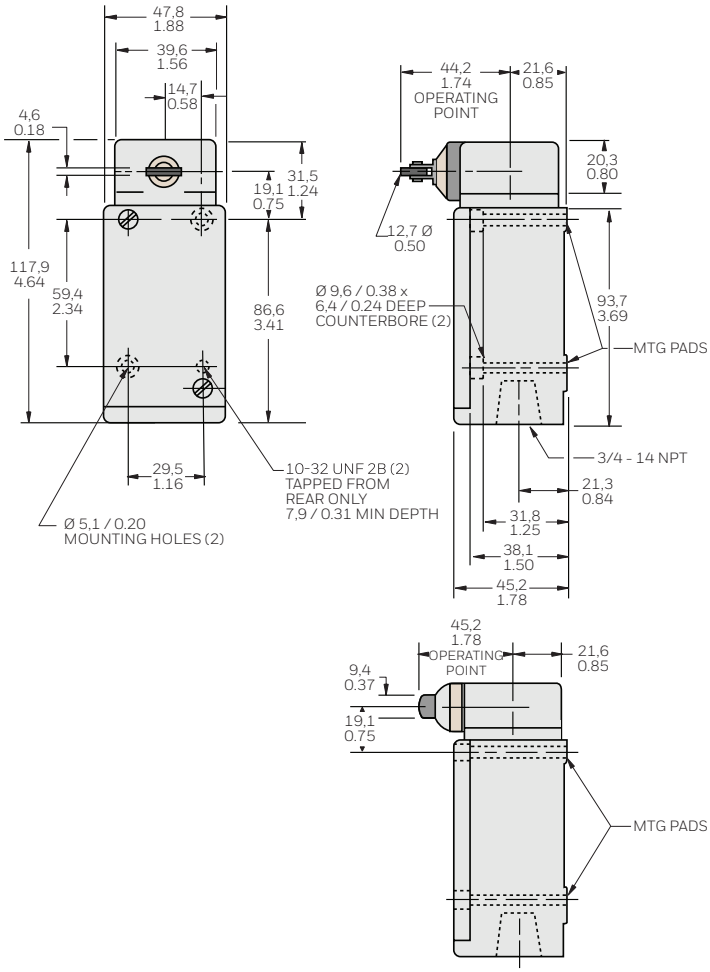

TABLE 9. REPLACEMENT ACTUATING HEADS FOR LS2 LIMIT SWITCHES

Catalog Listing	Actuating Head Type	Description
LS2Z1A	Side rotary, standard force and travel	Replacement head for the LS2A Series side rotary limit switch with fluorocarbon seals
LS2Z1AB	Side rotary, standard force and travel with low temp. seals	Replacement head for the LS2YAB Series side rotary limit switch with fluorosilicone seals
LS2Z1H	Side rotary, low pretravel and low torque	Replacement head for the LS2H Series side rotary limit switch with fluorocarbon seals
LS2Z1N	Side rotary, maintained	Replacement head for the LS2N Series side rotary maintained limit switch with fluorocarbon seals
LS2Z1CB	Top pin plunger, with low temp. seals	Replacement head for the LS2YCB Series top pin plunger limit switch with fluorosilicone seals
LS2Z1D	Top roller plunger	Replacement head for the LS2D Series top roller plunger limit switch with fluorocarbon seals
LS2Z1DB	Top roller plunger, with low temp. seals	Replacement head for the LS2YDB Series top roller plunger limit switch with fluorosilicone seals
LS2Z1E	Side pin plunger	Replacement head for the LS2E Series side pin plunger limit switch with fluorocarbon seals
LS2Z1F	Side roller plunger	Replacement head for the LS2F Series side roller plunger limit switch with fluorocarbon seals

Catalog Listing	Contact Block Type	Description
LSZ3K	1NC-1NO	Replacement contact block with 1NC/1NO (single-pole) contact
LSZ3L	2NC-2NO	Replacement contact block with 2NC/2NO (double-pole) contact,not for use for center neutral or sequential limit switches
LSZ3M	2NC-2NO special	Replacement contact block with 2NC/2NO (double-pole) contact for center neutral or sequential limit switches

Downloaded from Arrow.com.

WARRANTY/REMEDY

Honeywell warrants goods of its manufacture as being free of defective materials and faulty workmanship during the applicable warranty period. Honeywell's standard product warranty applies unless agreed to otherwise by Honeywell in writing; please refer to your order acknowledgment or consult your local sales office for specific warranty details. If warranted goods are returned to Honeywell during the period of coverage, Honeywell will repair or replace, at its option, without charge those items that Honeywell, in its sole discretion, finds defective. The foregoing is buyer's sole remedy and is in lieu of all other warranties, expressed or implied, including those of merchantability and fitness for a particular purpose. In no event shall Honeywell be liable for consequential, special, or indirect damages.

While Honeywell may provide application assistance personally, through our literature and the Honeywell web site, it is buyer's sole responsibility to determine the suitability of the product in the application.

Specifications may change without notice. The information we supply is believed to be accurate and reliable as of this writing. However, Honeywell assumes no responsibility for its use.

⚠WARNING
RISK OF SERIOUS PERSONAL INJURY

DO NOT USE the HDLS Series products as emergency stop devices, in machine safety interlock applications, or in any application where the switch is intended to shut down, or prevent the start of, equipment that could cause personal injury. If your application requires an electrical circuit to be open for safety reasons, the user should select a product with positive-opening contacts and consider whether redundancies may be warranted in your application. If you have any questions about the use of a product in your application, please contact Honeywell Customer Support at:

- +1 302 613 4491
- sps.honeywell.com/ast
- https://sensing.honeywell.com/contact-support-form

Failure to comply with these instructions could result in death or serious injury.

⚠ WARNING
MISUSE OF DOCUMENTATION

- The information presented in this product sheet is for reference only. Do not use this document as a product installation guide.
- Complete installation, operation, and maintenance information is provided in the instructions supplied with each product.

Failure to comply with these instructions could result in death or serious injury.

For more information

Honeywell Sensing & Safety Technologies services its customers through a worldwide network of sales offices and distributors. For application assistance, current specifications, pricing or the nearest Authorized Distributor, visit our website or call:

USA/Canada	+1 302 613 4491
Latin America	+1 305 805 8188
Europe	+44 1344 238258
Japan	+81 (0) 3-6730-7152
Singapore	+65 6355 2828
Greater China	+86 4006396841

Honeywell Sensing & Safety Technologies
830 East Arapaho Road
Richardson, TX 75081
www.honeywell.com

002426-3-EN | 3 | 12/23
© 2023 Honeywell International Inc. All rights reserved.

Honeywell

Downloaded from Arrow.com.