Ordering number : ENA1646A

ATP101

P-Channel Power MOSFET
−30V, −25A, 30mΩ, Single ATPAK

ON Semiconductor®

http://onsemi.com

Features

- Low ON-resistance
- Slim package
- Halogen free compliance
- Large current
- 4.5V drive
- Protection diode in

Specifications

Absolute Maximum Ratings at Ta=25°C

Parameter	Symbol	Conditions	Ratings	Unit
Drain-to-Source Voltage	V_{DSS}		−30	V
Gate-to-Source Voltage	V_{GSS}		±20	V
Drain Current (DC)	I_D		−25	A
Drain Current (PW≤10μs)	I_{DP}	PW≤10μs, duty cycle≤1%	−75	A
Allowable Power Dissipation	P_D	Tc=25°C	30	W
Channel Temperature	Tch		150	°C
Storage Temperature	Tstg		−55 to +150	°C
Avalanche Energy (Single Pulse) *1	E_{AS}		25	mJ
Avalanche Current *2	I_{AV}		−13	A

Note :*1 V_{DD}=−10V, L=200μH, I_{AV}=−13A
*2 L≤200μH, Single pulse

Stresses exceeding Maximum Ratings may damage the device. Maximum Ratings are stress ratings only. Functional operation above the Recommended Operating Conditions is not implied. Extended exposure to stresses above the Recommended Operating Conditions may affect device reliability.

Package Dimensions

unit : mm (typ)
7057-001

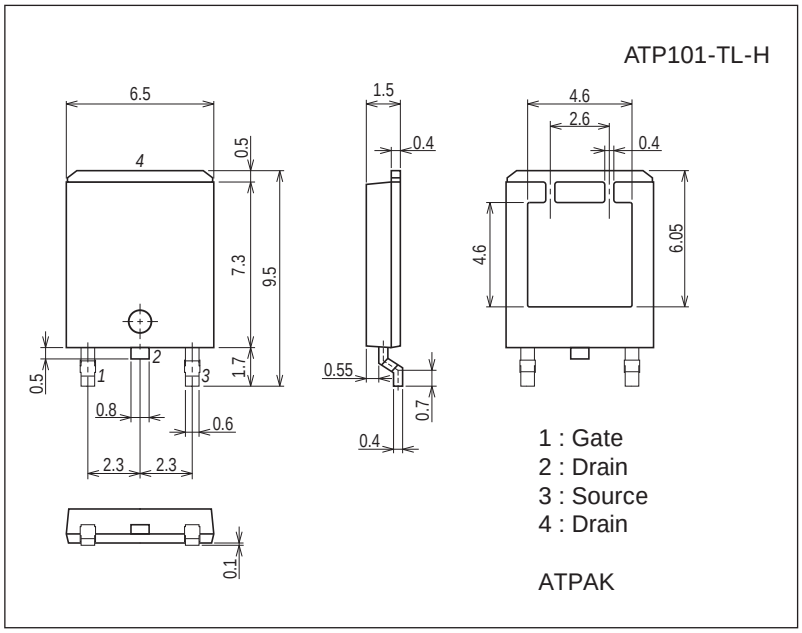

Product & Package Information

- Package : ATPAK
- JEITA, JEDEC : -
- Minimum Packing Quantity : 3,000 pcs./reel

Packing Type: TL

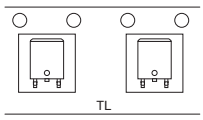

Marking

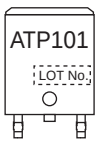

Electrical Connection

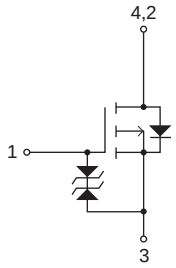

Downloaded from Arrow.com.

Electrical Characteristics at Ta=25°C

Parameter	Symbol	Conditions	Ratings			Unit
			min	typ	max	
Drain-to-Source Breakdown Voltage	$V_{(BR)DSS}$	I_D=−1mA, V_{GS}=0V	−30			V
Zero-Gate Voltage Drain Current	I_{DSS}	V_{DS}=−30V, V_{GS}=0V			−1	μA
Gate-to-Source Leakage Current	I_{GSS}	V_{GS}=±16V, V_{DS}=0V			±10	μA
Cutoff Voltage	V_{GS}(off)	V_{DS}=−10V, I_D=−1mA	−1.2		−2.6	V
Forward Transfer Admittance	| yfs |	V_{DS}=−10V, I_D=−13A		17		S
Static Drain-to-Source On-State Resistance	R_{DS}(on)1	I_D=−13A, V_{GS}=−10V		23	30	mΩ
	R_{DS}(on)2	I_D=−7A, V_{GS}=−4.5V		36	51	mΩ
Input Capacitance	Ciss	V_{DS}=−10V, f=1MHz		875		pF
Output Capacitance	Coss			220		pF
Reverse Transfer Capacitance	Crss			155		pF
Turn-ON Delay Time	t_d(on)	See specified Test Circuit.		9.2		ns
Rise Time	t_r			70		ns
Turn-OFF Delay Time	t_d(off)			80		ns
Fall Time	t_f			70		ns
Total Gate Charge	Qg	V_{DS}=−15V, V_{GS}=−10V, I_D=−25A		18.5		nC
Gate-to-Source Charge	Qgs			3.2		nC
Gate-to-Drain “Miller” Charge	Qgd			4.0		nC
Diode Forward Voltage	V_{SD}	I_S=−25A, V_{GS}=0V		−0.99	−1.5	V

Switching Time Test Circuit

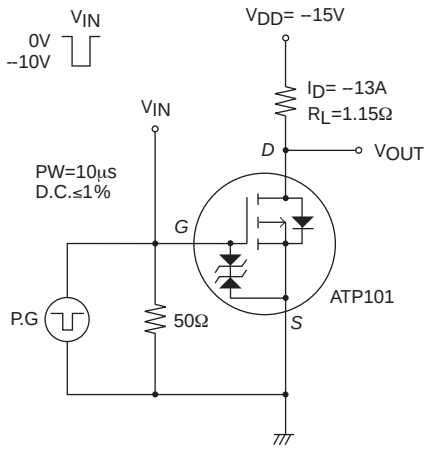

Ordering Information

Device	Package	Shipping	memo
ATP101-TL-H	ATPAK	3,000pcs./reel	Pb Free and Halogen Free

Downloaded from Arrow.com.

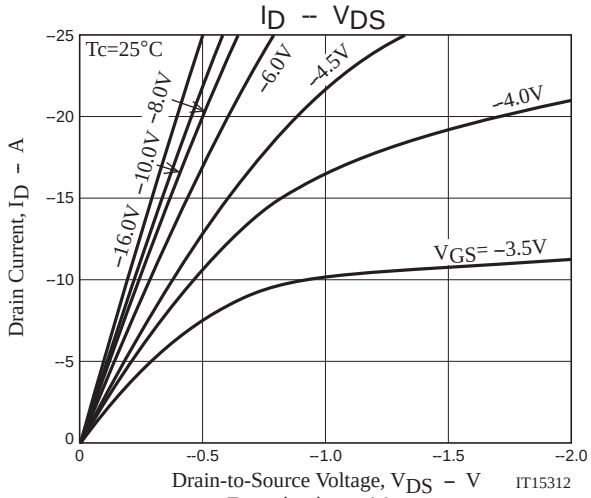

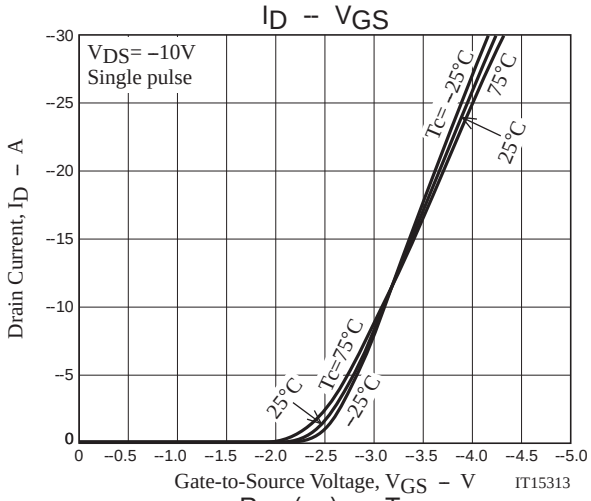

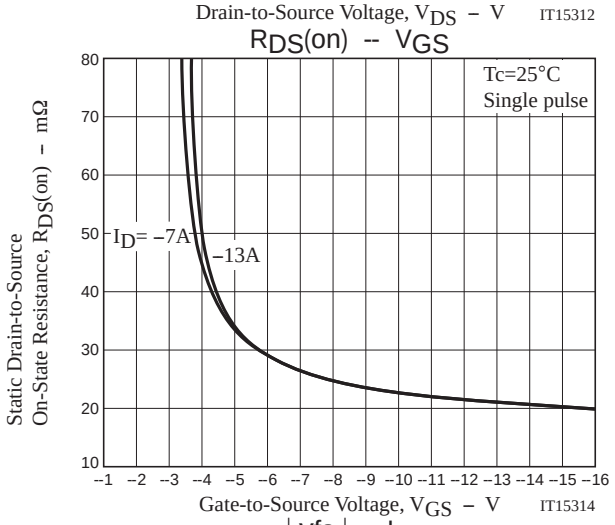

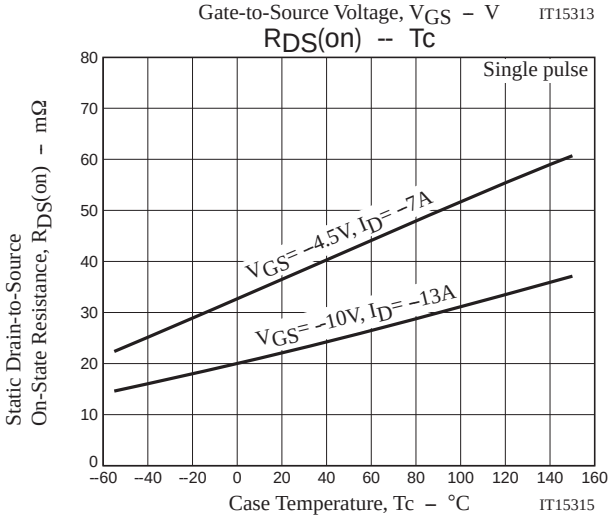

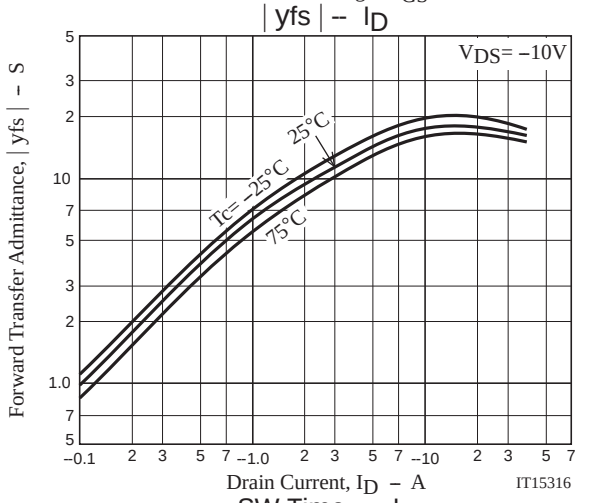

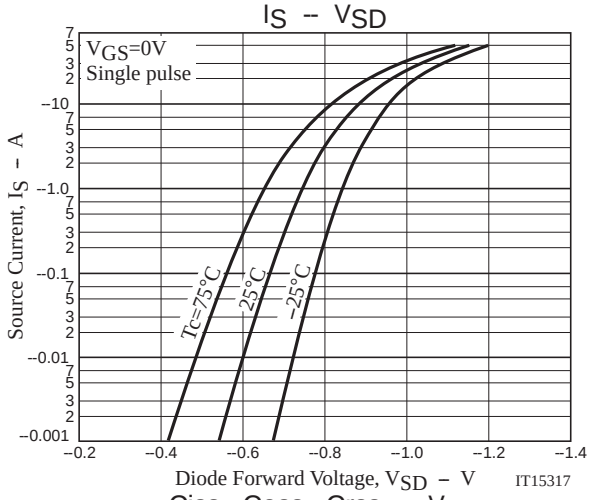

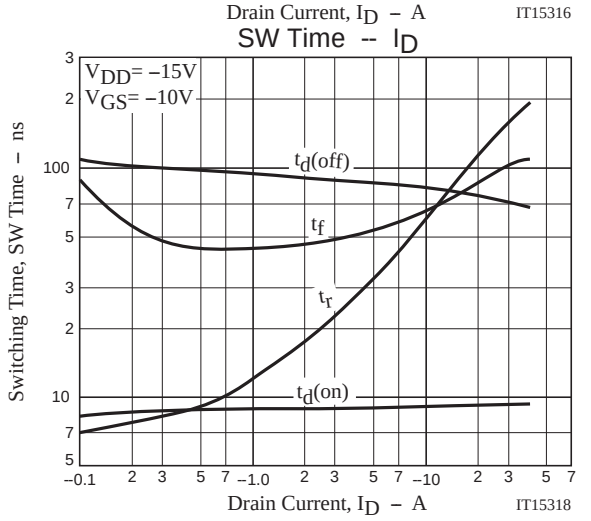

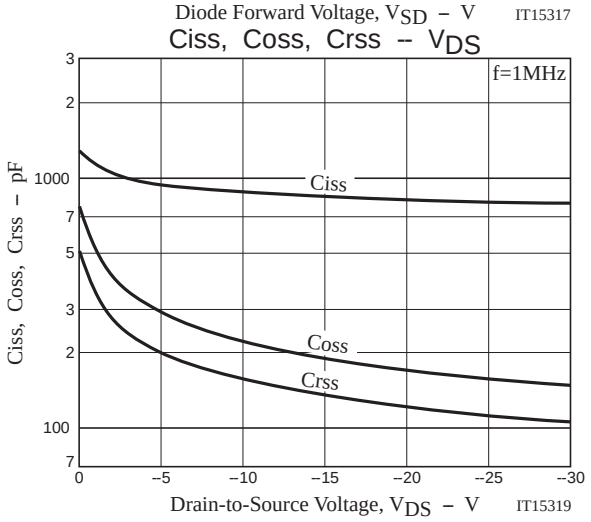

Downloaded from Arrow.com.

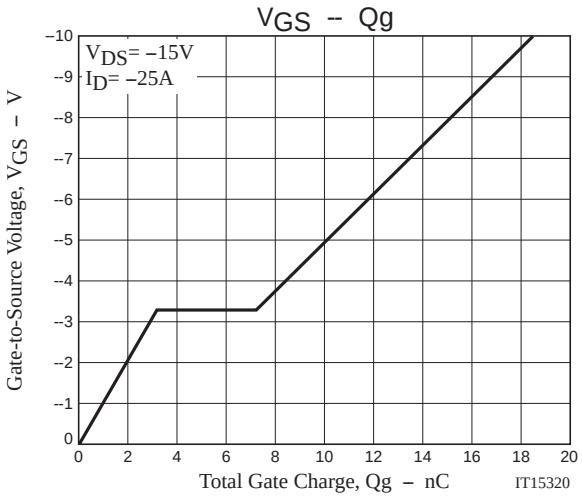

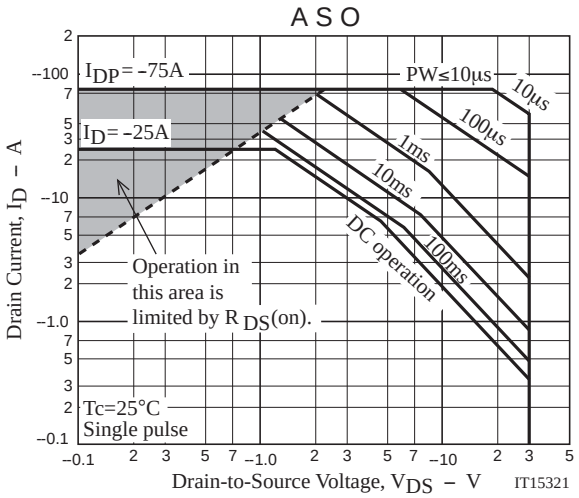

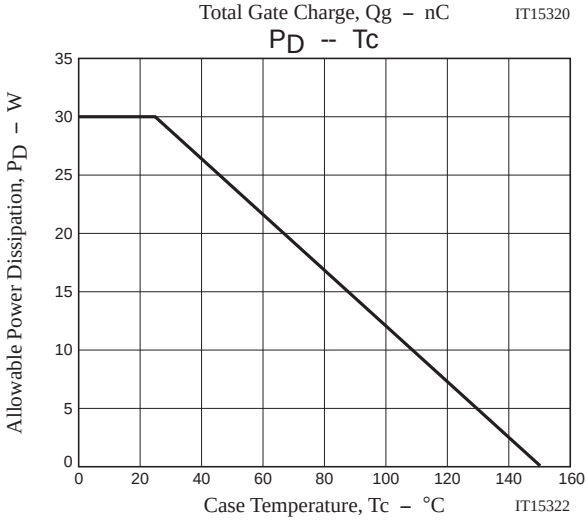

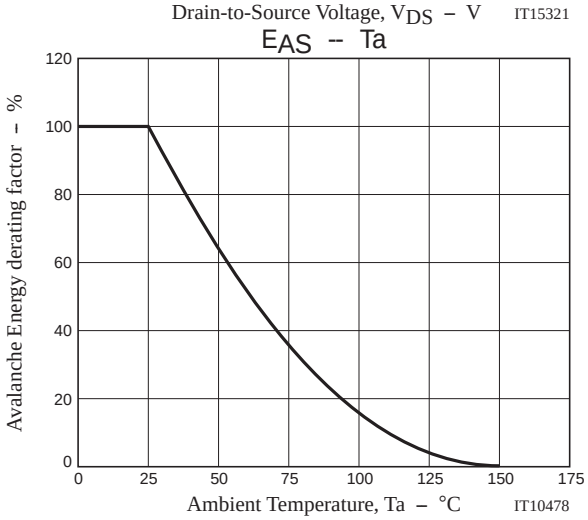

Downloaded from Arrow.com.

Taping Specification

ATP101-TL-H

1. Packing Format (TL)

Package Name	Carrier Tape Type	Maximum Number of devices contained (pcs)			Packing format	
		Reel	Inner box	Outer box	INNER BOX SD-C-18	OUTER BOX SD-A-18
ATPAK	ATP	3,000	3,000	15,000	1 reels contained Dimensions:mm (external) 340×340×28	5 inner boxes contained Dimensions:mm (external) 355×355×165

Packing method

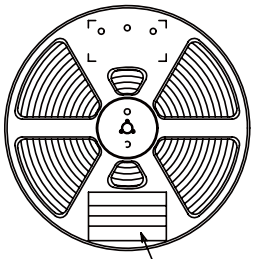

Reel label

Reel label, Inner box label

(unit:mm)

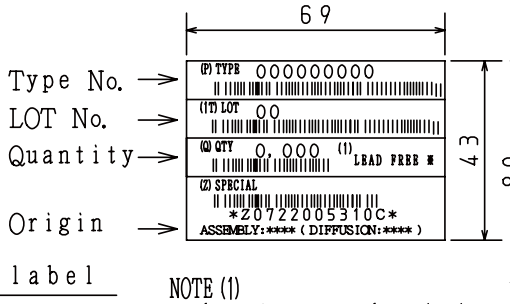

Outer box label

It is a label at the time of factory shipments. The form of a label may change in physical distribution process.

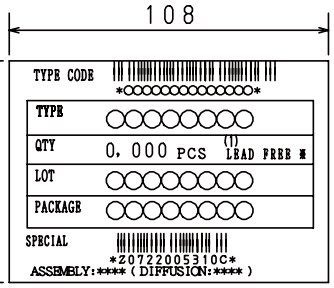

NOTE (1)
The LEAD FREE ※ description shows that the surface treatment of the terminal is lead free.

Label	JEITA Phase
LEAD FREE 3	JEITA Phase 3A
LEAD FREE 4	JEITA Phase 3

2. Taping configuration

2-1. Carrier tape size (unit:mm)

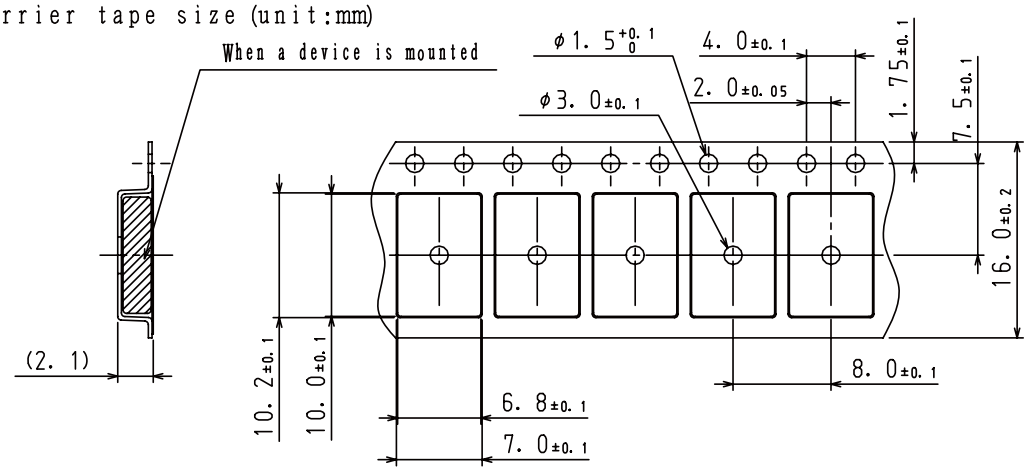

2-2. Device placement direction

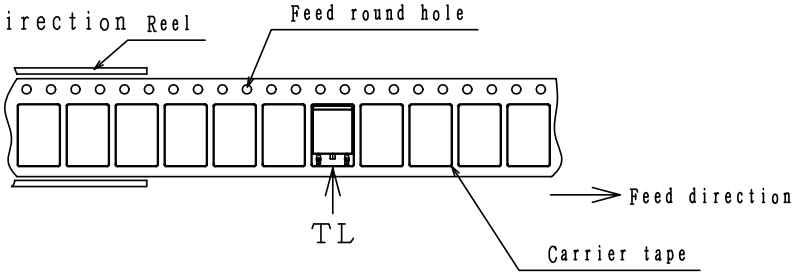

The one erectrode terminals on feed hole side····TL

Downloaded from Arrow.com.

Outline Drawing

ATP101-TL-H

Mass (g)	Unit
0.266 * For reference	mm

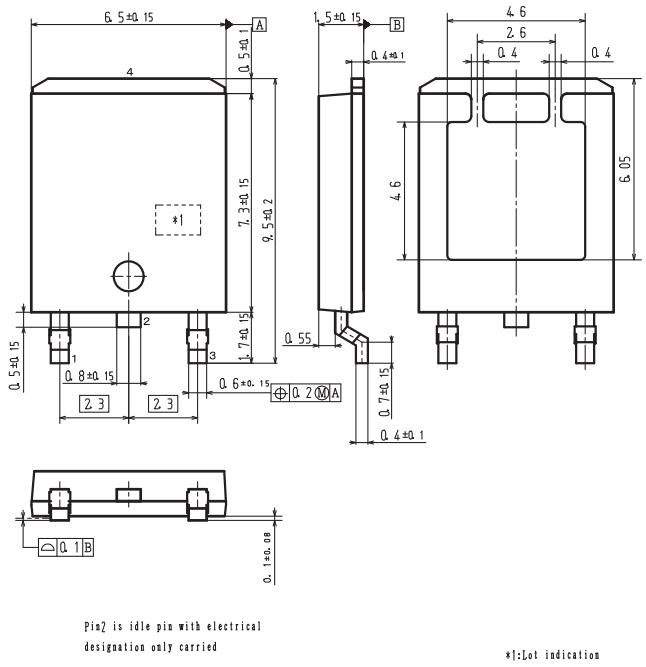

Land Pattern Example

Unit: mm

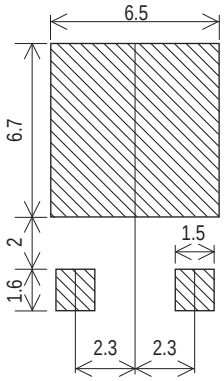

Downloaded from Arrow.com.

Note on usage : Since the ATP101 is a MOSFET product, please avoid using this device in the vicinity of highly charged objects.

ON Semiconductor and the ON logo are registered trademarks of Semiconductor Components Industries, LLC (SCILLC). SCILLC owns the rights to a number of patents, trademarks, copyrights, trade secrets, and other intellectual property. A listing of SCILLC's product/patent coverage may be accessed at www.onsemi.com/site/pdf/Patent-Marking.pdf. SCILLC reserves the right to make changes without further notice to any products herein. SCILLC makes no warranty, representation or guarantee regarding the suitability of its products for any particular purpose, nor does SCILLC assume any liability arising out of the application or use of any product or circuit, and specifically disclaims any and all liability, including without limitation special, consequential or incidental damages. "Typical" parameters which may be provided in SCILLC data sheets and/or specifications can and do vary in different applications and actual performance may vary over time. All operating parameters, including "Typicals" must be validated for each customer application by customer's technical experts. SCILLC does not convey any license under its patent rights nor the rights of others. SCILLC products are not designed, intended, or authorized for use as components in systems intended for surgical implant into the body, or other applications intended to support or sustain life, or for any other application in which the failure of the SCILLC product could create a situation where personal injury or death may occur. Should Buyer purchase or use SCILLC products for any such unintended or unauthorized application, Buyer shall indemnify and hold SCILLC and its officers, employees, subsidiaries, affiliates, and distributors harmless against all claims, costs, damages, and expenses, and reasonable attorney fees arising out of, directly or indirectly, any claim of personal injury or death associated with such unintended or unauthorized use, even if such claim alleges that SCILLC was negligent regarding the design or manufacture of the part. SCILLC is an Equal Opportunity/Affirmative Action Employer. This literature is subject to all applicable copyright laws and is not for resale in any manner.

Downloaded from Arrow.com.