CUI Devices is now Same Sky! Learn More

MODEL: CMT-5023S-SMT-TR | DESCRIPTION: MAGNETIC BUZZER TRANSDUCER

FEATURES

- 5 x 5 x 2 mm
- SMT
- rated frequency of 4000 Hz

SPECIFICATIONS

parameter	conditions/description	min	typ	max	units
rated voltage	Vo-p 0V		3.0		Vo-p
operating voltage		2.0		4.0	Vo-p
current consumption	at rated voltage, 4,000 Hz square wave, ½ duty			110	mA
rated frequency			4,000		Hz
sound pressure level	at 10 cm (A-weight), rated voltage, 4,000 Hz square wave, ½ duty	80			dBA
coil resistance		9	12	15	Ω
dimensions	5.0 x 5.0 x 2.0				mm
weight			0.35		g
material	LCP				
terminal	SMT type (Sn plating)				
operating temperature		-30		70	°C
storage temperature		-40		85	°C
RoHS	yes				

Notes: 1. All specifications measured at 5~35°C, humidity at 45~85%, under 86~106 kPa pressure, unless otherwise noted.

SOLDERABILITY

parameter	conditions/description	min	typ	max	units
reel storage	at relative humidity <40%			25	°C
reflow soldering[2]	see recommended reflow soldering profile			240	°C
drying conditions[3]	bake at 40°C for 24 hours				

Note: 2. It is recommended to reflow solder within 48 hours from opening vacuum packaging at a temperature <30°C & relative humidity <60%.
3. When out of packaging for more than 48 hours.

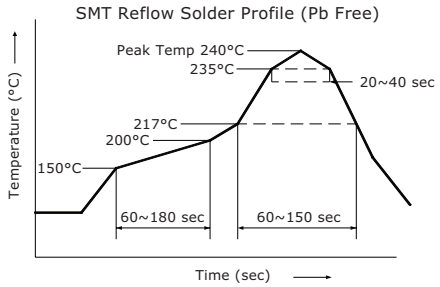

Downloaded from Arrow.com.

MECHANICAL DRAWING

units: mm
tolerance: ±0.2 mm

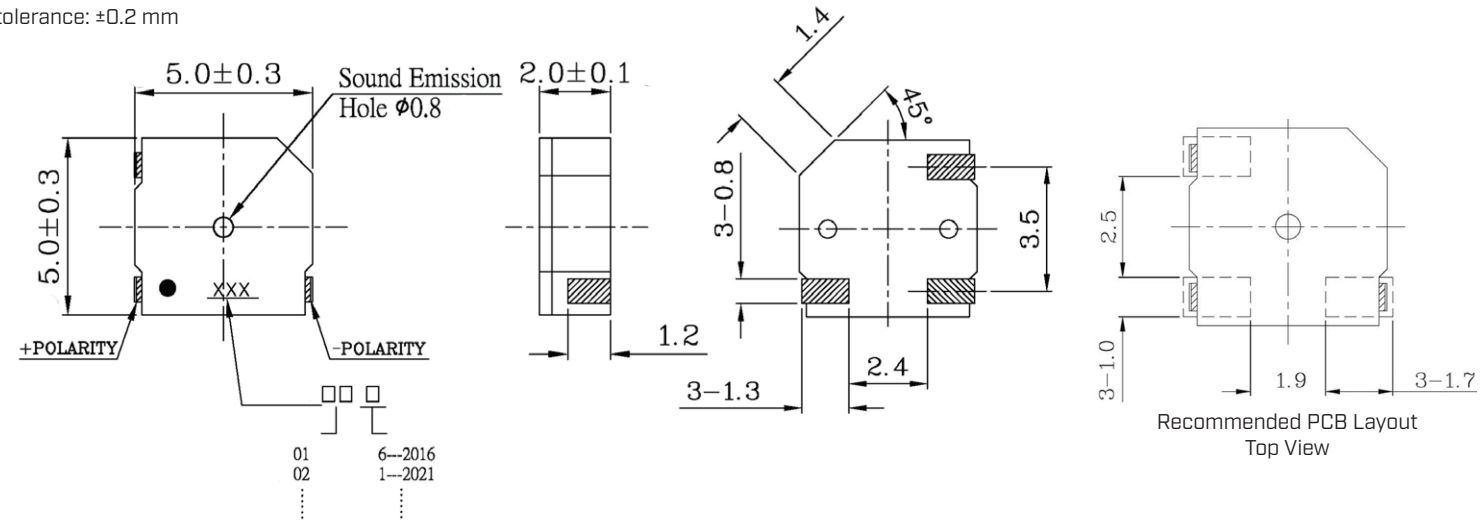

FREQUENCY RESPONSE CURVE

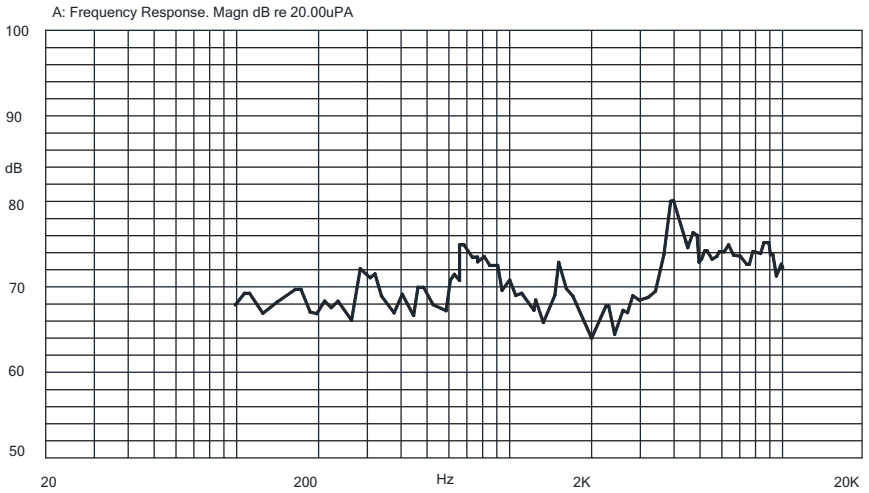

MEASUREMENT METHOD

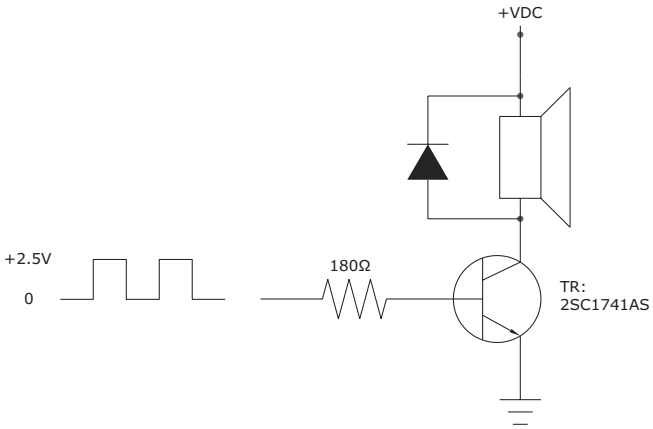

Downloaded from Arrow.com.

PACKAGING

units: mm

Reel Size: Ø330 mm
Carton Size: 370 x 350 x 350 mm
Reel QTY: 2,500 pcs per reel
Carton QTY: 25,000 pcs per carton

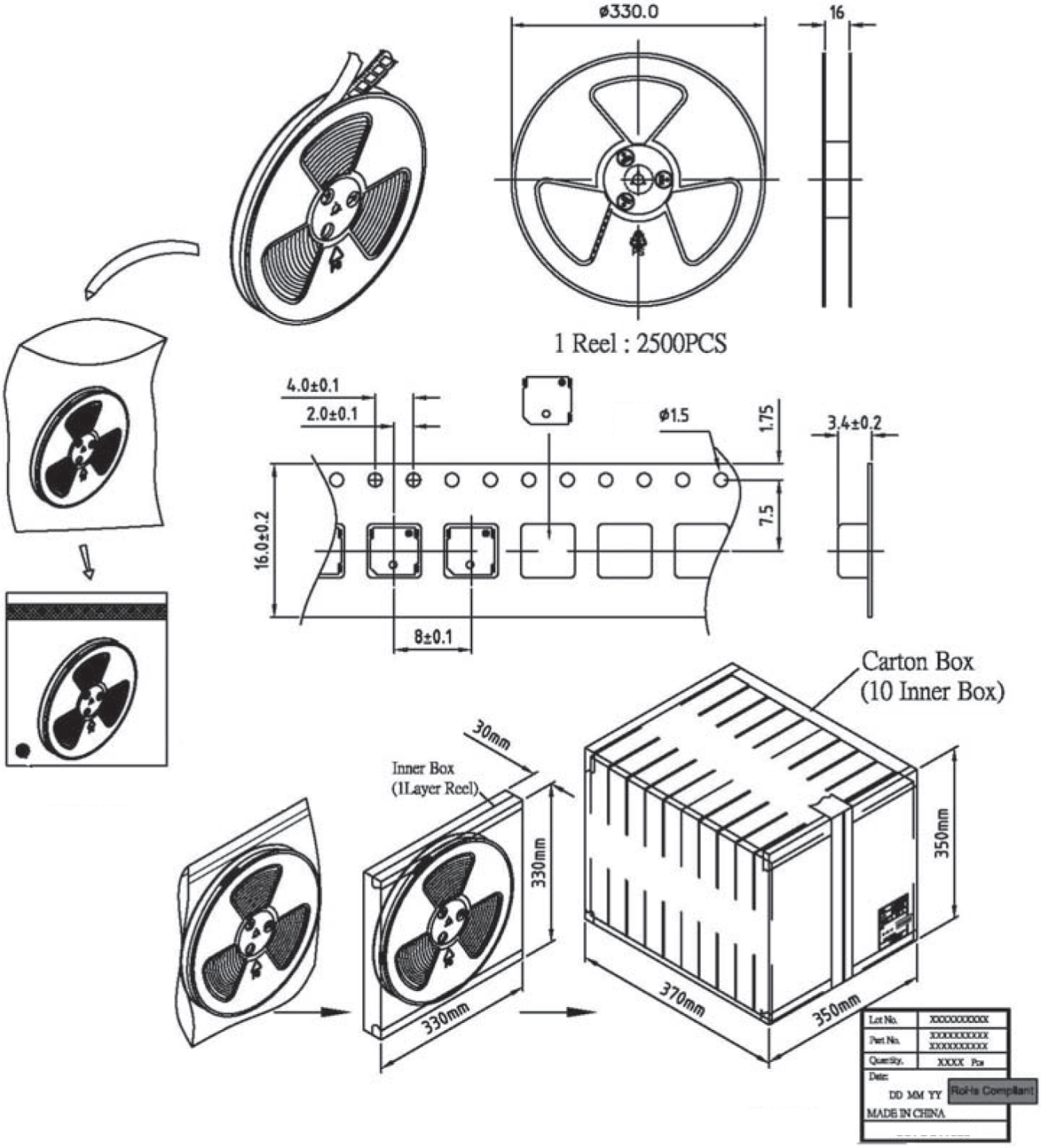

Vacuum bag contains desiccant

Downloaded from Arrow.com.

REVISION HISTORY

rev.	description	date
1.0	initial release	03/28/2016
1.01	added storage and drying conditions	07/29/2019
1.02	brand update	11/22/2019
1.03	updated drawing	08/12/2020
1.04	updated packaging	10/23/2020
1.05	logo, datasheet style update	08/05/2022
1.06	CUI Devices rebranded to Same Sky	09/11/2024

The revision history provided is for informational purposes only and is believed to be accurate.

Same Sky offers a one (1) year limited warranty. Complete warranty information is listed on our website.

Same Sky reserves the right to make changes to the product at any time without notice. Information provided by Same Sky is believed to be accurate and reliable. However, no responsibility is assumed by Same Sky for its use, nor for any infringements of patents or other rights of third parties which may result from its use.

Same Sky products are not authorized or warranted for use as critical components in equipment that requires an extremely high level of reliability. A critical component is any component of a life support device or system whose failure to perform can be reasonably expected to cause the failure of the life support device or system, or to affect its safety or effectiveness.

Downloaded from Arrow.com.