© 2011 TE Connectivity. All Rights Reserved.

REVISIONS					
P	LTR	DESCRIPTION	DATE	DWN	APVD
	G1	REVISED PER ECN-25-300404	28MAR2025	TR	SKN

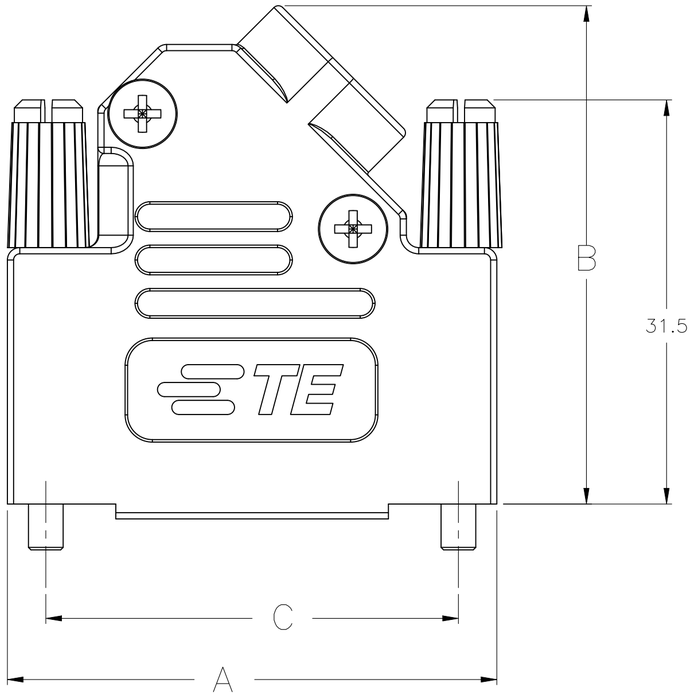

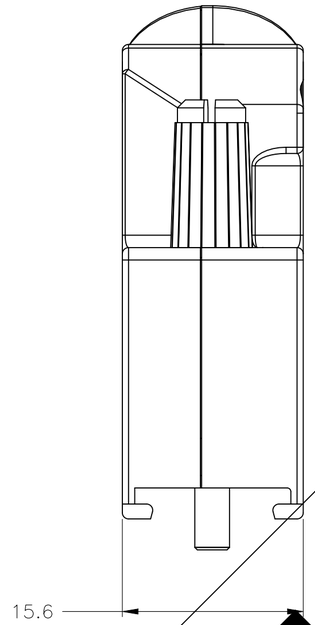

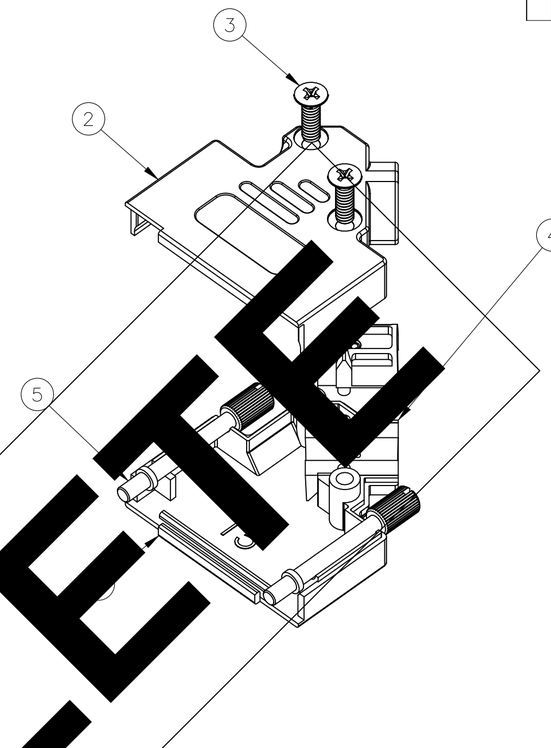

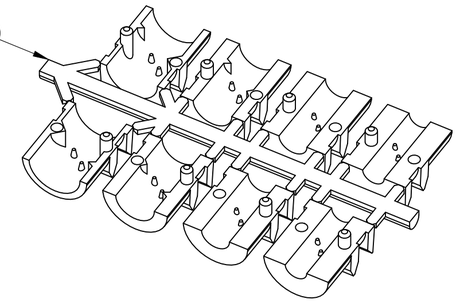

OBSOLETE

1. FOR ASSEMBLY DETAILS, REFER TO LEAFLET 2227518-1.

2. BULK PACKAGED BACKSHELL ASSEMBLIES: ITEMS 1 THRU 5, 100 TIMES QTY SHOWN IN TABLE IN 1 BAG FOR EACH ITEM. ALL BAGS IN 1 BOX WITH (1) 2227518-1 LEAFLET.

3. INDIVIDUALLY PACKAGED SHELL ASSEMBLIES: 1 BAG CONTAINS ALL COMPONENTS FOR 1 COMPLETE ASSEMBLY. 100 BAGS PER BOX, (1) 2227518-1 LEAFLET PER BOX.

4. TERMINATES 4.0-13.0 CABLE DIAMETERS.

5. 15 POSITION SHOWN.

6. TRIVALENT CHROMIUM CHROMATE COATING OVER ZI[illegible] PLATING.

7. JACKSCREW QUANTITY:
   9 WAY ASSEMBLY: 1 JACKSCREW
   15 WAY ASSEMBLY: 2 JACKSCREWS
   25 WAY ASSEMBLY: 2 JACKSCREWS
   37 WAY ASSEMBLY: 2 JACKSCREWS.

8. OPTIONAL CABLE CRIMP KIT AVAILABLE FOR 6.0-9.5 DIAMETER CABLE. SEE 1478764.

9. OBSOLETE

9	SUP[illegible]-1478763-4	3	63.5	40.2	69.5	PHILLIPS	4-40 UNC	4	37 WAY	5-2198618-4
9	SUPERSEDED BY [illegible]-1478763-3	3	47.0	40.2	53.0	PHILLIPS	4-40 UNC	3	25 WAY	5-2198618-3
9	SUPERSEDED BY 5-1478763-2	3	33.3	40.2	39.3	PHILLIPS	4-40 UNC	2	15 WAY	5-2198618-2
9	SUPERSEDED BY 2198618-9	3	25.0	36.2	31.0	PHILLIPS	4-40 UNC	1	9 WAY	5-2198618-1
9		2	63.5	40.2	69.5	PHILLIPS	4-40 UNC	4	37 WAY	3-2198618-7
9		2	47.0	40.2	53.0	PHILLIPS	4-40 UNC	3	25 WAY	2-2198618-5
9		2	33.3	40.2	39.3	PHILLIPS	4-40 UNC	2	15 WAY	1-2198618-5
9		2	25.0	36.2	31.0	PHILLIPS	4-40 UNC	1	9 WAY	2198618-9
	PACKAGING	C	B	A	SELF TAPPING FIXING SCREW TYPE	JACKSCREW THREAD	SHELL SIZE	POSITION	PART NUMBER	

ITEM	DESCRIPTION	MATERIAL	FINISH	QTY
5	JACKSCREW ASSEMBLY, 4-40	POLYAMIDE, UL94 V[illegible] KNOB	BLACK	7
		CARBON STEEL SHAFT	6	
4	STRAIN RELIEF SET	POLYCARBONATE UL94 V0	BLACK	1
3	SELF TAPPING FIXING SCREW	CARBON STEEL	6	2
2	TOP BACKSHELL	ABS UL94 V0	NICKEL	1
1	BOTTOM BACKSHELL	ABS UL94 V0	NICKEL	1

THIS DRAWING IS A CONTROLLED DOCUMENT.
DIMENSIONING AND TOLERANCING PER ASME Y14.5M-2009

DIMENSIONS: mm

TOLERANCES UNLESS OTHERWISE SPECIFIED:
0 PLC ± 0.5
1 PLC ± 0.5
2 PLC ± 0.5
3 PLC ± 0.5
4 PLC ± 0.5
ANGLES ± 0.5°

MATERIAL: SEE TABLE
FINISH: SEE TABLE

DWN C. VALENTINE 09DEC2011
CHK C. ROHDE 08DEC2011
APVD C. ROHDE 08DEC2011
PRODUCT SPEC —
APPLICATION SPEC —
WEIGHT 0.000000

TE Connectivity

NAME: SHIELDED PLASTIC BACKSHELL 45 DEGREE ENTRY —

SIZE A2 | CAGE CODE 00779 | DRAWING NO C-2198618 | RESTRICTED TO —

CUSTOMER DRAWING | SCALE 1:1 | SHEET 1 OF 1 | REV G1

2198618

1471-9 (1/15)

Downloaded from Arrow.com.