PRODUCT NUMBER	DESCRIPTION(PLATING)
10125595-S01LF	CONTACT AREA:AGT PLATING-3.0um SILVER OVER 1.27um NICKEL

D

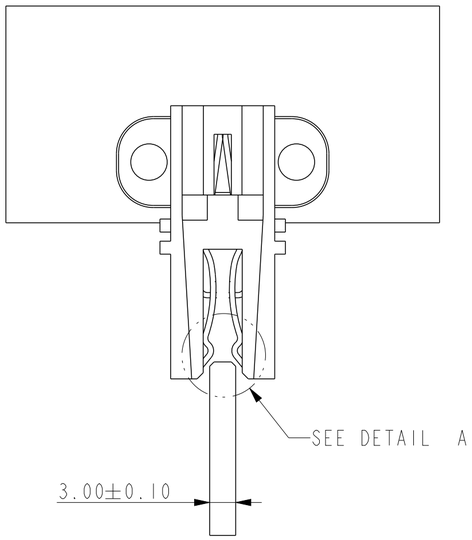

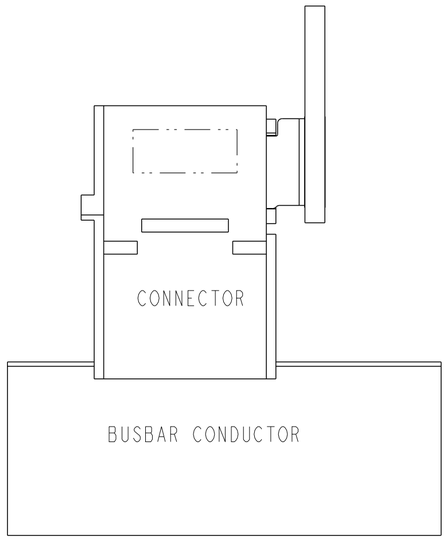

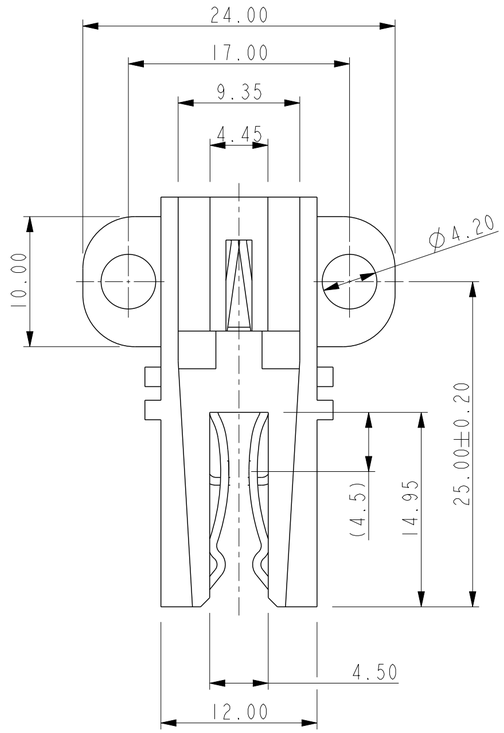

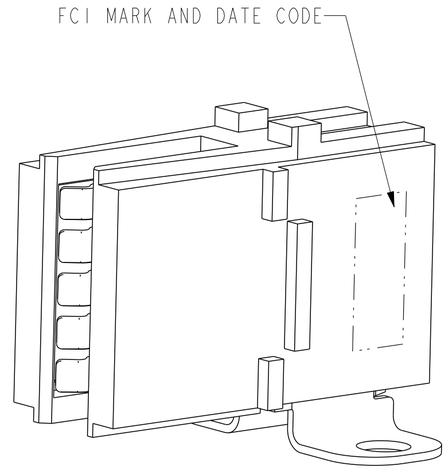

PCB AND BUSBAR-CONDUCTOR IN THESE VIEWS ARE SHOWN FOR REFERENCE ONLY.

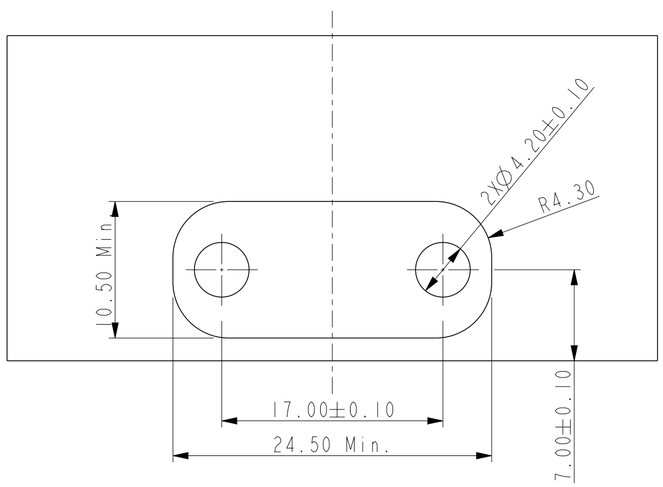

RECOMMENDED PCB LAYOUT THICKNESS 1.5-2.0mm

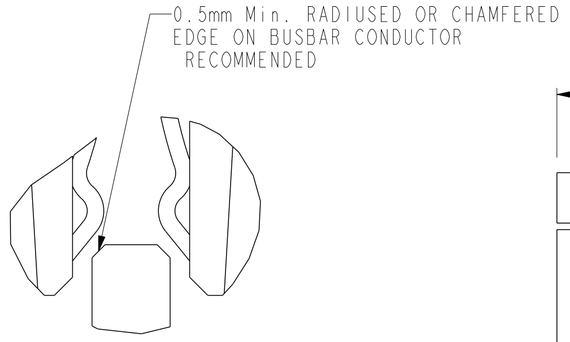

DETAIL A (6:1)

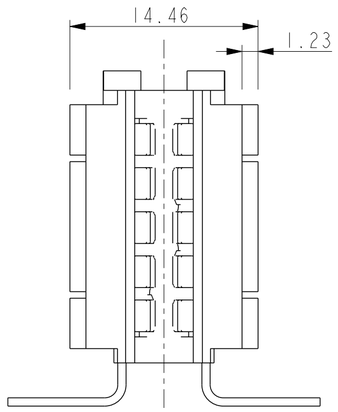

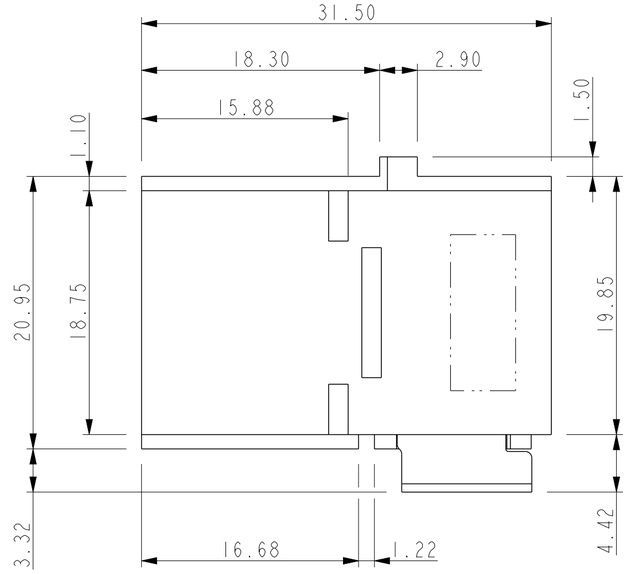

NOTES:

1. CONNECTOR HOUSING:
   HIGH TEMPERATURE THERMOPLASTIC GLASS FILLED,UL 94V-0
   TERMINALS: COPPER ALLOY

2. FINISHES:
   SEE PRODUCT NUMBER

3. PRODUCT SPECIFICATION: GS-12-1179
   APPLICATION SPECIFICATION: GS-20-0396
   PACKING SPECIFICATION: GS-14-2376
4. RECOMMEND INSIDE HEXANOAL HEAD SCREW M4.0

spec ref -			dr	Zhao Peter	2013/06/18	projection	MM	size A2 / scale 3:1
tolerance std ISO 406 ISO 1101	TOLERANCES UNLESS OTHERWISE SPECIFIED		eng	Jackbin Zou	2017/06/09			ecn no ELX-DG-27194-1
			chr	-	-			
			appr	Pei-Ming Zheng	2017/06/28	product family		rel level C Released
surface - ISO 1302	linear	0.X	±0.30	Amphenol FCi	title Screwed Mount Barklip R/A CONNECTOR		dwg no 10125595	rev D
		0.XX	±0.25					
		0.XXX	±0.10					
	angular	0°	±2°	www.fci.com	cat. no. -	Product - Customer Drw		sheet 1 of 1

© 2016 AFCI

Creo File - REV E - 2016-02-12

Downloaded from Arrow.com.