REVISIONS			
LTR	DESCRIPTION	DATE	APPROVED
N/C	INITIAL RELEASE PER DCR# T-22523	1/11/99	M.HIGGY

NOTES:

1. SCREWS ARE SHIPPED LOOSE.
2. MATERIAL: BACKSHELL – ALUMINUM ALLOY, CADMIUM PLATED
   BRAID – COPPER ALLOY, TIN PLATED
   SCREW – STAINLESS STEEL, PASSIVATED & CAD PLATED W/THREAD LOCK.
3. THE 16.00 INCHES APPROX. APPLIES TO THE BRAID IN THE "FLAT" AS SUPPLIED CONDITION.
4. SHIELDING EFFECTIVENESS IS LEVEL 1 PER C-6111 AND C-6115.

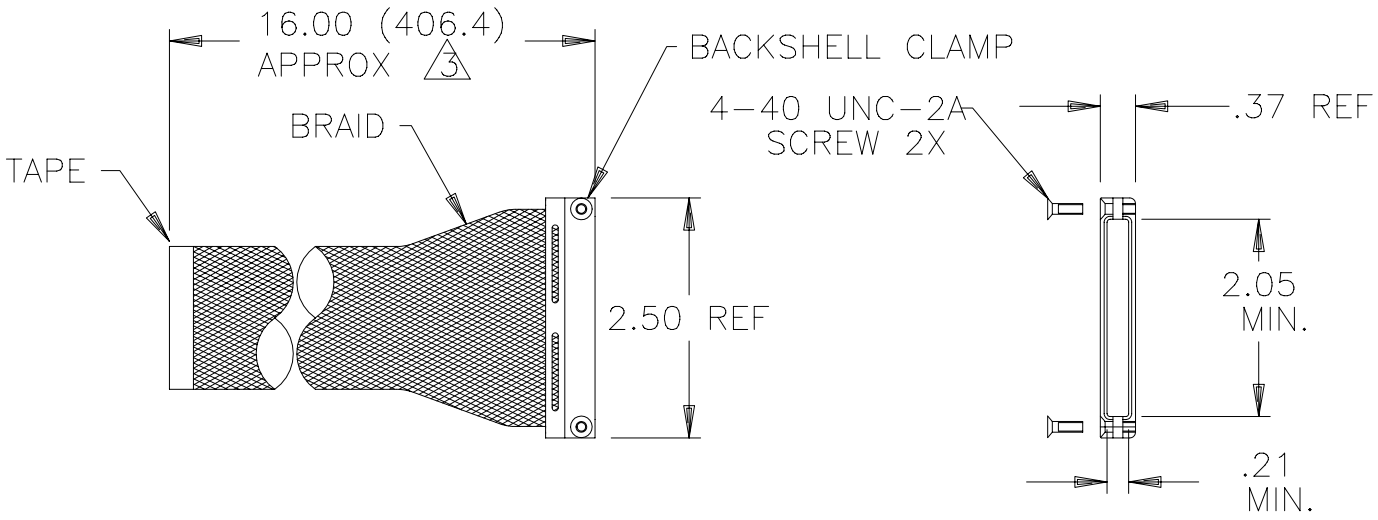

SPECIFICATION CONTROL DRAWING

UNLESS OTHERWISE SPECIFIED DIMENSIONS ARE IN INCHES. METRIC DIMENSIONS ARE IN BRACKETS.	DRAWN ZS.O.	DATE 12/11/98	Raychem	RAYCHEM CORPORATION 300 CONSTITUTION DRIVE MENLO PARK, CALIFORNIA 94025
	CHECKED	DATE	TITLE	
TOLERANCES: .XXX ± [mm] .XX ±.03 [mm] ANGLE	APPROVED M.HIGGY	DATE 1/11/99	BACKSHELL, 2 INCH EMX SUPPRESSING MTC SERIES	
	THIRD ANGLE PROJECTION			
	CAD NAME T22523.DWG		SIZE A / CODE IDENT. NO. 06090 / DWG. NO. CHA-0275-16 / REV N/C	
	P.C.N. 739533		SCALE: NONE / DO NOT SCALE THIS DRAWING / SHEET 1 OF 1	

Downloaded from Arrow.com.