Alle Rechte vorbehalten/ *All rights reserved*

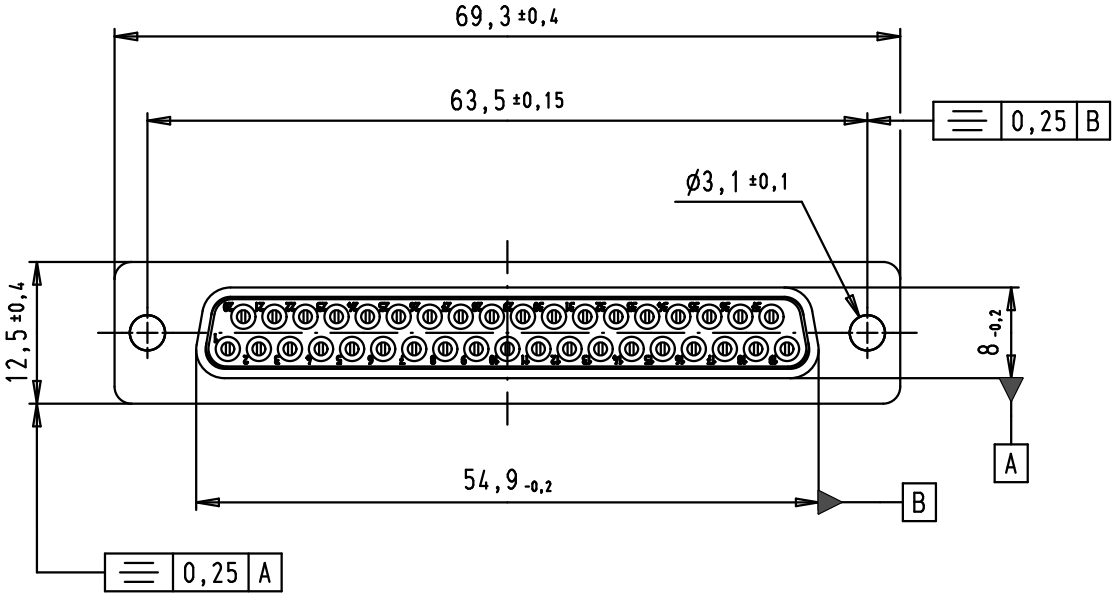

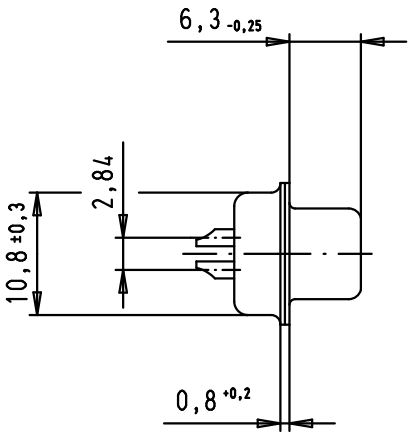

SPECIFICATIONS

Performance level	PL2
Filter type	C
Capacitance	1000 pF±20%
Working voltage	100 V
Current rating	7,5 A
Insulation resistance	>1 GΩ

FREQUENCY (MHz)	ATTENUATION (dB)
5	1
10	3
50	12
100	20
500	34
1000	30

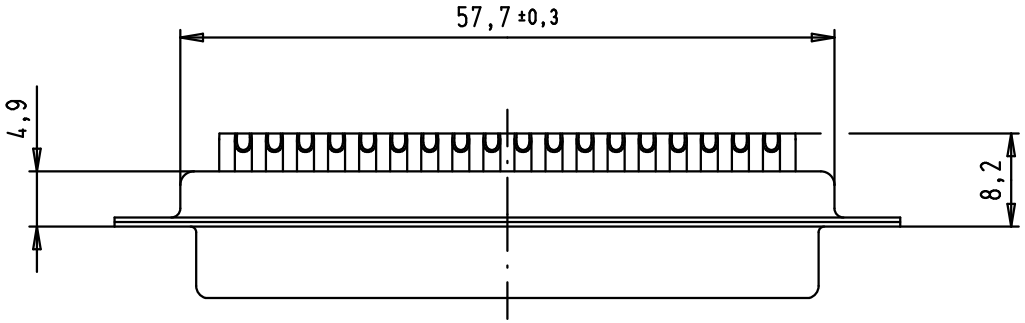

Solder buckets for AWG 20

				Dat.	Name
			Detail.	08/07/02	CV
36283	12/01/12	SD	Insp.	12/01/12	JB
35300	01/12/08	PK	Stand.		
33800	21/08/06	PK			
31058	08/07/02	CV			
Mod.	Dat.	Name			

All Dim. in mm
Orig. Size DIN A 4

D-Sub, female, straight, 37 poles, turned solder buckets

Maßstab/ *Scale* 1,5:1

HARTING EURL
F-95972 Paris

TB 09 64 411 7230

Sub.

Blatt/ *Page* 1/1

Downloaded from Arrow.com.