finder
RELAYING INNOVATION

Electronic staircase timers 10 - 16 A



Staircase light control

14 SERIES

Downloaded from Arrow.com.

Finder reserves the right to make changes to its products and their technical specifications at any time and without prior notice, as part of its policy of continuous improvement.
The information contained in this document is provided for indicative purposes only and does not constitute a contractual obligation; errors and omissions excepted.
In the event of any discrepancy between the printed and online versions, the latter, available at findernet.com, shall prevail.

Downloaded from Arrow.com.

Multi-function electronic staircase timers

- Time setting from 30 seconds to 20 minutes
- "Zero crossing" load switching
- Suitable for 3 or 4 wire systems, with automatic recognition
- Compatible with movement detectors 18 series - (only 14.01 with Staircase timer function)
- LED status indicators
- Cadmium free contact material
- Can be used with illuminated push - buttons
- "Blade + cross" - both flat blade and cross head screw drivers can be used to adjust the function selector, the timing trimmer, and to disengage the 35 mm rail mounting clip
- 35 mm rail (EN 60715) mount

14.01/14.11
Box clamp



For outline drawing see page 14

	14.01	**14.11**
		
	• 8 functions: - Staircase timer - Staircase timer + maintenance function - Staircase timer with early warning - Staircase timer with early warning + maintenance function - Timing step relay - Timing step relay with early warning - Step relay - Light ON	• for centralised switch off • 4 functions: - Step relay - Timing Step relay - Staircase timer - Light ON

Contact specification			
Contact configuration		1 NO (SPST-NO)	1 NO (SPST-NO)
Rated current/Maximum peak current	A	16/30 (120 A - 5 ms)	16/30 (120 A - 5 ms)
Rated voltage/ Maximum switching voltage	V AC	230/—	250/400
Rated load AC1	VA	3700	4000
Rated load AC15 (230 V AC)	VA	750	750
Nominal lamp rating:			
(230 V) incandescent/halogen	W	3000	3000
fluorescent tubes with electronic ballast	W	1500	1500
fluorescent tubes with electromagnetic ballast	W	1000	1000
CFL	W	600	600
(230 V) LED	W	600	600
LV halogen or LED with electronic ballast	W	600	600
LV halogen or LED with electromagnetic ballast	W	1500	1500
Minimum switching load	mW (V/mA)	1000 (10/10)	1000 (10/10)
Standard contact material		$AgSnO_2$	$AgSnO_2$
Supply specification			
Nominal voltage (U_N)	V AC (50/60 Hz)	230	110…240
	V DC	—	—
Rated power	VA (50 Hz)/W	3/1.2	3.2/1
Operating range	AC (50 Hz)	$(0.8…1.1)U_N$	$(90…264)U_N$
	DC	—	—
Reset time (s)		—	3
Technical data			
Electrical life at rated load in AC1	cycles	$100 \cdot 10^3$	$100 \cdot 10^3$
Delay setting	min	0.5…20	0.5…20
Max no. of illuminated push-button (≤ 1 mA)		30	45
Maximum impulse duration		Continuous	Continuous
Dielectric strength between: open contacts	V AC	1000	1000
supply - contacts	V AC	—	2000
Ambient temperature range	°C	–10…+60	–10…+60
Protection category		IP 20	IP 20
Approvals (according to type)		CE UK CA EAC	CE UK CA EAC

Downloaded from Arrow.com.

Multi-function electronic staircase timers

- Time setting from 30 seconds to 20 minutes
- Suitable for 3 or 4 wire systems, with automatic recognition
- Compatible with movement detectors 18 series - (only with Staircase timer function)
- "Zero crossing" load switching
- Cadmium free contact material
- Can be used with illuminated push - buttons
- "Blade + cross" - both flat blade and cross head screw drivers can be used to adjust the function selector, the timing trimmer, and to disengage the 35 mm rail mounting clip
- 35 mm rail (EN 60715) mount

14.61
Push-in terminal



14.71
Box clamp



	14.61	14.71
		
	• 3 functions: - Staircase timer with early warning + Staircase maintenance - Light ON - Staircase timer • Push-In terminals	• 3 functions: - Staircase timer - Staircase timer + maintenance function - Light ON • LED status indicators

For outline drawing see page 14

Contact specification			
Contact configuration		1 NO (SPST-NO)	1 NO (SPST-NO)
Rated current/Maximum peak current	A	10 /—	16/30 (120 A - 5 ms)
Rated voltage/ Maximum switching voltage	V AC	230/—	230/—
Rated load AC1	VA	2300	3700
Rated load AC15 (230 V AC)	VA	450	750
Nominal lamp rating:			
(230 V) incandescent/halogen	W	1000	3000
fluorescent tubes with electronic ballast	W	1500	1500
fluorescent tubes with electromagnetic ballast	W	500	1000
CFL	W	300	600
(230 V) LED	W	300	600
LV halogen or LED with electronic ballast	W	600	600
LV halogen or LED with electromagnetic ballast	W	1500	1500
Minimum switching load	mW (V/mA)	1000 (10/10)	1000 (10/10)
Standard contact material		$AgSnO_2$	$AgSnO_2$
Supply specification			
Nominal voltage (U_N)	V AC (50/60 Hz)	230	230
	V DC	—	—
Rated power	VA (50 Hz)/W	3/1.2	3/1.2
Operating range	AC (50 Hz)	(0.8…1.1)U_N	(0.8…1.1)U_N
	DC	—	—
Technical data			
Electrical life at rated load in AC1	cycles	$100 \cdot 10^3$	$100 \cdot 10^3$
Delay setting	min	0.5…20	0.5…20
Max no. of illuminated push-button (≤ 1 mA)		30	30
Maximum impulse duration		Continuous	Continuous
Dielectric strength between: open contacts	V AC	1000	1000
supply - contacts	V AC	—	—
Ambient temperature range	°C	–10…+60	–10…+60
Protection category		IP 20	IP 20
Approvals (according to type)		CE UKCA EAC	CE UKCA EAC

IV-2026, www.findernet.com

Downloaded from Arrow.com.

Mono-function electronic staircase timers

- Time setting from 30 seconds to 20 minutes
- "Zero crossing" load switching
- Wiring compatible with mechanical versions and with old type (low emission) illuminated push-buttons (14.91)
- Suitable for 3 or 4 wire systems, via "push-button configuration" (14.81)
- 110…125 V AC supply version available (14.81)
- All terminal on same side
- Cadmium free contact material
- Can be used with illuminated push - buttons
- "Blade + cross" - both flat blade and cross head screw drivers can be used to adjust the function selector, the timing trimmer, and to disengage the 35 mm rail mounting clip
- 35 mm rail (EN 60715) mount

14.81/14.91
Box clamp



For outline drawing see page 14

	14.81	**14.91**
		
	• Mono-function: - Staircase timer + maintenance function	• Mono-function: - Signal ON pulse timer
Contact specification		
Contact configuration	1 NO (SPST-NO)	1 NO (SPST-NO)
Rated current/Maximum peak current A	16/30 (120 A - 5 ms)	16/30 (120 A - 5 ms)
Rated voltage/ Maximum switching voltage V AC	230/—	230/—
Rated load AC1 VA	3700	3700
Rated load AC15 (230 V AC) VA	750	750
Nominal lamp rating:		
(230 V) incandescent/halogen W	3000	3000
fluorescent tubes with electronic ballast W	1500	1500
fluorescent tubes with electromagnetic ballast W	1000	1000
CFL W	600	600
(230 V) LED W	600	600
LV halogen or LED with electronic ballast W	600	600
LV halogen or LED with electromagnetic ballast W	1500	1500
Minimum switching load mW (V/mA)	1000 (10/10)	1000 (10/10)
Standard contact material	$AgSnO_2$	$AgSnO_2$
Supply specification		
Nominal voltage (U_N) V AC (50/60 Hz)	110…125/230	230
V DC	—	—
Rated power VA (50 Hz)/W	3/1.2	3/1.2
Operating range AC (50 Hz)	(0.8…1.1)U_N	(0.8…1.1)U_N
DC	—	—
Technical data		
Electrical life at rated load in AC1 cycles	$100 \cdot 10^3$	$100 \cdot 10^3$
Delay setting min	0.5…20	0.5…20
Max no. of illuminated push-button (≤ 1 mA)	45	25
Maximum impulse duration	Continuous	Continuous
Ambient temperature range °C	–10…+60	–10…+60
Protection category	IP 20	IP 20
Approvals (according to type)	CE UK CA EAC	CE UK CA EAC

Downloaded from Arrow.com.

Ordering information

Example: 14 series multi-function timer, 1 NO (SPDT-NO) 16 A contact, supply rated at 230 V AC.

1 4	.	0	1	.	8	.	2 3 0	.	0	0 0	0
Series		Type	No. of poles		Supply version		Supply voltage		Options	Contact circuit	

Series

Type
0 = 35 mm rail (EN 60715) mount, 8 functions
1 = 35 mm rail (EN 60715) mount, with reset, 4 functions
6 = 35 mm rail (EN 60715) mount, 3 functions
7 = 35 mm rail (EN 60715) mount, 3 functions
8 = 35 mm rail (EN 60715) mount, mono-function, all terminals on same side
9 = 35 mm rail (EN 60715) mount, mono-function, 3 terminals

No. of poles
1 = 1 NO (SPST-NO) 16 A contact

Supply version
8 = AC (50/60 Hz)

Supply voltage
120 = 110…125 V AC (14.81 only)
230 = 230 V AC

Options
0 = Standard
P = Push-in terminals (only 14.61)

Contact circuit
0 = Standard
3 = NO (SPST) - voltage free (only 14.11)

Technical data

Insulation				
Dielectric strength between open contacts		V AC	1000	
Other data				
Power lost to the environment				
	without contact current	W	1.2	
	with rated current	W	2	
Maximum cable length for push-button connection		m	200	
Terminals			**Box clamp**	**Push-in terminal**
Wire strip length		mm	10	10
Screw torque		Nm	0.8	—
Min. wire size			solid cable	solid cable
		mm^2	0.5	0.75
		AWG	20	18
Max. wire size			solid cable	solid cable
		mm^2	1 x 4 / 2 x 2.5	1 x 2.5 / 2 x 2.5
		AWG	1 x 12 / 2 x 14	1 x 14 / 2 x 14
Min. wire size			stranded cable	stranded cable
		mm^2	0.5	0.75
		AWG	20	18
Max. wire size			stranded cable	stranded cable
		mm^2	1 x 4 / 2 x 2.5	1 x 2.5 / 2 x 2.5
		AWG	1 x 12 / 2 x 14	1 x 14 / 2 x 14

Zero crossing switching

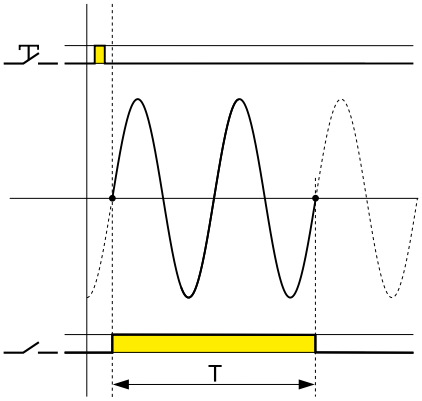

1 - Lower inrush current protects and increases lamp life
2 - Lower inrush current reduces the possibility of contact welding
3 - The current at switch-off is also lower, reducing stress and wear on the contacts

Note
Using the type 14.91, the lamps are switched on directly by the push-button

Downloaded from Arrow.com.

Wiring diagrams

Red LED indication: (with power supply) Continuous = relay ON; Blinking = relay OFF

Type 14.01/14.71

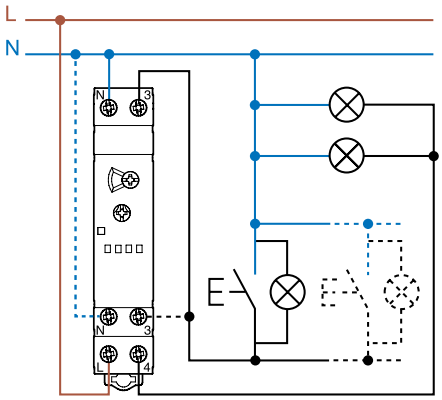

3 wire connection

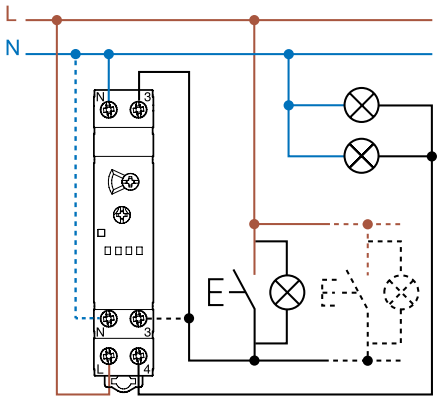

4 wire connection

Type 14.01, 14.61 or 14.71

Without Staircase maintenance function, triggered by PIR movement detector (18 series).

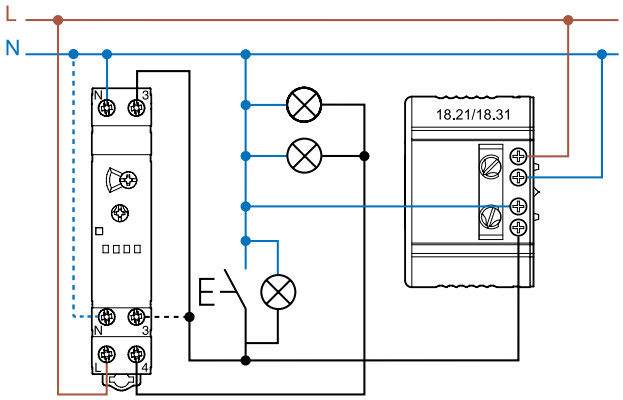

3 wire connection (with 18.21.8.230.0300 or 18.31.8.230.0300 only)

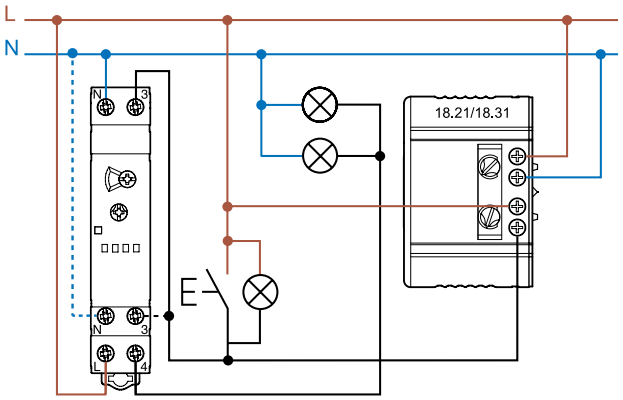

4 wire connection (with 18.21.8.230.0300 or 18.31.8.230.0300 only)

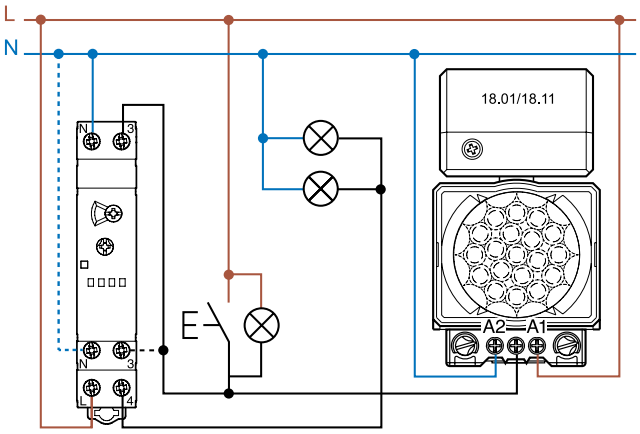

4 wire connection (with 18.01.8.230.0000 or 18.11.8.230.0000 only)

J

Downloaded from Arrow.com.

Wiring diagrams

Type 14.11
Staircase light connection and load with the same phase

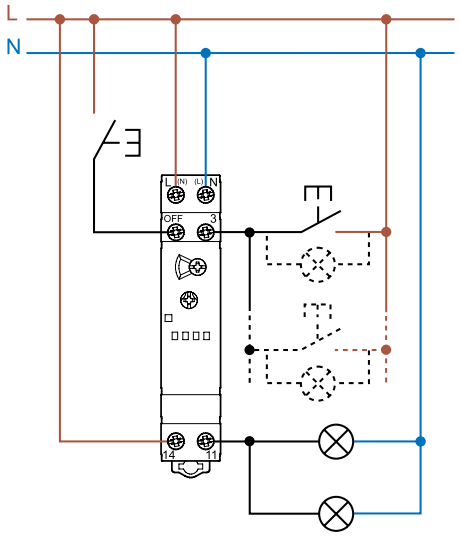

Type 14.11
Staircase light connection and load with different phases

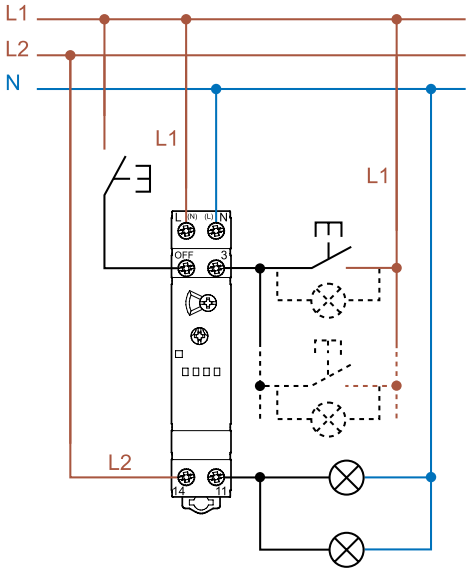

Note: If the load is powered by a phase other than the one that powers staircase light 14.11, a 50% reduction in the nominal lamp load must be applied.

Type 14.61

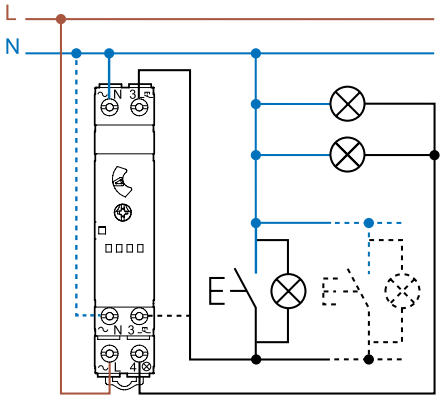

3 wire connection

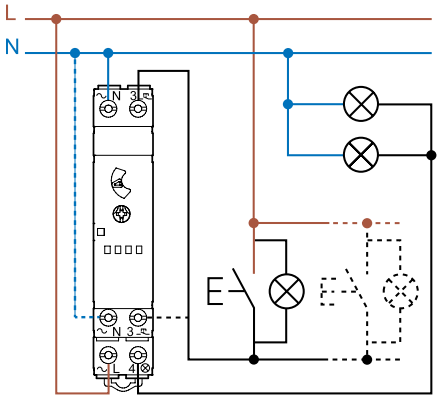

4 wire connection

Terminal Push-in connection

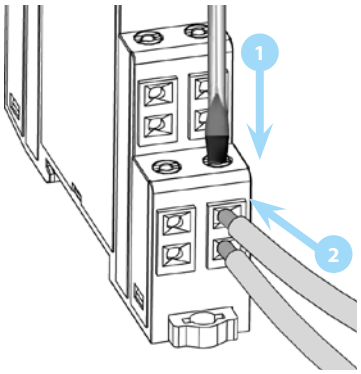

Connection with stranded wire (without screwdriver in case of solid wire)

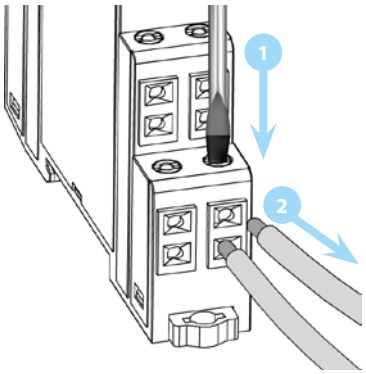

Disconnection of the electrical connection

J

IV-2026, www.findernet.com

Downloaded from Arrow.com.

Wiring diagrams

Type 14.81
Push-button configuration procedure, as per the Installation manual

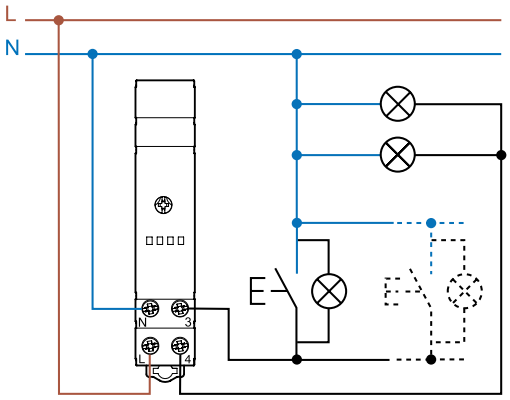

3 wire connection

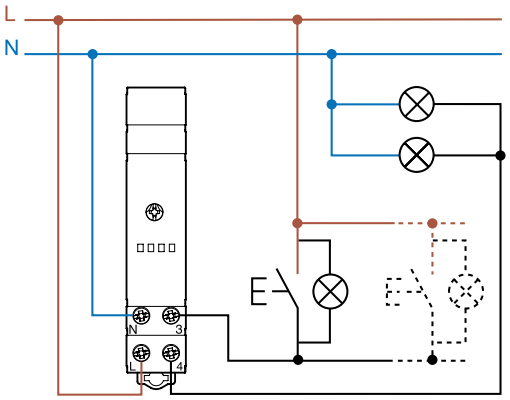

4 wire connection

Type 14.91
The push-buttons must be rated for the load current

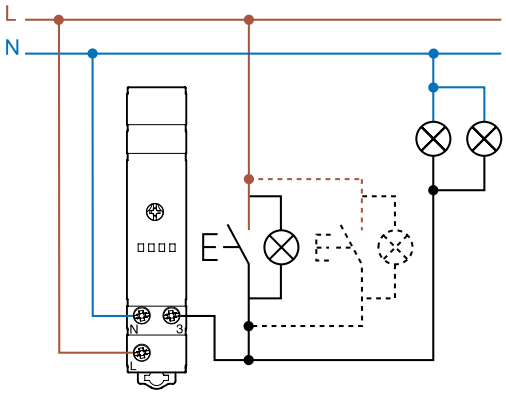

J

Downloaded from Arrow.com.

Functions

Type 14.01 Functions selectable with front rotary selector

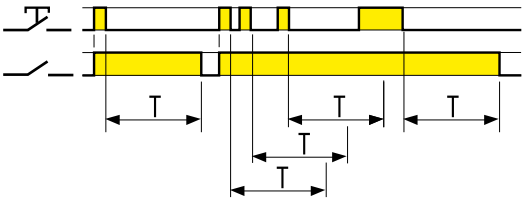

(BE) Staircase timer
On initial impulse the output contact closes and timing starts for the pre-set duration; subsequent impulses during the timing period will extend the timing period by the full pre-set value.
On expiry of the time delay, the output contact opens.

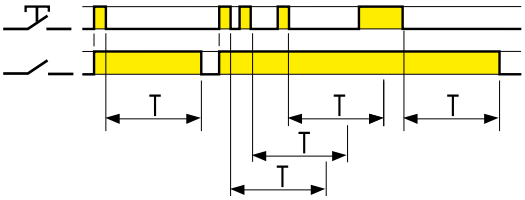

+

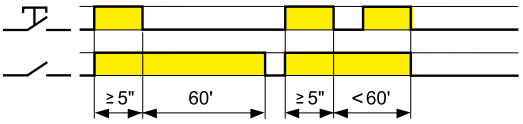

(ME) Staircase timer + Staircase maintenance (BE +)
In addition to the Staircase timer function (BE), an impulse of ≥ 5 seconds will close the output contact for 60 minutes, after which time the contact will open. Ideal for maintenance or cleaning activities. The 60 minute timing can be interrupted by a further impulse of ≥ 5 seconds, and the output contact then opens

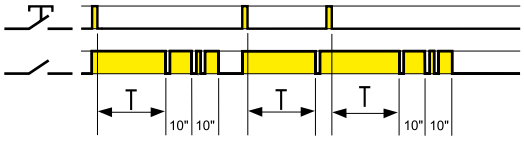

(BP) Staircase timer with early warning
On initial impulse the output contact closes and the timing starts for the pre-set duration.
After the timing period, the output contact blinks off once; 10secs later the contact blinks off twice, and after a further 10secs the contact opens.
During the pre-set and 20 second warning time, it is possible, by a further impulse, to extend the time by the full pre-set value.

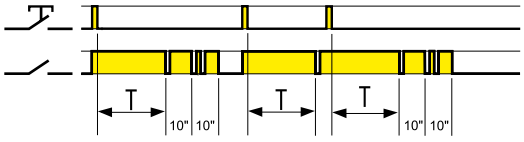

+

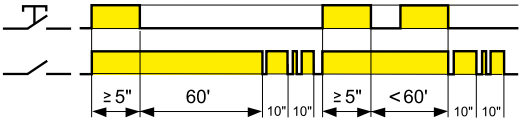

(MP) Staircase timer with early warning + Staircase maintenance (BP +)
In addition to the Staircase timer function (BP), an impulse of ≥ 5 seconds will close the output contact for 60 minutes, after which time the contact will open. Ideal for maintenance or cleaning activities. The 60 minute timing can be interrupted by a further impulse of ≥ 5 seconds, and the output contact then opens

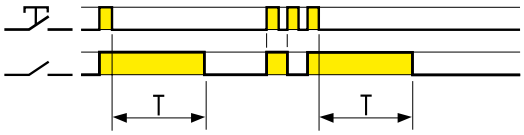

(IT) Timing step relay
On initial impulse the output contact closes and timing starts for the pre-set duration;
On expiry of the time delay, the output contact opens.
During the timing period it is possible to immediately open the contact with a further impulse.

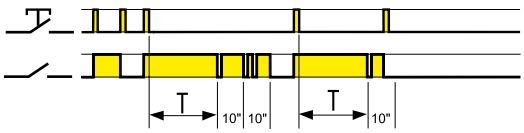

(IP) Timing step relay with early warning
On initial impulse the output contact closes and timing starts for the pre-set duration;
After the timing period, the output contact blinks off once; 10 secs later the contact blinks off twice, and after a further 10 secs the contact opens.
During the pre-set and 20 second warning time, it is possible to immediately open the output contact by a further impulse.

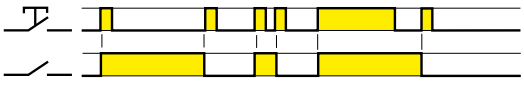

(RI) Step relay
After every impulse, the output contact changes state - alternately switching from open to closed and vice versa.

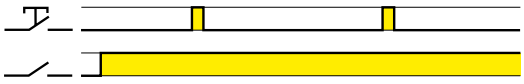

Light ON
With this function set - the output contact stays permanently closed.

NOTE: The blinking within the Early Warning functions (BP and IP) could cause re-start problems for fluorescent lamps with electromagnetic chokes (both conventional and compact types); We consequently suggest not to use such lamps with these functions.

J

IV-2026, www.findernet.com

Downloaded from Arrow.com.

Functions

Type 14.11 Functions selectable with front rotary selector

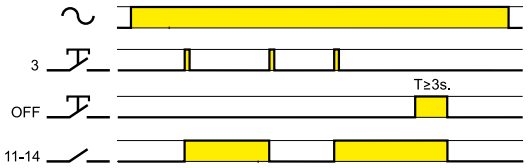

(RI) Step relay
The device works like a classic step relay: the output changes state each time push-button (3) is pressed. Pressing OFF for more than 3 seconds forces the output to the off state.

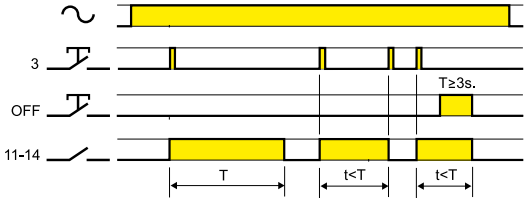

(IT) Timing step relay
On initial impulse the output contact closes and timing starts for the pre-set duration;
On expiry of the time delay, the output contact opens.
During the timing period it is possible to immediately open the contact with a further impulse.
Pressing OFF for more than 3 seconds forces the output to the off state.

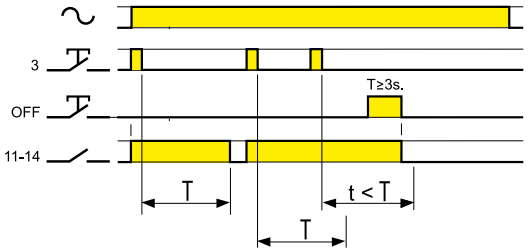

(BE) Staircase timer
On initial impulse the output contact closes and timing starts for the pre-set duration; subsequent impulses during the timing period will extend the timing period by the full pre-set value.
On expiry of the time delay, the output contact opens.
Pressing OFF for more than 3 seconds forces the output to the off state.

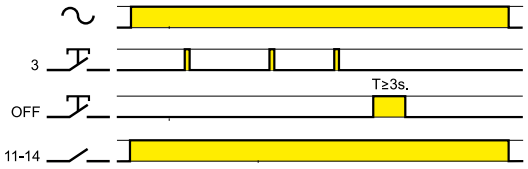

Light ON
With this function set - the output contact stays permanently closed.

J

Downloaded from Arrow.com.

Functions

Type 14.61 Functions selectable with front selector

3-function front selector

	Staircase relay with early warning + Staircase maintenance
	Light ON
	Staircase timer (compatible with 18 series movement detectors)

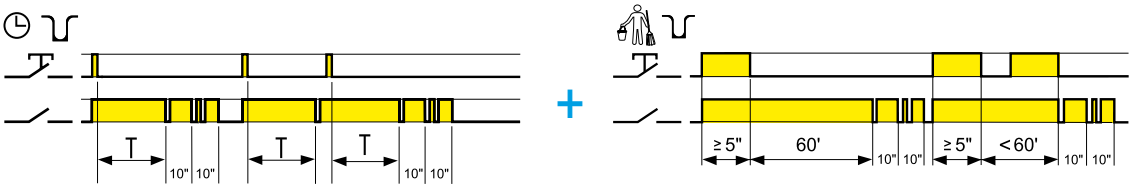

Staircase relay with early warning + Staircase maintenance
In addition to the Staircase relay function (BP), an impulse of ≥5 seconds will close the output contact for 60 minutes, after which time the contact will open. Ideal for maintenance or cleaning activities. The 60 minute timing can be interrupted by a further impulse of ≥5 seconds, and the output contact then opens.

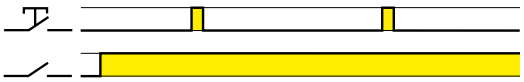

Light ON
With this function set - the output contact stays permanently closed.

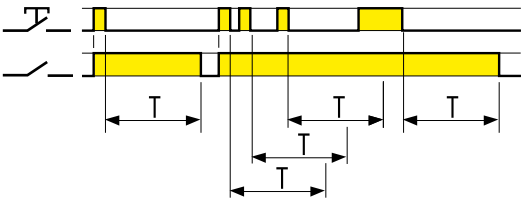

Staircase timer
On initial impulse the output contact closes and timing starts for the pre-set duration; subsequent impulses during the timing period will extend the timing period by the full pre-set value.
On expiry of the time delay, the output contact opens

Type 14.71 Functions selectable with front selector

3-function front selector

	Staircase timer + Staircase maintenance
	Light ON
	Staircase timer (compatible with 18 series movement detectors)

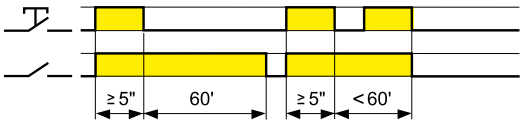

Staircase maintenance
An impulse of ≥ 5 seconds will close the output contact for 60 minutes, after which time the contact will open. Ideal for maintenance or cleaning activities. The 60' timing can be interrupted by a further impulse of ≥ 5 seconds, the output contact opens.

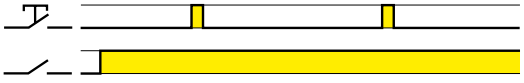

Light ON
With this function set - the output contact stays permanently closed.

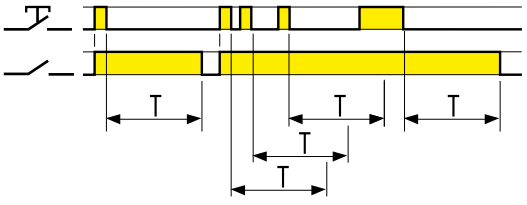

Staircase timer
On initial impulse the output contact closes and timing starts for the pre-set duration; subsequent impulses during the timing period will extend the timing period by the full pre-set value.
On expiry of the time delay, the output contact opens.

IV-2026, www.findernet.com
Downloaded from Arrow.com.

Functions

Type 14.81

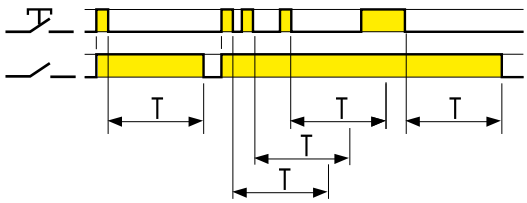

Staircase timer
On initial impulse the output contact closes and timing starts for the pre-set duration; subsequent impulses during the timing period will extend the timing period by the full pre-set value.
On expiry of the time delay, the output contact opens.

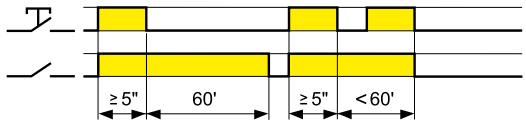

"Staircase maintenance" function
An impulse of ≥ 5 seconds will close the output contact for 60 minutes, after which time the contact will open. Ideal for maintenance or cleaning activities. The 60' timing can be interrupted by a further impulse of ≥ 5 seconds, which will re-establish the staircase timer function; so on expiry of the staircase time delay, the output contact opens.

Type 14.91

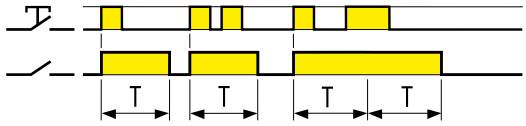

Signal ON pulse
On initial impulse the output contact closes, and remain so for the duration of the preset delay. On expiry of the time delay, the output contact opens.

IV-2026, www.findernet.com

Downloaded from Arrow.com.

Accessories



020.01

Adaptor for panel mounting, 17.5 mm wide	020.01

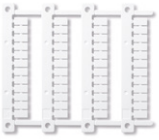

060.48

Sheet of marker tags (CEMBRE Thermal transfer printers), plastic, 48 tags, 6 x 12 mm	060.48

Outline drawings

Type 14.01
Box clamp

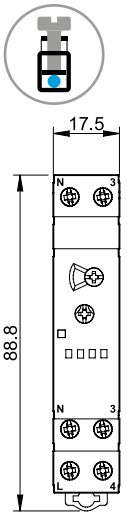

Type 14.11
Box clamp

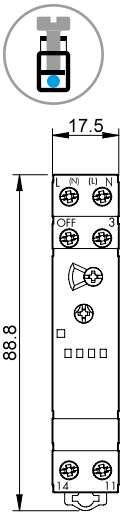

Type 14.61
Push-in terminal

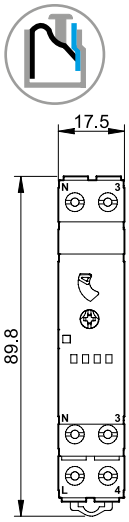

Type 14.71
Box clamp

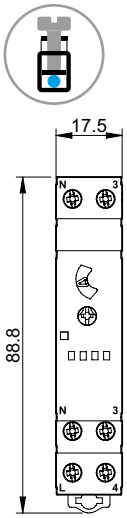

Type 14.81
Box clamp

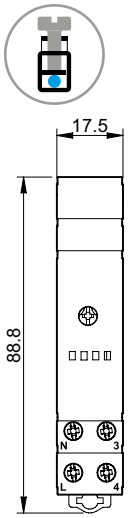

Type 14.91
Box clamp

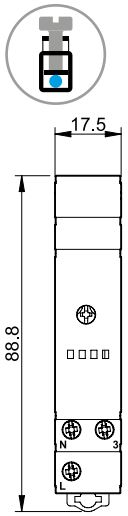

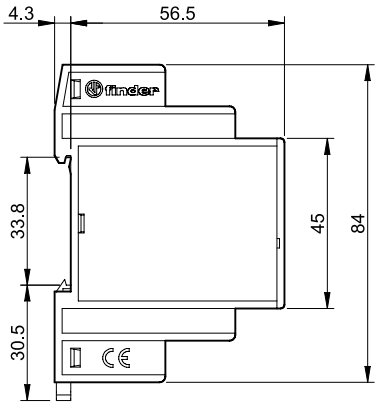

J

Please see general technical information

IV-2026, www.findernet.com

Downloaded from Arrow.com.