Rev	AWO #	Description	Date	Appr
-		RELEASED	3/27/13	

APPROVED: _____

DATE: _____ TITLE: _____

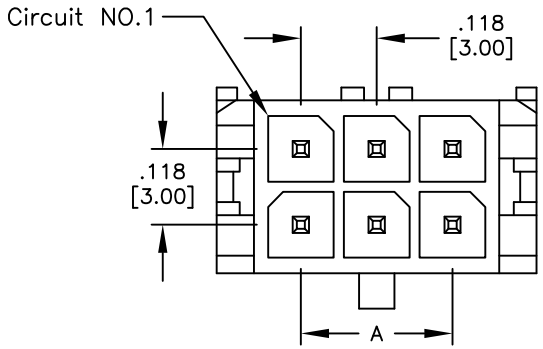

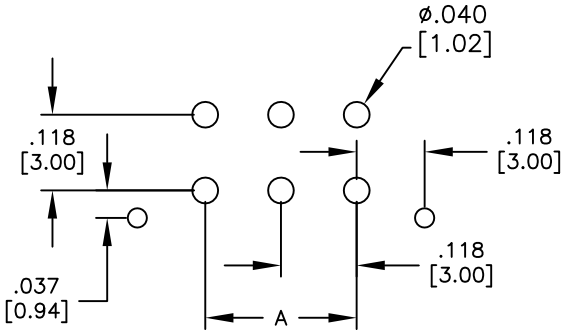

RECOMMENDED PCB LAYOUT

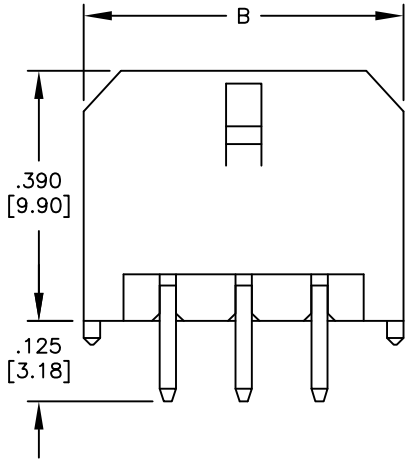

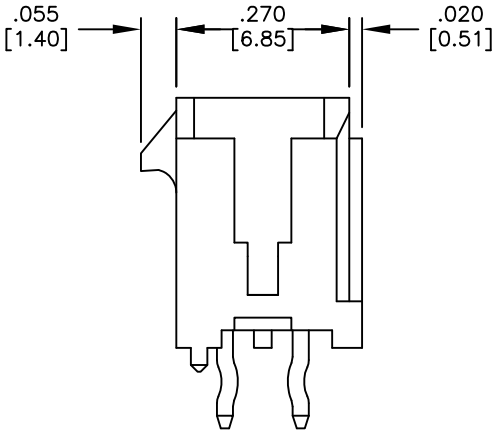

SPECIFICATIONS:
Material:
Insulator: Hi-temp thermoplastic, rated UL 94V-0
Insulator color: Black
Contacts: Brass
Plating:
6u" Gold over Nickel underplate overall
Electrical:
Operating voltage: 250 VAC max
Current rating: 20 & 22 Awg: 5 Amps max
24 Awg: 4 Amps max
26 Awg: 3 Amps max
28 Awg: 2 Amps max
30 Awg: 1 Amp max
Contact resistance: 10 mohms max
Dielectric strength: 1500 VAC for 1 minute
Temperature Rating:
Operating temperature: -25°C to +85°C
Environmental:
Lead free, RoHS compliant.
Recommended soldering temp: 260°C for 5 sec.

RoHS COMPLIANT

Positions: 2 thru 24
A= .118 [3.00] x No. of Spaces
B= .118 [3.00] x No. of Spaces + .262 [6.65]

UNLESS OTHERWISE SPECIFIED
ALL DIMENSIONS ARE INCHES [MM]
TOLERANCES: EXCEPT AS NOTED

INCHES		HOLES	
.X	± .10	Ø.X	±.10
.XX	± .020	Ø.XX	±.015
.XXX	± .015	Ø.XXX	±.010

APPROVALS		DATE
DRAWN	SS	3/27/13
CHECKED		
APPROVED		

ADAM TECH
909 Rahway Avenue, Union, NJ 07083
Phone: 908-687-5000 Fax: 908-687-5710

TITLE
.118" [3.0mm) MICRO FIT HEADER
DUAL ROW VERTICAL, 6u" Gold

SIZE	PART NO.	REV.
X	DML-XX-A-V-G-A-6	-

REF: S00123T | SCALE: NTS | SHEET 1 OF 1

Downloaded from Arrow.com.