CHIP COIL (CHIP INDUCTOR) for Automotive powertrain/safety equipment LQH5BPH□□□□T0□ Murata Standard Reference Specification [AEC-Q200]

1. Scope

This reference specification applies to chip coil (chip inductor) LQH5BPH_T0 series based on AEC-Q200.

1.1 Specific applications:

- Automotive powertrain/safety equipment: Products that can be used for automotive equipment related to running, turning, stopping, safety devices, etc., or equipment whose structure, equipment, and performance are legally required to meet technical standards for safety assurance or environmental protection.
- Automotive infotainment/comfort equipment: Products that can be used for automotive equipment such as car navigation systems and car audio systems that do not directly relate to human life and whose structure, equipment, and performance are not specifically required by law to meet technical standards for safety assurance or environmental protection.
- Medical equipment (GHTF Class C) *Except for implant/surgery/auto injector: Products that can be used for medical equipment of Class C of the international classification class GHTF and whose malfunction is considered to pose a relatively high risk to the human body.
- Medical equipment (GHTF Class A and B): Products that can be used for medical equipment regulated by Class A and Class B of the international classification class GHTF and whose functions do not directly relate to the protection of human life and property.

1.2 Unsuitable application:

Applications listed in “Limitation of applications” in this reference specification.

2. Part Numbering

(Ex.)

LQ	H	5B	P	H	R47	N	T0	L
Product ID	Structure	Dimension (L × W)	Application and characteristic	Category	Inductance	Tolerance	Dimension (T)	Packaging L: ø180 taping K: ø330 taping

3. Part Number and Rating

Operating temperature range	(ambient temperature not including self-temperature rise)	-40°C to +105°C
	(product temperature including self-temperature rise)	-40°C to +125°C
Storage temperature range		-40°C to +125°C

Customer Part number	Murata Part number	Inductance		DC resistance (Ω)	Self-resonant frequency (MHz min.)	Rated current (A)*3					ESD 5 A: 8 kV
		Nominal value (μH)	Tolerance (%)			Based on inductance change*1		Based on temperature rise*2			
								Ambient temperature 85°C		Ambient temperature 105°C	
						Max.	Typ.	Max.	Typ.	Max.	
	LQH5BPHR47NT0L	0.47	N: ±30	0.012±20%	220	7.7	10.3	4.0	5.2	2.05	5A
	LQH5BPHR47NT0K	0.47	N: ±30	0.012±20%	220	7.7	10.3	4.0	5.2	2.05	5A
	LQH5BPH1R0NT0L	1.0	N: ±30	0.019±20%	90	5.8	7.9	3.1	4.4	1.68	5A
	LQH5BPH1R0NT0K	1.0	N: ±30	0.019±20%	90	5.8	7.9	3.1	4.4	1.68	5A
	LQH5BPH1R2NT0L	1.2	N: ±30	0.019±20%	90	5.4	7.0	3.1	4.4	1.68	5A
	LQH5BPH1R2NT0K	1.2	N: ±30	0.019±20%	90	5.4	7.0	3.1	4.4	1.68	5A
	LQH5BPH1R5NT0L	1.5	N: ±30	0.024±20%	70	5.0	6.6	3.0	4.2	1.63	5A
	LQH5BPH1R5NT0K	1.5	N: ±30	0.024±20%	70	5.0	6.6	3.0	4.2	1.63	5A
	LQH5BPH2R2NT0L	2.2	N: ±30	0.030±20%	55	4.0	5.5	2.6	3.7	1.37	5A
	LQH5BPH2R2NT0K	2.2	N: ±30	0.030±20%	55	4.0	5.5	2.6	3.7	1.37	5A
	LQH5BPH2R7NT0L	2.7	N: ±30	0.035±20%	50	3.8	4.9	2.5	3.3	1.23	5A
	LQH5BPH2R7NT0K	2.7	N: ±30	0.035±20%	50	3.8	4.9	2.5	3.3	1.23	5A
	LQH5BPH3R3NT0L	3.3	N: ±30	0.044±20%	40	3.5	4.6	2.3	3.1	1.21	5A
	LQH5BPH3R3NT0K	3.3	N: ±30	0.044±20%	40	3.5	4.6	2.3	3.1	1.21	5A

Downloaded from Arrow.com.

Customer Part number	Murata Part number	Inductance		DC resistance (Ω)	Self-resonant frequency (MHz min.)	Rated current (A)*3					ESD 5 A: 8 kV
		Nominal value (μH)	Tolerance (%)			Based on inductance change*1		Based on temperature rise*2			
								Ambient temperature 85°C		Ambient temperature 105°C	
						Max.	Typ.	Max.	Typ.	Max.	
	LQH5BPH4R7NT0L	4.7	N: ±30	0.058±20%	40	3.0	3.9	2.0	2.8	1.09	5A
	LQH5BPH4R7NT0K	4.7	N: ±30	0.058±20%	40	3.0	3.9	2.0	2.8	1.09	5A
	LQH5BPH6R8NT0L	6.8	N: ±30	0.083±20%	30	2.5	3.1	1.65	2.4	0.96	5A
	LQH5BPH6R8NT0K	6.8	N: ±30	0.083±20%	30	2.5	3.1	1.65	2.4	0.96	5A
	LQH5BPH100MT0L	10	M: ±20	0.106±20%	25	2.0	2.6	1.6	2.2	1.00	5A
	LQH5BPH100MT0K	10	M: ±20	0.106±20%	25	2.0	2.6	1.6	2.2	1.00	5A
	LQH5BPH150MT0L	15	M: ±20	0.187±20%	18	1.6	2.2	1.2	1.6	0.62	5A
	LQH5BPH150MT0K	15	M: ±20	0.187±20%	18	1.6	2.2	1.2	1.6	0.62	5A
	LQH5BPH220MT0L	22	M: ±20	0.259±20%	15	1.4	1.9	1.05	1.4	0.55	5A
	LQH5BPH220MT0K	22	M: ±20	0.259±20%	15	1.4	1.9	1.05	1.4	0.55	5A
	LQH5BPH330MT0L	33	M: ±20	0.430±20%	6	1.0	1.5	0.75	1.23	0.37	5A
	LQH5BPH330MT0K	33	M: ±20	0.430±20%	6	1.0	1.5	0.75	1.23	0.37	5A
	LQH5BPH470MT0L	47	M: ±20	0.540±20%	5	0.85	1.2	0.67	0.9	0.35	5A
	LQH5BPH470MT0K	47	M: ±20	0.540±20%	5	0.85	1.2	0.67	0.9	0.35	5A
	LQH5BPH101MT0L	100	M: ±20	0.850±20%	5	0.60	0.69	0.55	0.8	0.33	5A
	LQH5BPH101MT0K	100	M: ±20	0.850±20%	5	0.60	0.69	0.55	0.8	0.33	5A

*1 When rated current is applied to the products, inductance will be within ±30% of nominal inductance value.
*2 When rated current is applied to the products, temperature rise caused by self-generated heat shall be limited to 40°C max (ambient temperature 85°C max).
When rated current is applied to the products, temperature rise caused by self-generated heat shall be limited to 20°C max (ambient temperature 85°C to 105°C).
*3 Keep the temperature (ambient temperature plus self-generation of heat) under 125°C.

4. Testing Conditions

Unless otherwise specified	Temperature: ordinary temperature (15°C to 35°C) Humidity: ordinary humidity [25% to 85% (RH)]
In case of doubt	Temperature: 20°C±2°C Humidity: 60% to 70% (RH) Atmospheric pressure: 86 kPa to 106 kPa

Downloaded from Arrow.com.

5. Appearance and Dimensions

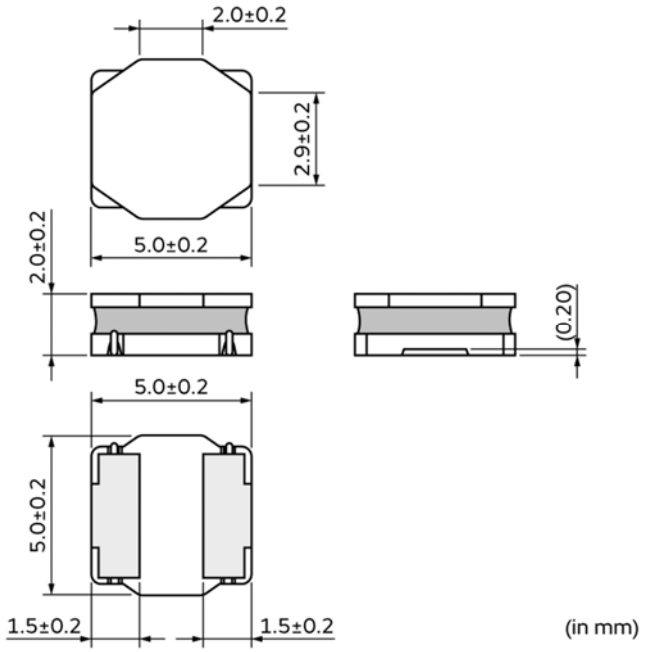

Unit mass (typical value): 0.22 g

6. Marking

No marking.

7. Electrical Performance

No.	Item	Specification	Test method
7.1	Inductance	Meet chapter 3 ratings.	Measuring equipment: Keysight 4284A or the equivalent Measuring frequency: 100 kHz
7.2	DC resistance	Meet chapter 3 ratings.	Measuring equipment: digital multimeter
7.3	Self-resonant frequency	Meet chapter 3 ratings.	Measuring equipment: Keysight E4991A or the equivalent

8. AEC-Q200 Requirement

8.1 Performance [based on table 5 for magnetics (inductors/transformer) AEC-Q200 Rev. E issued March 20. 2023]

AEC-Q200			Murata specification/deviation
No.	Stress	Test method	
3	High Temperature Exposure (Storage)	Unpowered 1000 h at 125°C Set for 24±4 h at room condition, then measured	Meet table A after testing. Table A Appearance: No damage Inductance change (at 100 kHz): Within ±10% DC resistance change: Within ±10%
4	Temperature Cycling	Unpowered 1000 cycles -40°C to +125°C Set for 24 h at room condition, then measured.	Meet table A after testing.
7	Humidity Bias	Unpowered 1000 h at 85°C, 85% (RH). Set for 24 h at room condition, then measured.	Meet table A after testing.

Downloaded from Arrow.com.

AEC-Q200			Murata specification/deviation
No.	Stress	Test method	
8	High Temperature Operating Life	125°C 1000 h Applying current: rated current Set for 24 h at room condition, then measured.	Meet table A after testing. The temperature condition is included ambient temperature on device and self temperature rise(⊿T=40℃Max)
9	External Visual	Visual inspection	No abnormalities
10	Physical Dimensions	Meet chapter 5, "Appearance and Dimensions".	No defects
12	Resistance to Solvents	Per MIL-STD-202 Method 215	Not applicable
13	Mechanical Shock	Per MIL-STD-202 Method 213 Condition C Peak: 100g's Duration: 6ms Waveform: half sine	Meet table A after testing.
14	Vibration	Per MIL-STD-202 Method 204 5g's for 20min 12 cycles each of 3 orientations Test from 10Hz to 2000Hz	Meet table A after testing.
15	Resistance to Soldering Heat	Per MIL-STD-202 Method 210 Condition K Reflow Flux: ethanol solution with a rosin content of 25wt% Solder: Sn-3.0Ag-0.5Cu Above 217°C, 60s to 150s 250±5 °C, 30±5 s 3 times	Meet table A after testing.
17	ESD	Per AEC-Q200-002 HBM: 150pF, 2000ohm	ESD Rank: Refer to chapter 3, "Part Number and Rating". Meet table A after testing.
18	Solderability	Per J-STD-002 Method B1 Pre dry bake: 155°C for 4h±15m Flux: ethanol solution with a rosin content of 25wt% No Pre-Heating Solder: Sn-3.0Ag-0.5Cu 245±5 °C, 5(+0/-0.5) s	95% or more of the outer electrode shall be covered with new solder seamlessly.
18	Solderability	Per J-STD-002 Method D Pre dry bake: 155°C for 4h±15m Flux: ethanol solution with a rosin content of 25wt% No Pre-Heating Solder: Sn-3.0Ag-0.5Cu 260±5°C, 30(+5/-0)s	Leaching/dewetting shall be no more than 5% of the outer electrode.
19	Electrical Characterization	Measured: inductance	No defects
20	Flammability	Per UL-94 or IEC 60695-11-5	Not applicable
21	Board Flex (SMD)	Per AEC-Q200-005 Epoxy-PCB thickness: 1.6mm Deflection: 2mm Radius: 340mm Holding time: 60s	Meet table B after testing. Table B Appearance: No damage DC resistance change rate: Within ±10%
22	Terminal Strength (SMD)	Per AEC-Q200-006 Applying force: 17.7N Holding time: 60s	No defects

Downloaded from Arrow.com.

9. Specification of Packaging

9.1 Appearance and dimensions of tape (12 mm width/plastic tape)

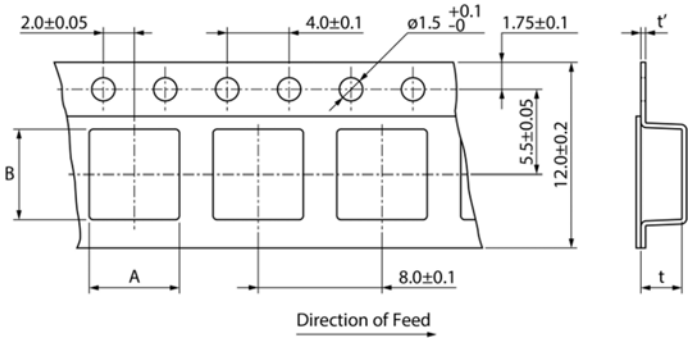

A	5.3±0.1
B	5.3±0.1
t	2.4±0.1
t'	(0.3)

(in mm)

* The dimensions of the cavity are measured at its bottom.

■Top view

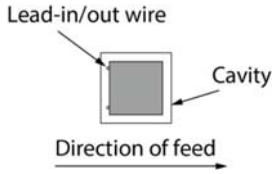

9.2 Taping specifications

Packing quantity (Standard quantity)	ø180 mm reel: 500 pcs/reel ø330 mm reel: 3000 pcs/reel
Packing method	The products are placed in embossed cavities of a plastic tape and sealed by a cover tape.
Feed hole position	The feed holes on the plastic tape are on the right side when the cover tape is pulled toward the user.
Joint	The plastic tape and the cover tape are seamless.
Number of missing products	Number of missing products within 0.025% of the number per reel or 1 pc., whichever is greater, and are not continuous. The specified quantity per reel is kept.

9.3 Break down force of tape

Break down force of plastic tape	10 N min.
Break down force of cover tape	5 N min.

9.4 Peeling off force of cover tape

Speed of peeling off	300 mm/min
Peeling off force	0.2 N to 0.7 N (The lower limit is for typical value.)

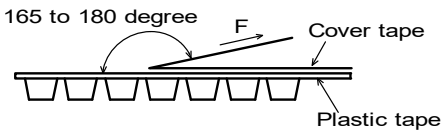

Downloaded from Arrow.com.

9.5 Dimensions of leader section, trailer section and reel

A vacant section is provided in the leader (start) section and trailer (end) section of the tape for the product. The leader section is further provided with an area consisting only of the cover tape. (See the diagram below.)

• Packaging: L (ø180 mm reel)

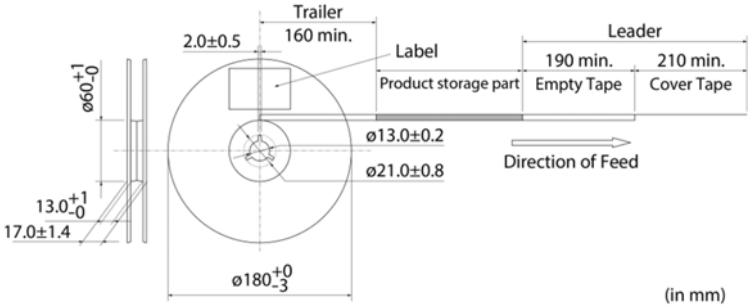

• Packaging: K (ø330 mm reel)

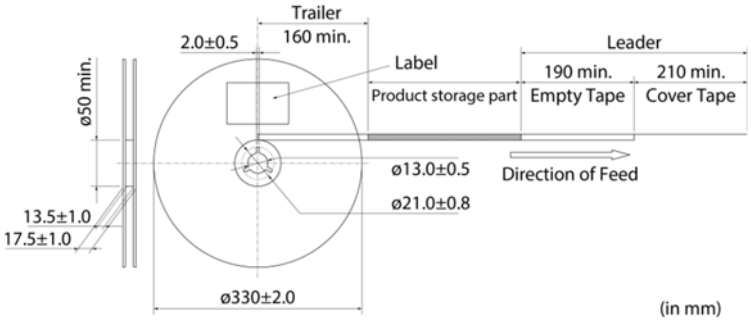

9.6 Marking for reel

Customer part number, Murata part number, inspection number (*1), RoHS marking (*2), quantity, etc.

*1 Expression of inspection No.: □□ (1) ○○○○ (2) ◇◇◇ (3)	(1) Factory code (2) Date First digit: year/last digit of year Second digit: month/Jan. to Sep.→1 to 9, Oct. to Dec.→O, N, D Third, Fourth digit: day (3) Serial No.
*2 Expression of RoHS marking: ROHS- Y (1) (△) (2)	(1) RoHS regulation conformity (2) Murata classification number

9.7 Marking on outer box (corrugated box)

Customer name, purchasing order number, customer part number, Murata part number, RoHS marking (*2), quantity, etc.

9.8 Specification of outer box

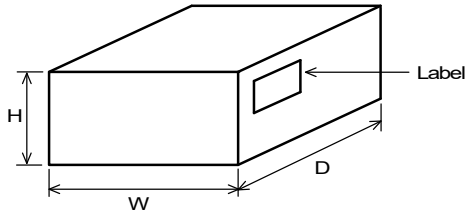

Reel	Dimensions of outer box (mm)			Standard reel quantity in outer box (reel)
	W	D	H	
ø180 mm	186	186	93	5
ø330 mm	340	340	95	5
* Above outer box size is typical. It depends on a quantity of an order.				

Downloaded from Arrow.com.

10. ⚠Caution

10.1 Limitation of applications

The products listed in the reference specification (hereinafter the product(s) is called as the “Product(s)”) are designed and manufactured for applications specified in the reference specification (hereinafter called as the “Specific Application”).
We shall not warrant anything in connection with the Products including fitness, performance, adequateness, safety, or quality, in the case of applications listed in from (1) to (11) written at the end of this precautions, which may generally require high performance, function, quality, management of production or safety. Therefore, the Product shall be applied in compliance with the specific application.
WE DISCLAIM ANY LOSS AND DAMAGES ARISING FROM OR IN CONNECTION WITH THE PRODUCTS INCLUDING BUT NOT LIMITED TO THE CASE SUCH LOSS AND DAMAGES CAUSED BY THE UNEXPECTED ACCIDENT, IN EVENT THAT (i) THE PRODUCT IS APPLIED FOR THE PURPOSE WHICH IS NOT SPECIFIED AS THE SPECIFIC APPLICATION FOR THE PRODUCT, AND/OR (ii) THE PRODUCT IS APPLIED FOR ANY FOLLOWING APPLICATION PURPOSES FROM (1) TO (11) (EXCEPT THAT SUCH APPLICATION PURPOSE IS UNAMBIGUOUSLY SPECIFIED AS SPECIFIC APPLICATION FOR THE PRODUCT IN OUR CATALOG SPECIFICATION FORMS, DATASHEETS, OR OTHER DOCUMENTS OFFICIALLY ISSUED BY US*).

(1) Aircraft equipment
(2) Aerospace equipment
(3) Undersea equipment
(4) Power plant control equipment
(5) Medical equipment
(6) Transportation equipment
(7) Traffic control equipment
(8) Disaster prevention/security equipment
(9) Industrial data-processing equipment
(10) Combustion/explosion control equipment
(11) Equipment with complexity and/or required reliability equivalent to the applications listed in the above.

For exploring information of the Products which will be compatible with the particular purpose other than those specified in the reference specification, please contact our sales offices, distribution agents, or trading companies with which you make a deal, or via our web contact form.
Contact form: https://www.murata.com/contactform

* We may design and manufacture particular Products for applications listed in (1) to (11). Provided that, in such case we shall unambiguously specify such Specific Application in the reference specification without any exception. Therefore, any other documents and/or performances, whether exist or non-exist, shall not be deemed as the evidence to imply that we accept the applications listed in (1) to (11).

10.2 Precautions on rating

Avoid using in exceeded the rated temperature range, rated voltage, or rated current.
Usage when the ratings are exceeded could lead to wire breakage, burning, or other serious fault.

10.3 Inrush current

If an inrush current (or pulse current or rush current) that significantly exceeds the rated current is applied to the product, overheating could occur, resulting in wire breakage, burning, or other serious fault.

10.4 Fail-safe

Be sure to provide an appropriate fail-safe function on your product to prevent a second damage that may be caused by the abnormal function or the failure of our product.

10.5 Corrosive gas

Please refrain from use since contact with environments with corrosive gases (sulfur gas [hydrogen sulfide, sulfur dioxide, etc.], chlorine, ammonia, etc.) or oils (cutting oil, silicone oil, etc.) that have come into contact with the previously stated corrosive gas environment will result in deterioration of product quality or an open from deterioration due to corrosion of product electrode, etc. We will not bear any responsibility for use under these environments.

Downloaded from Arrow.com.

11. Precautions for Use

This product is for use only with reflow soldering. It is designed to be mounted by soldering. If you want to use other mounting method, for example, using a conductive adhesive, please consult us beforehand.
Also, if repeatedly subjected to temperature cycles or other thermal stress, due to the difference in the coefficient of thermal expansion with the mounting substrate, the solder (solder fillet part) in the mounting part may crack.
The occurrence of cracks due to thermal stress is affected by the size of the land where mounted, the solder volume, and the heat dissipation of the mounting substrate. Carefully design it when a large change in ambient temperature is assumed.

11.1 Land dimensions

The following diagram shows the recommended land dimensions for reflow soldering.
The land dimensions are designed in consideration of electrical characteristics and mountability. Use of other land dimensions may preclude achievement of performance. In some cases, it may result in poor solderability, including positional shift. If you use other land pattern, consider it adequately.

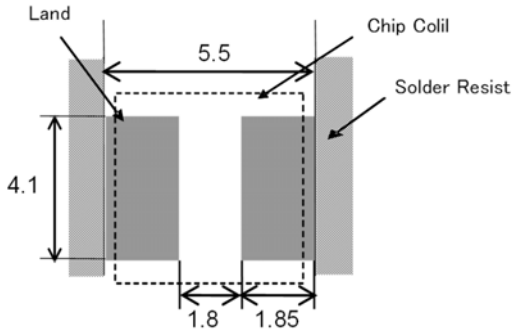

(in mm)

11.2 Flux and solder used

Flux	• Use a rosin-based flux. • Do not use a highly acidic flux with a halide content exceeding 0.2 mass% (chlorine conversion value). • Do not use a water-soluble flux.
Solder	• Use Sn-3.0Ag-0.5Cu solder. • Standard thickness of solder paste: 100 µm to 150 µm

If you want to use a flux other than the above, please consult our technical department.

Downloaded from Arrow.com.

11.3 Soldering conditions (reflow)

- Pre-heating should be in such a way that the temperature difference between solder and product surface is limited to 100°C max.
  Cooling into solvent after soldering also should be in such a way that the temperature difference is limited to 100°C max.
  Insufficient pre-heating may cause cracks on the product, resulting in the deterioration of product quality.
- Standard soldering profile and the limit soldering profile is as follows.
  The excessive limit soldering conditions may cause leaching of the electrode and/or resulting in the deterioration of product quality.

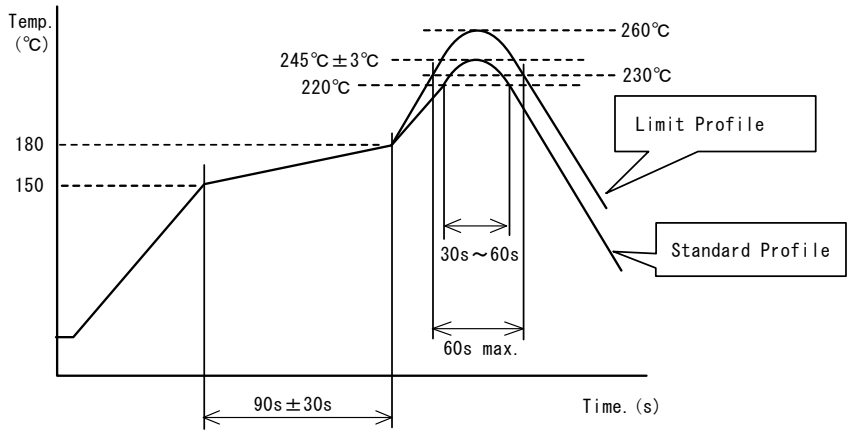

	Standard profile	Limit profile
Pre-heating	150°C to 180°C/90 s±30 s	150°C to 180°C/90 s±30 s
Heating	Above 220°C/30 s to 60 s	Above 230°C/60 s max.
Peak temperature	245°C±3°C	260°C/10 s
Number of reflow cycles	3 times	3 times

11.4 Reworking with soldering iron

The following requirements must be met to rework a soldered product using a soldering iron.

Item	Requirement
Pre-heating	150°C/approx. 1 min
Tip temperature of soldering iron	380°C max.
Power consumption of soldering iron	80 W max.
Tip diameter of soldering iron	ø3 mm max.
Soldering time	3 s (+1 s, -0 s)
Number of reworking operations	2 times max.
* Avoid a direct contact of the tip of the soldering iron with the product. Such a direction contact may cause cracks in the ceramic body due to thermal shock.	

11.5 Solder volume

Solder shall be used not to increase the volume too much.

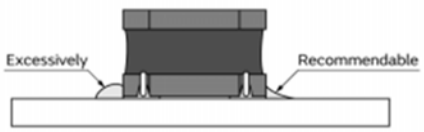

An increased solder volume increases mechanical stress on the product. Exceeding solder volume may cause the failure of mechanical or electrical performance.

Downloaded from Arrow.com.

11.6 Product's location

The following shall be considered when designing and laying out PCBs.

(1) PCB shall be designed so that products are not subject to mechanical stress due to warping the board.

[Products direction]

Products shall be located in the sideways direction to the mechanical stress.

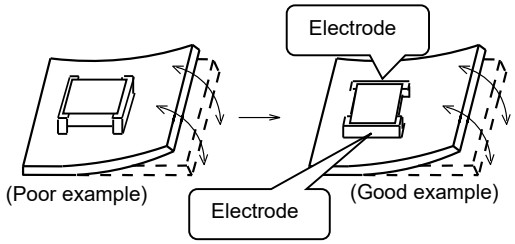

(2) Components location on PCB separation

It is effective to implement the following measures, to reduce stress in separating the board.

It is best to implement all of the following three measures; however, implement as many measures as possible to reduce stress.

Contents of measures	Stress level
(1) Turn the mounting direction of the component parallel to the board separation surface.	A > D*1
(2) Add slits in the board separation part.	A > B
(3) Keep the mounting position of the component away from the board separation surface.	A > C
*1 A > D is valid when stress is added vertically to the perforation as with hand separation. If a cutting disc is used, stress will be diagonal to the PCB, therefore A > D is invalid.	

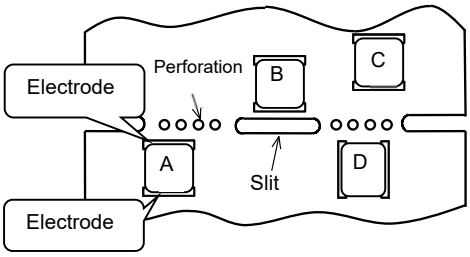

(3) Mounting components near screw holes

When a component is mounted near a screw hole, it may be affected by the board deflection that occurs during the tightening of the screw.

Mount the component in a position as far away from the screw holes as possible.

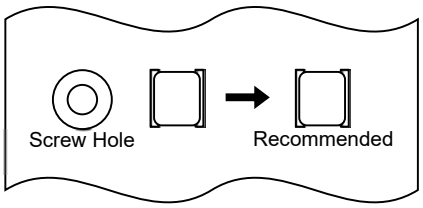

11.7 Handling of substrate

After mounting products on a substrate, do not apply any stress to the product caused by bending or twisting to the substrate when cropping the substrate, inserting and removing a connector from the substrate or tightening screw to the substrate. Excessive mechanical stress may cause cracking in the product.

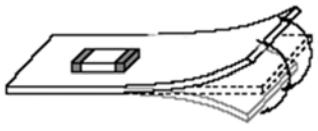

Bending

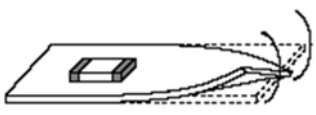

Twisting

Downloaded from Arrow.com.

11.8 Cleaning

The product shall be cleaned under the following conditions.

(1) The cleaning temperature shall be 60°C max. If isopropyl alcohol (IPA) is used, the cleaning temperature shall be 40°C max.

(2) Perform ultrasonic cleaning under the following conditions. Exercise caution to prevent resonance phenomenon in mounted products and the PCB.

Item	Requirement
Power	20 W/L max.
Time	5 min max.
Frequency	28 kHz to 40 kHz

(3) Cleaner

Alcohol-based cleaner: IPA

Aqueous agent: PINE ALPHA ST-100S

(4) There shall be no residual flux or residual cleaner. When using aqueous agent, rinse the product with deionized water adequately and completely dry it so that no cleaner is left.

* For other cleaning, consult our technical department.

11.9 Storage and transportation

Storage period	Use the product within 12 months after delivery. If you do not use the product for more than 12 months, check solderability before using it.
Storage conditions	• The products shall be stored in a room not subject to rapid changes in temperature and humidity. The recommended temperature range is -10°C to +40°C. The recommended relative humidity range is 15% to 85%. Keeping the product in corrosive gases, such as sulfur, chlorine gas or acid may cause the poor solderability. • Do not place the products directly on the floor; they should be placed on a palette so that they are not affected by humidity or dust. • Avoid keeping the products in a place exposed to direct sunlight, heat or vibration. • Do not keep products in bulk packaging. Bulk storage could result in collisions between the products or between the products and other parts, resulting in chipping or wire breakage. • Avoid storing the product by itself bare (i.e. exposed directly to air).
Transportation	Excessive vibration and impact reduces the reliability of the products. Exercise caution when handling the products.

11.10 Resin coating (including moisture-proof coating)

When the product is coated/molded with resin, its electrical characteristics may change.

A wire breakage issue may occur by mechanical stress caused by the resin, amount/cured shape of resin, or operating condition etc.

Some resins contain impurities or hydrolyzable chlorine, which could result in corrosion of the conducting materials, leading to wire breakage.

So, please pay your careful attention when you select resin in case of coating/molding the products with the resin.

Prior to use the coating resin, please make sure no reliability issue is observed by evaluating products mounted on your board.

11.11 Mounting conditions

Check the mounting condition before using.

Using mounting conditions (nozzles, equipment conditions, etc.) that are not suitable for products may lead to pick up errors, misalignment, or damage to the product.

11.12 Operating environment

Do not use this product under the following environmental conditions as it may cause deterioration of product quality.

(1) In the corrodible atmosphere such as acidic gases, alkaline gases, chlorine, sulfur gases, organic gases and etc. (the sea breeze, Cl2, H2S, NH3, SO2, NO2, etc)

(2) In the atmosphere where liquid such as organic solvent, may splash on the products.

(3) In the atmosphere where the temperature/humidity changes rapidly and it is easy to dew.

11.13 Mounting density

If this product is placed near heat-generating products, be sure to implement sufficient heat-dissipating measures.

If this product is subjected to a significant amount of heat from other products, this could adversely affect product quality, resulting in a circuit malfunction or failure of the mounted section. Also, be sure that the product is used in a manner so that the heat that the product is subjected to from other products does not exceed the upper limit of the rated operating temperature for the product.

Downloaded from Arrow.com.

11.14 Handling of product

- To prevent wire breakage, sharp objects such as tweezers, bristles of cleaning brushes, and other objects must not contact the winding section or the electrode section.
- Mechanical shock should not be applied to the products mounted on the board to prevent the breaking of the core.

12. ⚠Note

(1) Please make sure that your product has been evaluated in view of your specifications with our product being mounted to your product.
(2) You are requested not to use our product deviating from the reference specifications.
(3) The contents of this reference specification are subject to change without advance notice. Please approve our product specifications or transact the approval sheet for product specifications before ordering.

Downloaded from Arrow.com.