CUI Devices is now Same Sky! Learn More

SERIES: RDS-74R-254 | DESCRIPTION: ROTARY DIP SWITCH

FEATURES

- 10 and 16 positions
- flat actuator
- right angle
- 2.54 mm pitch

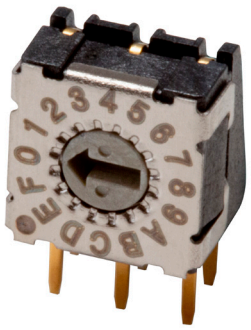

SPECIFICATIONS

parameter	conditions/description	min	typ	max	units
rated voltage	switching non-switching			42 42	Vdc Vdc
rated current	switching non-switching			100 400	mA mA
withstanding voltage	for 1 minute		250		Vac
contact resistance				80	mΩ
insulation resistance	at 250 Vdc	100			MΩ
operating torque		90	120	150	gf*cm
actuator travel	continuous rotation		360		degrees
operating temperature		-60		125	°C
storage temperature		-60		125	°C
life	at rated voltage, current, 15~20 cycles/minute		25,000		steps
flammability rating	UL94V-0				
RoHS	yes				
IP level	IP67 (IEC 60529:2001)				

SOLDERABILITY

parameter	conditions/description	min	typ	max	units
hand soldering	for maximum 3 seconds			350	°C
wave soldering	for maximum 5 seconds			280	°C

PART NUMBER KEY

RDS - XXS - 74R - 254 - D

Base Number

No. of Positions:
10 =10 Positions
16 =16 Positions

Downloaded from Arrow.com.

MECHANICAL DRAWING

units: mm
tolerance: ±0.3 mm
unless otherwise noted

ITEM	DESCRIPTION	MATERIAL	PLATING/COLOR
1	actuator	LCP (UL94V-0)	red (10 position) gray (16 position)
2	housing	LCP (UL94V-0)	black
3	face plate	stainless steel	
4	terminals	copper alloy	gold

ON ○					
OFF ●			CODE		
TYPE	POS	1	2	4	8
10 STEP	0	●	●	●	●
	1	○	●	●	●
	2	●	○	●	●
	3	○	○	●	●
	4	●	●	○	●
	5	○	●	○	●
	6	●	○	○	●
	7	○	○	○	●
	8	●	●	●	○
	9	○	●	●	○
16 STEP	A	●	○	●	○
	B	○	○	●	○
	C	●	●	○	○
	D	○	●	○	○
	E	●	○	○	○
	F	○	○	○	○

10 POSITION

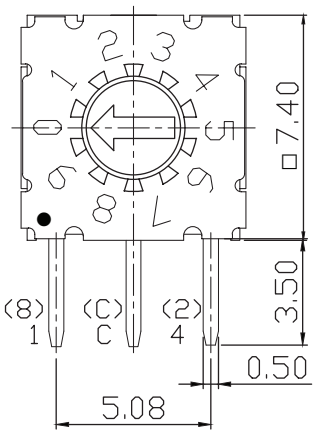

16 POSITION

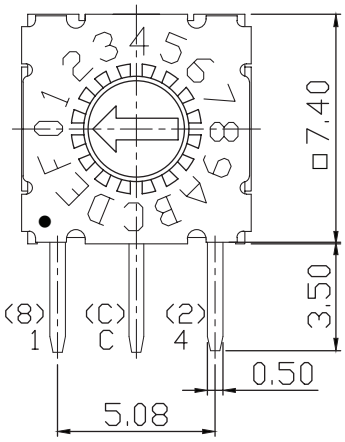

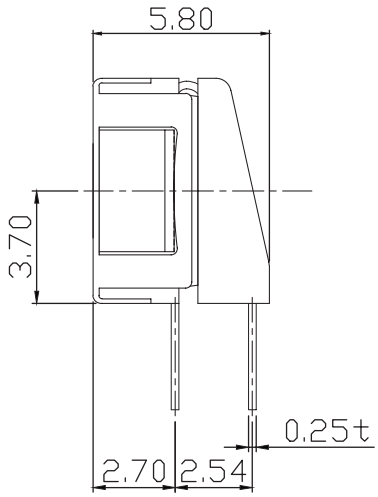

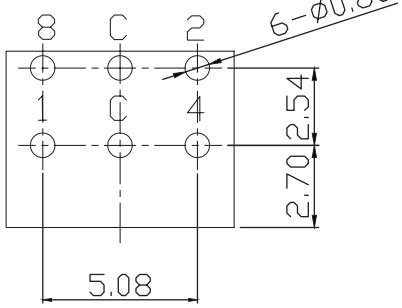

Recommended PCB Layout
Top View

Downloaded from Arrow.com.

PACKAGING

units: mm

Tube Size: 15.30 x 13.30 x 540 mm
Tube QTY: 70 pcs

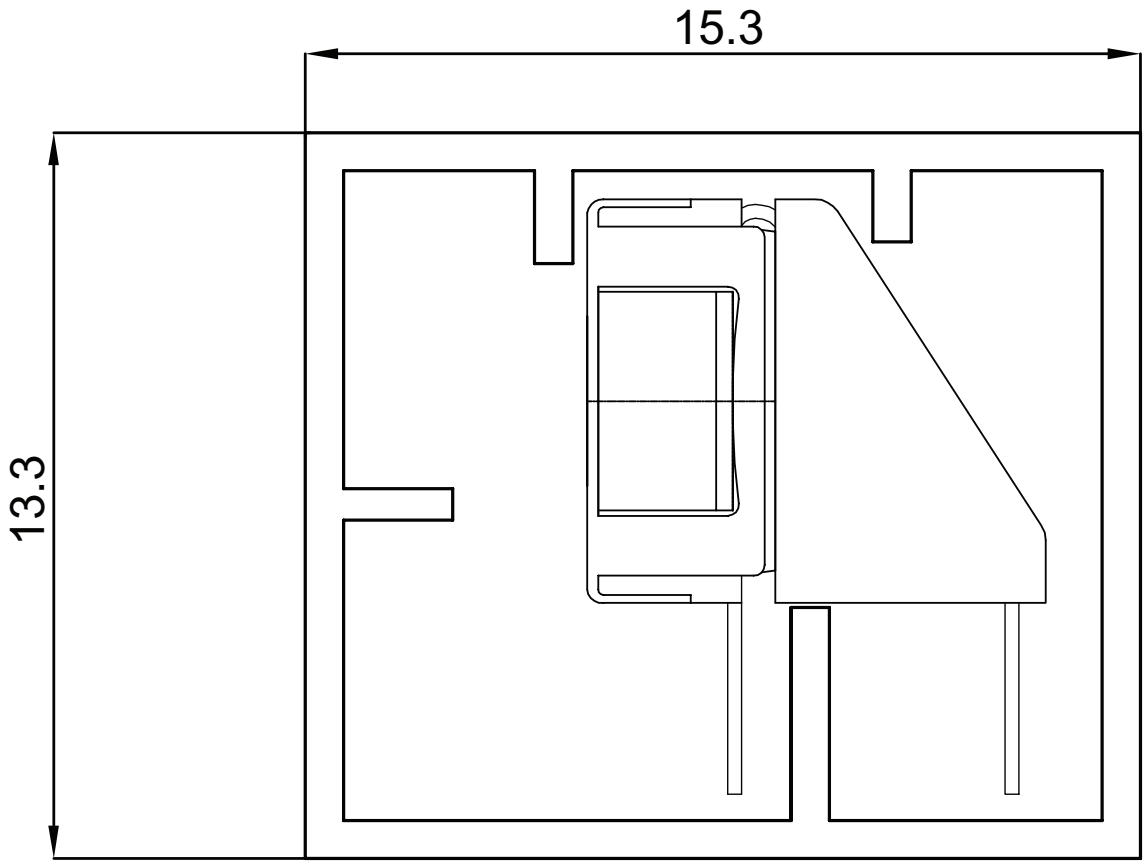

Downloaded from Arrow.com.

REVISION HISTORY

rev.	description	date
1.0	initial release	10/01/2020
1.01	logo, datasheet style update	08/05/2022
1.02	CUI Devices rebranded to Same Sky	09/12/2024

The revision history provided is for informational purposes only and is believed to be accurate.

Same Sky offers a one (1) year limited warranty. Complete warranty information is listed on our website.

Same Sky reserves the right to make changes to the product at any time without notice. Information provided by Same Sky is believed to be accurate and reliable. However, no responsibility is assumed by Same Sky for its use, nor for any infringements of patents or other rights of third parties which may result from its use.

Same Sky products are not authorized or warranted for use as critical components in equipment that requires an extremely high level of reliability. A critical component is any component of a life support device or system whose failure to perform can be reasonably expected to cause the failure of the life support device or system, or to affect its safety or effectiveness.

Downloaded from Arrow.com.