THIS DRAWING IS UNPUBLISHED. RELEASED FOR PUBLICATION 20
© COPYRIGHT 20 BY - ALL RIGHTS RESERVED.

REVISIONS

P	LTR	DESCRIPTION	DATE	DWN	APVD
	A	INITIAL RELEASE	08MAY2015	DL	CW
	A1	ECR-16-018055	21DEC2016	DL	CW

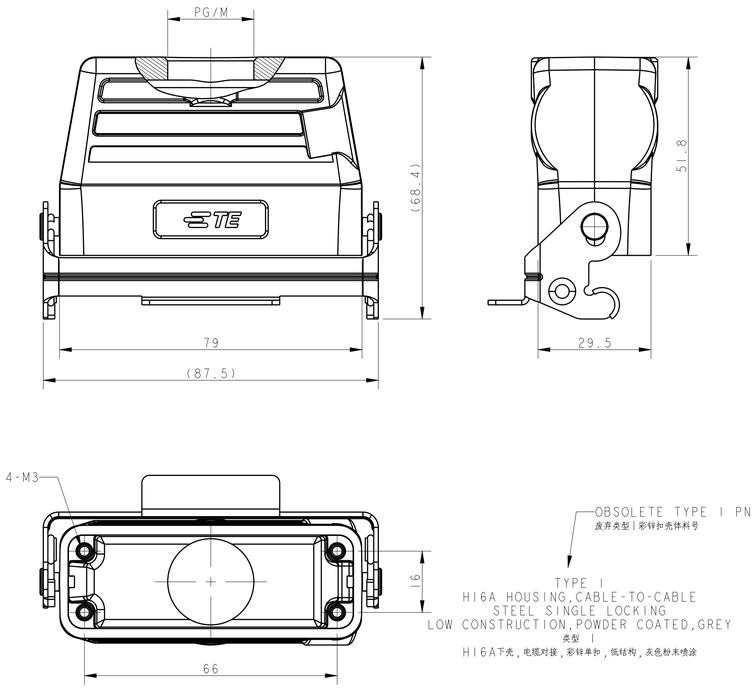

OBSOLETE TYPE 1 PN
废弃类型1彩锌扣壳体料号

TYPE 1
H16A HOUSING,CABLE-TO-CABLE
STEEL SINGLE LOCKING
LOW CONSTRUCTION,POWDER COATED,GREY
类型 1
H16A下壳，电缆对接，彩锌单扣，低结构，灰色粉末喷涂

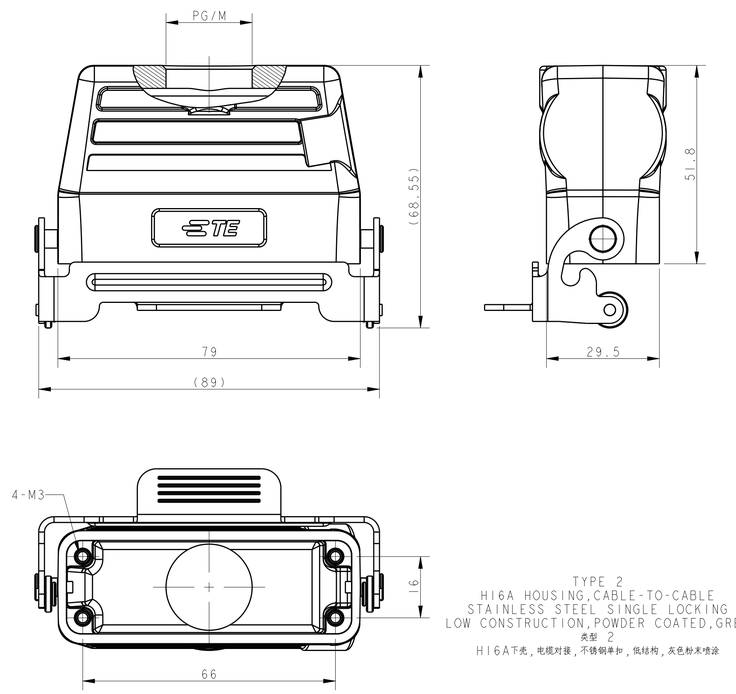

TYPE 2
H16A HOUSING,CABLE-TO-CABLE
STAINLESS STEEL SINGLE LOCKING
LOW CONSTRUCTION,POWDER COATED,GREY
类型 2
H16A下壳，电缆对接，不锈钢单扣，低结构，灰色粉末喷涂

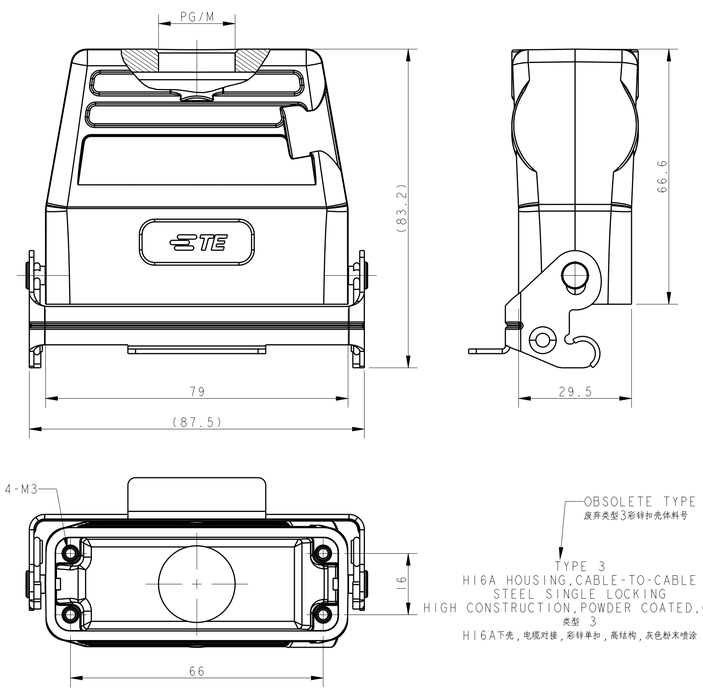

OBSOLETE TYPE 3 PN
废弃类型3彩锌扣壳体料号

TYPE 3
H16A HOUSING,CABLE-TO-CABLE
STEEL SINGLE LOCKING
HIGH CONSTRUCTION,POWDER COATED,GREY
类型 3
H16A下壳，电缆对接，彩锌单扣，高结构，灰色粉末喷涂

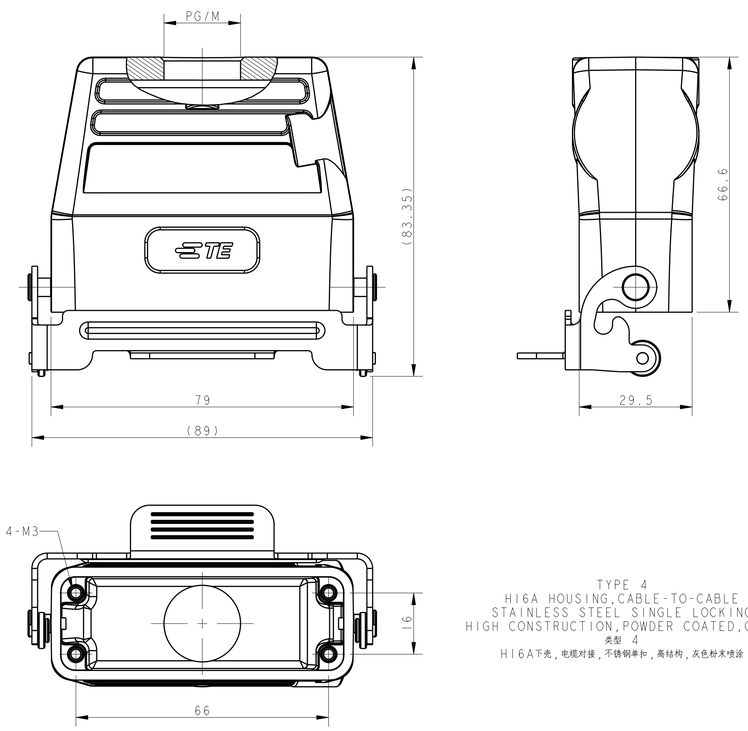

TYPE 4
H16A HOUSING,CABLE-TO-CABLE
STAINLESS STEEL SINGLE LOCKING
HIGH CONSTRUCTION,POWDER COATED,GREY
类型 4
H16A下壳，电缆对接，不锈钢单扣，高结构，灰色粉末喷涂

	PART NUMBER 料号	PART DESCRIPTION 描述		PG/M THREAD PG/M螺纹孔	TYPE 类型
OBSOLETE	~~1-1739160116-000~~	~~H16A-TBF-PG16~~	H16A HOUSING,CABLE-TO-CABLE STEEL SINGLE LOCKING LOW CONSTRUCTION,POWDER COATED,GREY H16A下壳，电缆对接，彩锌单扣，低结构，灰色粉末喷涂	~~PG16~~	TYPE 1
OBSOLETE	~~1-1739160120-000~~	~~H16A-TBF-M20~~		~~M20~~	
OBSOLETE	~~1-1739160121-000~~	~~H16A-TBF-PG21~~		~~PG21~~	
OBSOLETE	~~1-1739160125-000~~	~~H16A-TBF-M25~~		~~M25~~	
	1-1739161116-000	H16A-TBFS-PG16	H16A HOUSING,CABLE-TO-CABLE STAINLESS STEEL SINGLE LOCKING LOW CONSTRUCTION,POWDER COATED,GREY H16A下壳，电缆对接，不锈钢单扣，低结构，灰色粉末喷涂	PG16	TYPE 2
	1-1739161120-000	H16A-TBFS-M20		M20	
	1-1739161121-000	H16A-TBFS-PG21		PG21	
	1-1739161125-000	H16A-TBFS-M25		M25	
OBSOLETE	~~1-1779160116-000~~	~~H16A-TBFH-PG16~~	H16A HOUSING,CABLE-TO-CABLE STEEL SINGLE LOCKING HIGH CONSTRUCTION,POWDER COATED,GREY H16A下壳，电缆对接，彩锌单扣，高结构，灰色粉末喷涂	~~PG16~~	TYPE 3
OBSOLETE	~~1-1779160120-000~~	~~H16A-TBFH-M20~~		~~M20~~	
OBSOLETE	~~1-1779160121-000~~	~~H16A-TBFH-PG21~~		~~PG21~~	
OBSOLETE	~~1-1779160125-000~~	~~H16A-TBFH-M25~~		~~M25~~	
	1-1779161116-000	H16A-TBFHS-PG16	H16A HOUSING,CABLE-TO-CABLE STAINLESS STEEL SINGLE LOCKING HIGH CONSTRUCTION,POWDER COATED,GREY H16A下壳，电缆对接，不锈钢单扣，高结构，灰色粉末喷涂	PG16	TYPE 4
	1-1779161120-000	H16A-TBFHS-M20		M20	
	1-1779161121-000	H16A-TBFHS-PG21		PG21	
	1-1779161125-000	H16A-TBFHS-M25		M25	

NOTES:
1. TECHNICAL CHARACTERISTICS:
   BODY MATERIAL: DIE CAST ALUMINIUM ALLOY
   SURFACE TREATMENT: POWDER-COATED, GRAY
   DEGREE OF PROTECTION: IP65 (MATED)

注释：
1. 技术参数：
   主体材料： 铝合金
   表面处理： 粉末喷涂， 灰色
   防护等级： IP65(配合)

THIS DRAWING IS A CONTROLLED DOCUMENT.

DIMENSIONS: mm

TOLERANCES UNLESS OTHERWISE SPECIFIED:
0 PLC ±-
1 PLC ±-
2 PLC ±-
3 PLC ±-
4 PLC ±-
ANGLES ±-

MATERIAL -
FINISH -

DWN DAVID LI 08MAY2015
CHK CHRIS WANG 08MAY2015
APVD XU XIANG 08MAY2015
PRODUCT SPEC 108-137010
APPLICATION SPEC 114-137010
WEIGHT -

TE Connectivity

NAME H16A-TBF*/TBFH*-PG/M

SIZE A1 | CAGE CODE - | DRAWING NO C-1-1739161116-000 | RESTRICTED TO -

CUSTOMER DRAWING | SCALE 5:4 | SHEET 1 OF 1 | REV A1

4805 (3/13)

Downloaded from Arrow.com.