ON Semiconductor

Is Now

To learn more about onsemi™, please visit our website at
www.onsemi.com

onsemi and onsemi and other names, marks, and brands are registered and/or common law trademarks of Semiconductor Components Industries, LLC dba "**onsemi**" or its affiliates and/or subsidiaries in the United States and/or other countries. **onsemi** owns the rights to a number of patents, trademarks, copyrights, trade secrets, and other intellectual property. A listing of **onsemi** product/patent coverage may be accessed at www.onsemi.com/site/pdf/Patent-Marking.pdf. **onsemi** reserves the right to make changes at any time to any products or information herein, without notice. The information herein is provided "as-is" and **onsemi** makes no warranty, representation or guarantee regarding the accuracy of the information, product features, availability, functionality, or suitability of its products for any particular purpose, nor does **onsemi** assume any liability arising out of the application or use of any product or circuit, and specifically disclaims any and all liability, including without limitation special, consequential or incidental damages. Buyer is responsible for its products and applications using **onsemi** products, including compliance with all laws, regulations and safety requirements or standards, regardless of any support or applications information provided by **onsemi**. "Typical" parameters which may be provided in **onsemi** data sheets and/or specifications can and do vary in different applications and actual performance may vary over time. All operating parameters, including "Typicals" must be validated for each customer application by customer's technical experts. **onsemi** does not convey any license under any of its intellectual property rights nor the rights of others. **onsemi** products are not designed, intended, or authorized for use as a critical component in life support systems or any FDA Class 3 medical devices or medical devices with a same or similar classification in a foreign jurisdiction or any devices intended for implantation in the human body. Should Buyer purchase or use **onsemi** products for any such unintended or unauthorized application, Buyer shall indemnify and hold **onsemi** and its officers, employees, subsidiaries, affiliates, and distributors harmless against all claims, costs, damages, and expenses, and reasonable attorney fees arising out of, directly or indirectly, any claim of personal injury or death associated with such unintended or unauthorized use, even if such claim alleges that **onsemi** was negligent regarding the design or manufacture of the part. **onsemi** is an Equal Opportunity/Affirmative Action Employer. This literature is subject to all applicable copyright laws and is not for resale in any manner. Other names and brands may be claimed as the property of others.

Downloaded from Arrow.com.

KAI-16070

4864 (H) x 3232 (V) Interline CCD Image Sensor

ON Semiconductor®

www.onsemi.com

Figure 1. KAI−16070 CCD Image Sensor

Description

The KAI−16070 Image Sensor is a 16−megapixel CCD in a 35 mm optical format. Based on the TRUESENSE 7.4 micron Interline Transfer CCD Platform, the sensor provides very high smear rejection and up to 82 dB linear dynamic range through the use of a unique dual−gain amplifier. Flexible readout architecture enables use of 1, 2, or 4 outputs for full resolution readout up to 8 frames per second, while a vertical overflow drain structure suppresses image blooming and enables electronic shuttering for precise exposure control.

The sensor is available with the TRUESENSE Sparse Color Filter Pattern, a technology which provides a 2x improvement in light sensitivity compared to a standard color Bayer part.

The sensor shares common pin−out and electrical configurations with a full family of ON Semiconductor Interline Transfer CCD image sensors, allowing a single camera design to be leveraged in support of multiple devices.

Table 1. GENERAL SPECIFICATIONS

Parameter	Typical Value
Architecture	Interline CCD; Progressive Scan
Total Number of Pixels	4932 (H) x 3300 (V)
Number of Effective Pixels	4888 (H) x 3256 (V)
Number of Active Pixels	4864 (H) x 3232 (V) (15.7 M)
Pixel Size	7.4 μm (H) x 7.4 μm (V)
Active Image Size	36.0 mm (H) x 23.9 mm (V) 43.2 mm (diag.) 35 mm Optical Format
Aspect Ratio	3:2
Number of Outputs	1, 2, or 4
Charge Capacity	44,000 electrons
Output Sensitivity	9.7 μV/e$^-$ (low), 33 μV/e$^-$ (high)
Quantum Efficiency Mono (−AAA) Mono (−AXA, −PXA, −QXA) R, G, B (−CXA) R, G, B (−FXA)	 10% 48% 32%, 41%, 39% 33%, 40%, 40%
Base ISO −AXA −CXA, −PXA −FXA, −PXA	 350 130, 310 (respectively) 130, 310 (respectively)
Read Noise (f = 40 MHz)	12 electrons rms
Dark Current Photodiode / VCCD	 1 / 145 electrons/s
Dark Current Doubling Temp. Photodiode / VCCD	 7°C / 9°C
Dynamic Range High Gain Amp (40 MHz) Dual Amp, 2x2 Bin (40 MHz)	 70 dB 82 dB
Charge Transfer Efficiency	0.999999
Blooming Suppression	> 1000 X
Smear	−115 dB
Image Lag	< 10 electrons
Maximum Pixel Clock Speed	40 MHz
Maximum Frame Rates Quad / Dual / Single Output	 8 / 4 / 2 fps
Package	72 pin PGA
Cover Glass	AR Coated, 2 Sides or Clear Glass

NOTE: All parameters are specified at T = 40°C unless otherwise noted.

Features

- Superior Smear Rejection
- Up to 82 dB Linear Dynamic Range
- Bayer Color Pattern, TRUESENSE Sparse Color Filter Pattern, and Monochrome Configurations
- Progressive Scan & Flexible Readout Architecture
- High Frame Rate
- High Sensitivity − Low Noise Architecture
- Package Pin Reserved for Device Identification

Applications

- Industrial Imaging and Inspection
- Traffic
- Aerial Photography

ORDERING INFORMATION

See detailed ordering and shipping information on page 2 of this data sheet.

© Semiconductor Components Industries, LLC, 2015

November, 2016 − Rev. 4

Publication Order Number:
KAI−16070/D

Downloaded from Arrow.com.

ORDERING INFORMATION

Table 2. ORDERING INFORMATION

Part Number	Description	Marking Code
KAI−16070−AAA−JP−B1	Monochrome, No Microlens, PGA Package, Taped Clear Cover Glass, no coatings, Standard Grade	KAI−16070−AAA Serial Number
KAI−16070−AAA−JP−AE	Monochrome, No Microlens, PGA Package, Taped Clear Cover Serial Number Glass, no coatings, Engineering Grade	
KAI−16070−AXA−JD−B1	Monochrome, Special Microlens, PGA Package, Sealed Clear Cover Glass with AR coating (both sides), Grade 1	KAI−16070−AXA Serial Number
KAI−16070−AXA−JD−B2	Monochrome, Special Microlens, PGA Package, Sealed Clear Cover Glass with AR coating (both sides), Grade 2	
KAI−16070−AXA−JD−AE	Monochrome, Special Microlens, PGA Package, Sealed Clear Cover Glass with AR coating (both sides), Engineering Grade	
KAI−16070−FXA−JD−B1	Gen2 Color (Bayer RGB), Special Microlens, PGA Package, Sealed Clear Cover Glass with AR coating (both sides), Grade 1	KAI−16070−FXA Serial Number
KAI−16070−FXA−JD−B2	Gen2 Color (Bayer RGB), Special Microlens, PGA Package, Sealed Clear Cover Glass with AR coating (both sides), Grade 2	
KAI−16070−FXA−JD−AE	Gen2 Color (Bayer RGB), Special Microlens, PGA Package, Sealed Clear Cover Glass with AR coating (both sides), Engineering Grade	
KAI−16070−QXA−JD−B1	Gen2 Color (TRUESENSE Sparse CFA), Special Microlens, PGA Package, Sealed Clear Cover Glass with AR coating (both sides), Grade 1	KAI−16070−QXA Serial Number
KAI−16070−QXA−JD−B2	Gen2 Color (TRUESENSE Sparse CFA), Special Microlens, PGA Package, Sealed Clear Cover Glass with AR coating (both sides), Grade 2	
KAI−16070−QXA−JD−AE	Gen2 Color (TRUESENSE Sparse CFA), Special Microlens, PGA Package, Sealed Clear Cover Glass with AR coating (both sides), Engineering Grade	
KAI−16070−CXA−JD−B1*	Gen1 Color (Bayer RGB), Special Microlens, PGA Package, Sealed Clear Cover Glass with AR coating (both sides), Grade 1	KAI−16070−CXA Serial Number
KAI−16070−CXA−JD−B2*	Gen1 Color (Bayer RGB), Special Microlens, PGA Package, Sealed Clear Cover Glass with AR coating (both sides), Grade 2	
KAI−16070−CXA−JD−AE*	Gen1 Color (Bayer RGB), Special Microlens, PGA Package, Sealed Clear Cover Glass with AR coating (both sides), Engineering Grade	
KAI−16070−PXA−JD−B1*	Gen1 Color (TRUESENSE Sparse CFA), Special Microlens, PGA Package, Sealed Clear Cover Glass with AR coating (both sides), Grade 1	KAI−16070−PXA Serial Number
KAI−16070−PXA−JD−B2*	Gen1 Color (TRUESENSE Sparse CFA), Special Microlens, PGA Package, Sealed Clear Cover Glass with AR coating (both sides), Grade 2	
KAI−16070−PXA−JD−AE*	Gen1 Color (TRUESENSE Sparse CFA), Special Microlens, PGA Package, Sealed Clear Cover Glass with AR coating (both sides), Engineering Grade	

*Not recommended for new designs.

See the ON Semiconductor *Device Nomenclature* document (TND310/D) for a full description of the naming convention used for image sensors. For reference documentation, including information on evaluation kits, please visit our web site at www.onsemi.com.

Downloaded from Arrow.com.

DEVICE DESCRIPTION

Architecture

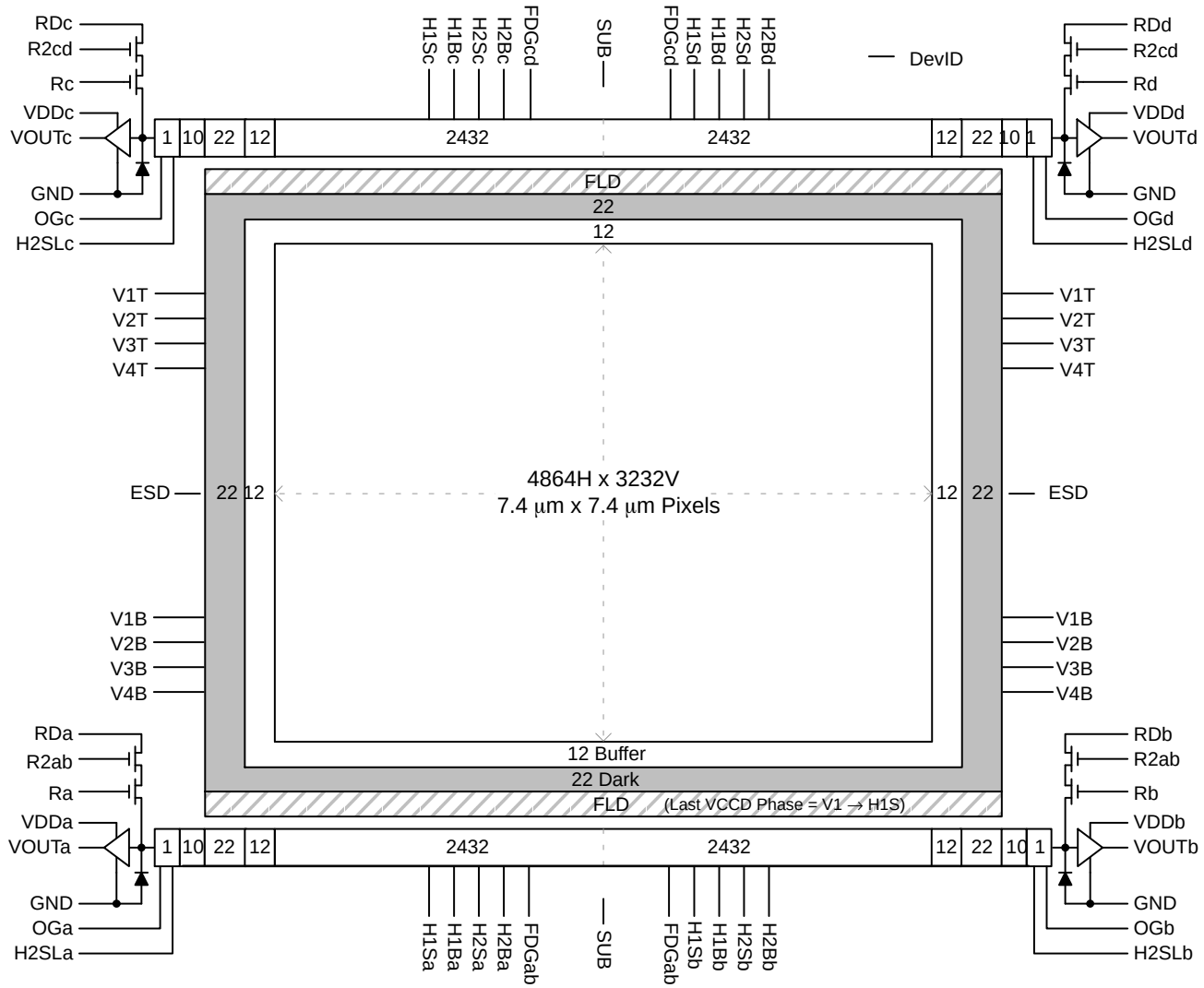

Figure 2. Block Diagram

Dark Reference Pixels

There are 22 dark reference rows at the top and 22 dark rows at the bottom of the image sensor. The dark rows are not entirely dark and so should not be used for a dark reference level. Use the 22 dark columns on the left or right side of the image sensor as a dark reference.

Under normal circumstances use only the center 20 columns of the 22 column dark reference due to potential light leakage.

Dummy Pixels

Within each horizontal shift register there are 11 leading additional shift phases. These pixels are designated as dummy pixels and should not be used to determine a dark reference level.

In addition, there is one dummy row of pixels at the top and bottom of the image.

Active Buffer Pixels

12 unshielded pixels adjacent to any leading or trailing dark reference regions are classified as active buffer pixels. These pixels are light sensitive but are not tested for defects and non−uniformities.

Image Acquisition

An electronic representation of an image is formed when incident photons falling on the sensor plane create electron−hole pairs within the individual silicon photodiodes. These photoelectrons are collected locally by the formation of potential wells at each photosite. Below photodiode saturation, the number of photoelectrons collected at each pixel is linearly dependent upon light level and exposure time and non−linearly dependent on wavelength. When the photodiodes charge capacity is reached, excess electrons are discharged into the substrate to prevent blooming.

Downloaded from Arrow.com.

ESD Protection

Adherence to the power−up and power−down sequence is critical. Failure to follow the proper power−up and power−down sequences may cause damage to the sensor. See Power−Up and Power−Down Sequence section.

Bayer Color Filter Pattern

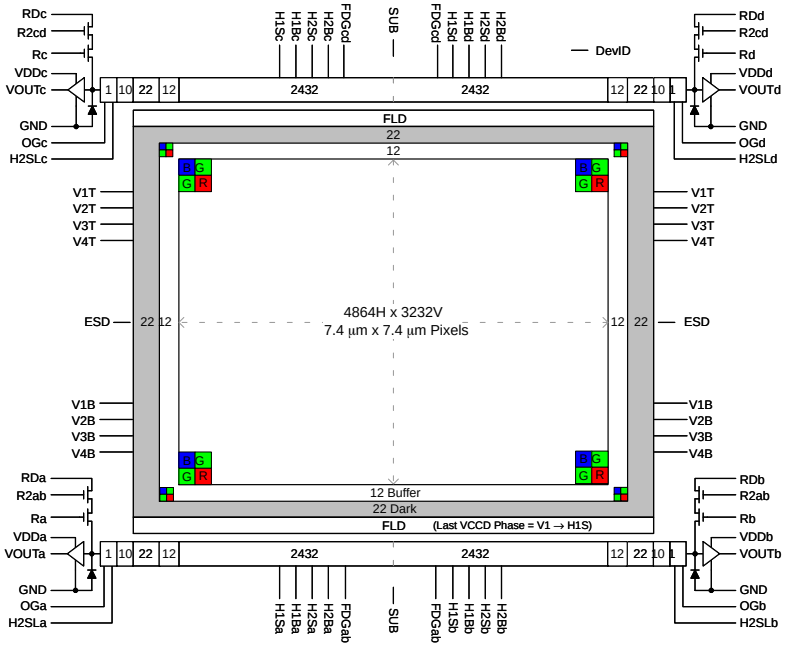

Figure 3. Bayer Color Filter Pattern

TRUESENSE Sparse Color Filter Pattern

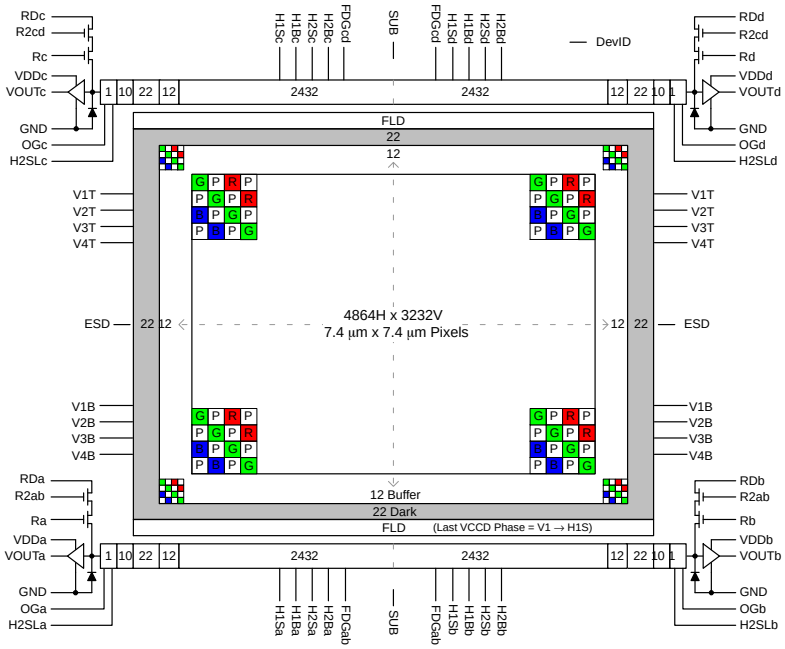

Figure 4. TRUESENSE Sparse Color Filter Pattern

Downloaded from Arrow.com.

PHYSICAL DESCRIPTION

Pin Description and Device Orientation

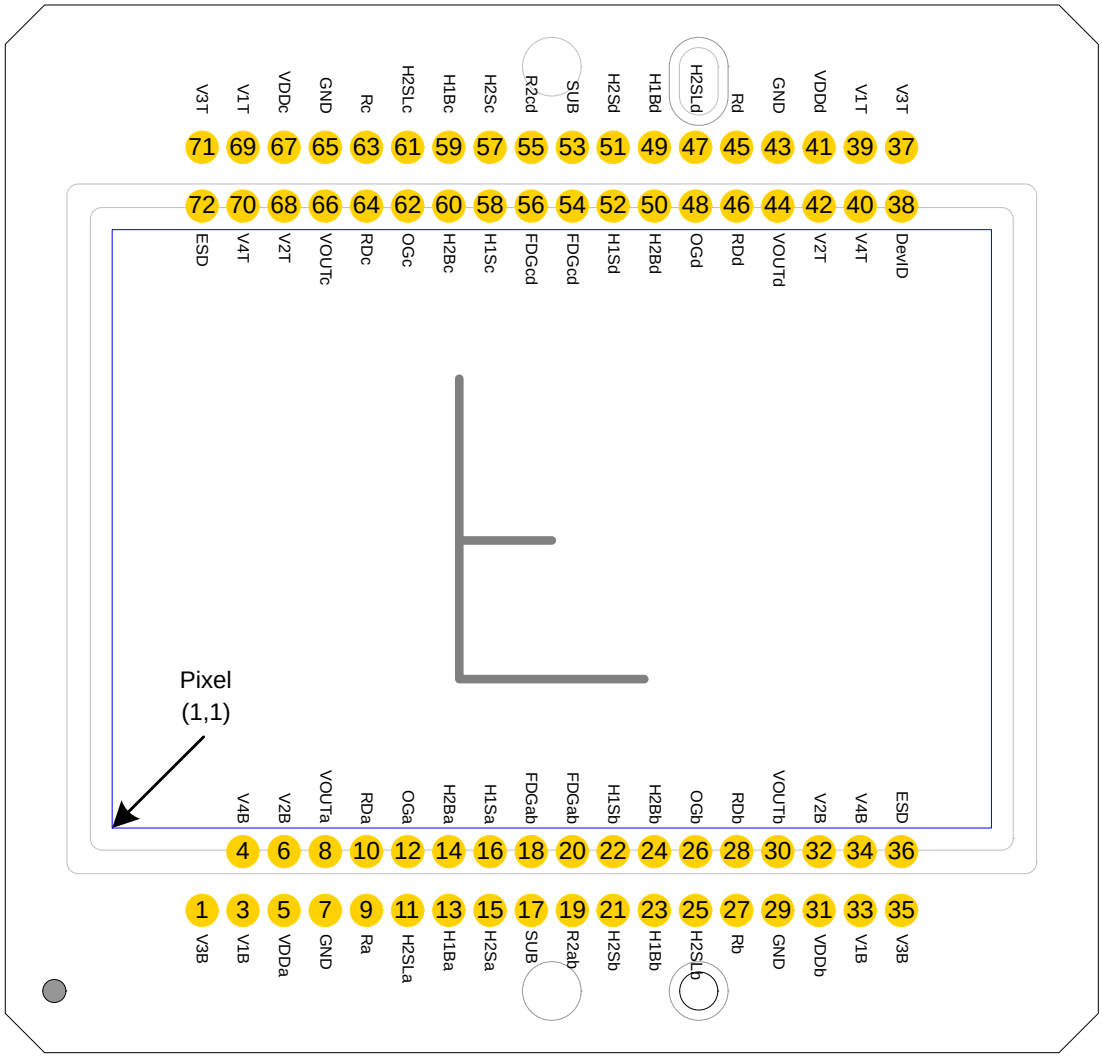

Figure 5. Package Pin Designations − Top View

Downloaded from Arrow.com.

Table 3. PIN DESCRIPTION

Pin	Name	Description
1	V3B	Vertical CCD Clock, Phase 3, Bottom
[2]		[No Pin − Keyed]
3	V1B	Vertical CCD Clock, Phase 1, Bottom
4	V4B	Vertical CCD Clock, Phase 4, Bottom
5	VDDa	Output Amplifier Supply, Quadrant a
6	V2B	Vertical CCD Clock, Phase 2, Bottom
7	GND	Ground
8	VOUTa	Video Output, Quadrant a
9	Ra	Reset Gate, Standard (High) Gain, Quadrant a
10	RDa	Reset Drain, Quadrant a
11	H2SLa	Horizontal CCD Clock, Phase 2, Storage, Last Phase, Quadrant a
12	OGa	Output Gate, Quadrant a
13	H1Ba	Horizontal CCD Clock, Phase 1, Barrier, Quadrant a
14	H2Ba	Horizontal CCD Clock, Phase 2, Barrier, Quadrant a
15	H2Sa	Horizontal CCD Clock, Phase 2, Storage, Quadrant a
16	H1Sa	Horizontal CCD Clock, Phase 1, Storage, Quadrant a
17	SUB	Substrate
18	FDGab	Fast Line Dump Gate, Bottom
19	R2ab	Reset Gate, Low Gain, Quadrants a & b
20	FDGab	Fast Line Dump Gate, Bottom
21	H2Sb	Horizontal CCD Clock, Phase 2, Storage, Quadrant b
22	H1Sb	Horizontal CCD Clock, Phase 1, Storage, Quadrant b
23	H1Bb	Horizontal CCD Clock, Phase 1, Barrier, Quadrant b
24	H2Bb	Horizontal CCD Clock, Phase 2, Barrier, Quadrant b
25	H2SLb	Horizontal CCD Clock, Phase 2, Storage, Last Phase, Quadrant b
26	OGb	Output Gate, Quadrant b
27	Rb	Reset Gate, Standard (High) Gain, Quadrant b
28	RDb	Reset Drain, Quadrant b
29	GND	Ground
30	VOUTb	Video Output, Quadrant b
31	VDDb	Output Amplifier Supply, Quadrant b
32	V2B	Vertical CCD Clock, Phase 2, Bottom
33	V1B	Vertical CCD Clock, Phase 1, Bottom
34	V4B	Vertical CCD Clock, Phase 4, Bottom
35	V3B	Vertical CCD Clock, Phase 3, Bottom
36	ESD	ESD Protection Disable
72	ESD	ESD Protection Disable
71	V3T	Vertical CCD Clock, Phase 3, Top
70	V4T	Vertical CCD Clock, Phase 4, Top
69	V1T	Vertical CCD Clock, Phase 1, Top
68	V2T	Vertical CCD Clock, Phase 2, Top
67	VDDc	Output Amplifier Supply, Quadrant c
66	VOUTc	Video Output, Quadrant c
65	GND	Ground
64	RDc	Reset Drain, Quadrant c
63	Rc	Reset Gate, Standard (High) Gain, Quadrant c
62	OGc	Output Gate, Quadrant c
61	H2SLc	Horizontal CCD Clock, Phase 2, Storage, Last Phase, Quadrant c
60	H2Bc	Horizontal CCD Clock, Phase 2, Barrier, Quadrant c
59	H1Bc	Horizontal CCD Clock, Phase 1, Barrier, Quadrant c
58	H1Sc	Horizontal CCD Clock, Phase 1, Storage, Quadrant c
57	H2Sc	Horizontal CCD Clock, Phase 2, Storage, Quadrant c
56	FDGcd	Fast Line Dump Gate, Top
55	R2cd	Reset Gate, Low Gain, Quadrants c & d
54	FDGcd	Fast Line Dump Gate, Top
53	SUB	Substrate
52	H1Sd	Horizontal CCD Clock, Phase 1, Storage, Quadrant d
51	H2Sd	Horizontal CCD Clock, Phase 2, Storage, Quadrant d
50	H2Bd	Horizontal CCD Clock, Phase 2, Barrier, Quadrant d
49	H1Bd	Horizontal CCD Clock, Phase 1, Barrier, Quadrant d
48	OGd	Output Gate, Quadrant d
47	H2SLd	Horizontal CCD Clock, Phase 2, Storage, Last Phase, Quadrant d
46	RDd	Reset Drain, Quadrant d
45	Rd	Reset Gate, Standard (High) Gain, Quadrant d
44	VOUTd	Video Output, Quadrant d
43	GND	Ground
42	V2T	Vertical CCD Clock, Phase 2, Top
41	VDDd	Output Amplifier Supply, Quadrant d
40	V4T	Vertical CCD Clock, Phase 4, Top
39	V1T	Vertical CCD Clock, Phase 1, Top
38	DevID	Device Identification
37	V3T	Vertical CCD Clock, Phase 3, Top

1. Liked named pins are internally connected and should have a common drive signal.

Downloaded from Arrow.com.

IMAGING PERFORMANCE

Table 4. TYPICAL OPERATION CONDITIONS

Unless otherwise noted, the Imaging Performance Specifications are measured using the following conditions.

Description	Condition	Notes
Light Source	Continuous red, green and blue LED illumination	For monochrome sensor, only green LED used.
Operation	Nominal operating voltages and timing	

Table 5. SPECIFICATIONS − ALL CONFIGURATIONS

Description	Symbol	Min.	Nom.	Max.	Units	Sampling Plan	Temperature Tested At (°C)	Notes
Dark Field Global Non−Uniformity	DSNU	−	−	5	mVpp	Die	27, 40	
Bright Field Global Non−Uniformity		−	2	12	%rms	Die	27, 40	1
Bright Field Global Peak to Peak Non−Uniformity	PRNU	−	10	30	%pp	Die	27, 40	1
Bright Field Center Non−Uniformity		−	1	2	%rms	Die	27, 40	1
Maximum Photo−response Nonlinearity High Gain (4,000 to 20,000 electrons) High Gain (4,000 to 40,000 electrons) Low Gain (8,000 to 80,000 electrons)	 NL_HG1 NL_HG2 NL_LG1	 − − −	 2 3 6	 − − −	%	Design		2
Maximum Gain Difference Between Outputs	ΔG	−	10	−	%	Design		2
Horizontal CCD Charge Capacity	HNe	−	90	−	ke^-	Design		
Vertical CCD Charge Capacity	VNe	−	60	−	ke^-	Design		
Photodiode Charge Capacity	PNe	−	44	−	ke^-	Die	27, 40	3
Floating Diffusion Capacity − High Gain	Fne_HG	40	−	−	ke^-	Die	27, 40	
Floating Diffusion Capacity − Low Gain	Fne_LG	160	−	−	ke^-	Die	27, 40	
Linear Saturation Level − High Gain	Lsat_HG	−	40	−	ke^-	Design		
Linear Saturation Level − Low Gain	Lsat_LG	−	160	−	ke^-	Design		
Horizontal CCD Charge Transfer Efficiency	HCTE	0.999995	0.999999	−		Die		
Vertical CCD Charge Transfer Efficiency	VCTE	0.999995	0.999999	−		Die		
Photodiode Dark Current	Ipd	−	2	70	e/p/s	Die	40	
Vertical CCD Dark Current	Ivd	−	200	600	e/p/s	Die	40	
Image Lag	Lag	−	−	10	e^-	Design		
Antiblooming Factor	Xab	1000	−	−		Design		
Vertical Smear	Smr	−	−115	−	dB	Design		
Read Noise (High Gain / Low Gain)	n_{e-T}	−	12 / 45	−	e^-rms	Design		4
Dynamic Range, Standard	DR	−	70.5	−	dB	Design		4, 5
Dynamic Range, Extended Linear Dynamic Range Mode (XLDR)	XLDR	−	82.5	−	dB	Design		4, 5
Output Amplifier DC Offset	V_{odc}	5	9.0	14	V	Die	27, 40	
Output Amplifier Bandwidth	f_{-3db}	−	250	−	MHz	Design		6
Output Amplifier Impedance	R_{OUT}	100	127	200	Ω	Die	27, 40	
Output Amplifier Sensitivity High Gain Low Gain	ΔV/ΔN	 − −	 33 9.7	 − −	$\mu V/e^-$	Design		

1. Per color
2. Value is over the range of 10% to 90% of photodiode saturation.
3. The operating value of the substrate voltage, VAB, will be marked on the shipping container for each device. The value of VAB is set such that the photodiode charge capacity is 1450 mV. This value is determined while operating the device in the low gain mode. VAB level assigned is valid for both modes; high gain or low gain.
4. At 40 MHz
5. Uses 20LOG (PNe/ n_{e-T})
6. Assumes 5 pF load.

Downloaded from Arrow.com.

Table 6. KAI−16070−AAA CONFIGURATION WITH NO GLASS

Description	Symbol	Min.	Nom.	Max.	Units	Sampling Plan	Temperature Tested At (°C)	Notes
Peak Quantum Efficiency	QE_{max}	−	10	−	%	Design		1
Peak Quantum Efficiency Wavelength	λQE	−	500	−	nm	Design		1

1. Measurement taken without cover glass.

Table 7. KAI−16070−AXA, KAI−16070−PXA, AND KAI−16070−QXA CONFIGURATIONS

Description	Symbol	Min.	Nom.	Max.	Units	Sampling Plan	Temperature Tested At (°C)	Notes
Peak Quantum Efficiency	QE_{max}	−	48	−	%	Design		
Peak Quantum Efficiency Wavelength	λQE	−	500	−	nm	Design		

1. This color filter set configuration (Gen1) is not recommended for new designs.

Table 8. KAI−16070−FXA AND KAI−16070−QXA GEN2 COLOR CONFIGURATIONS WITH MAR GLASS

Description		Symbol	Min.	Nom.	Max.	Units	Sampling Plan	Temperature Tested At (°C)	Notes
Peak Quantum Efficiency	Blue Green Red	QE_{max}	−	40 40 34	−	%	Design		
Peak Quantum Efficiency Wavelength	Blue Green Red	λQE	−	460 535 605	−	nm	Design		

Table 9. KAI−16070−CXA AND KAI−16070−PXA GEN1 COLOR CONFIGURATIONS WITH MAR GLASS

Description		Symbol	Min.	Nom.	Max.	Units	Sampling Plan	Temperature Tested At (°C)	Notes
Peak Quantum Efficiency	Blue Green Red	QE_{max}	−	39 41 32	−	%	Design		1
Peak Quantum Efficiency Wavelength	Blue Green Red	λQE	−	470 540 620	−	nm	Design		1

1. This color filter set configuration (Gen1) is not recommended for new designs.

Downloaded from Arrow.com.

Linear Signal Range

High Gain

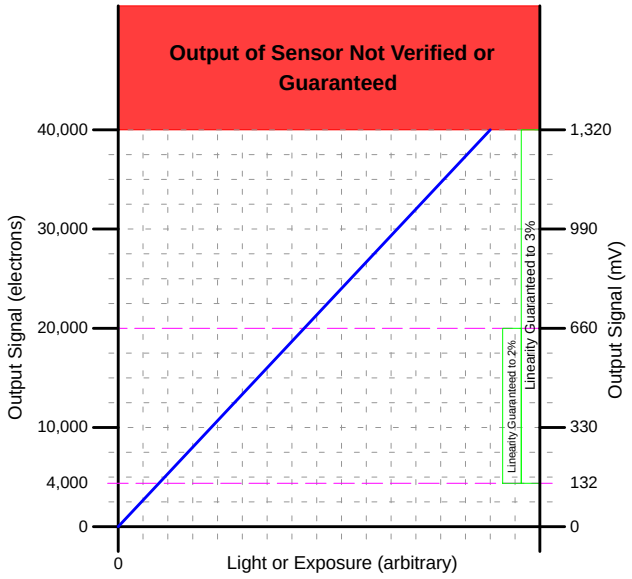

Figure 6. High Gain Linear Signal Range

Low Gain

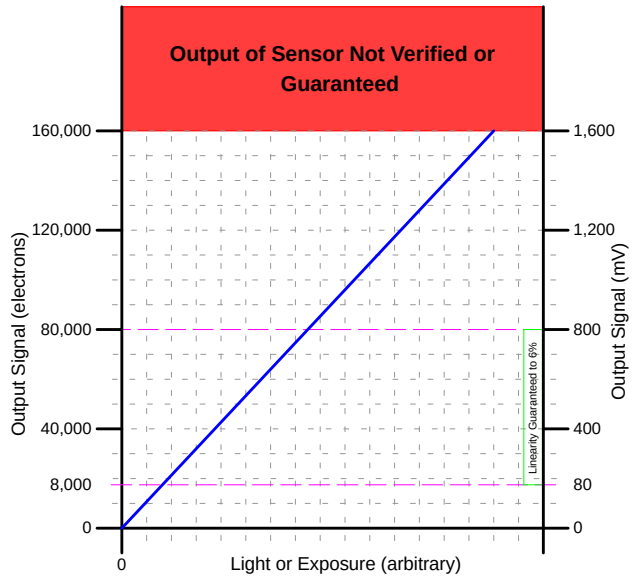

Figure 7. Low Gain Linear Signal Range

Downloaded from Arrow.com.

TYPICAL PERFORMANCE CURVES

Quantum Efficiency

Monochrome without Microlens

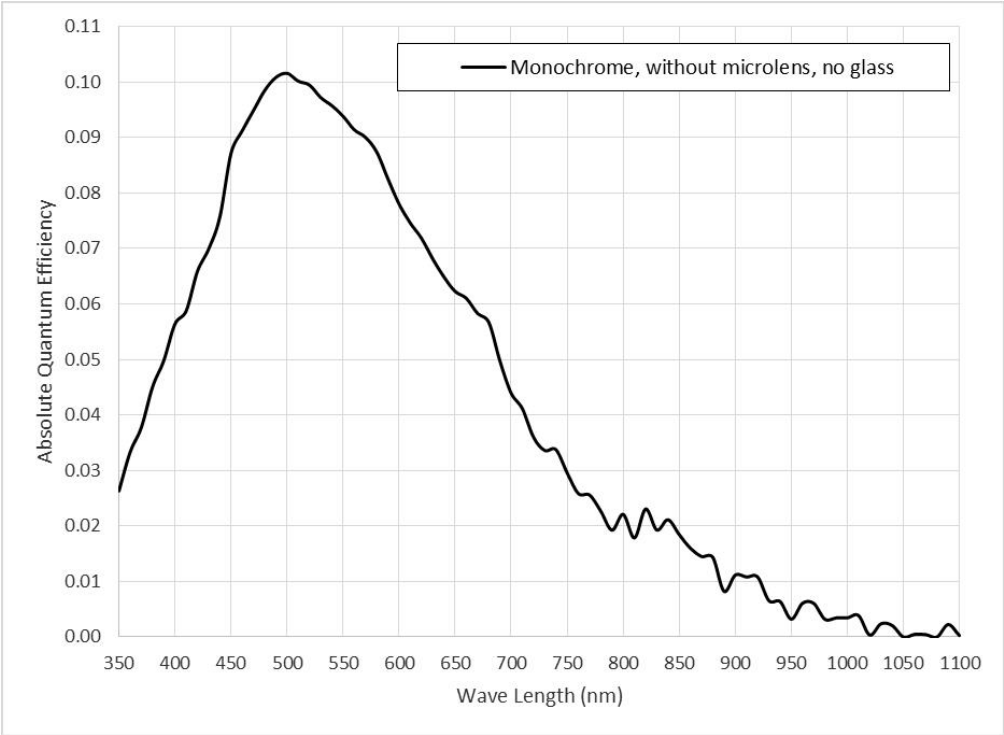

Figure 8. Monochrome without Microlens Quantum Efficiency

Monochrome with Microlens

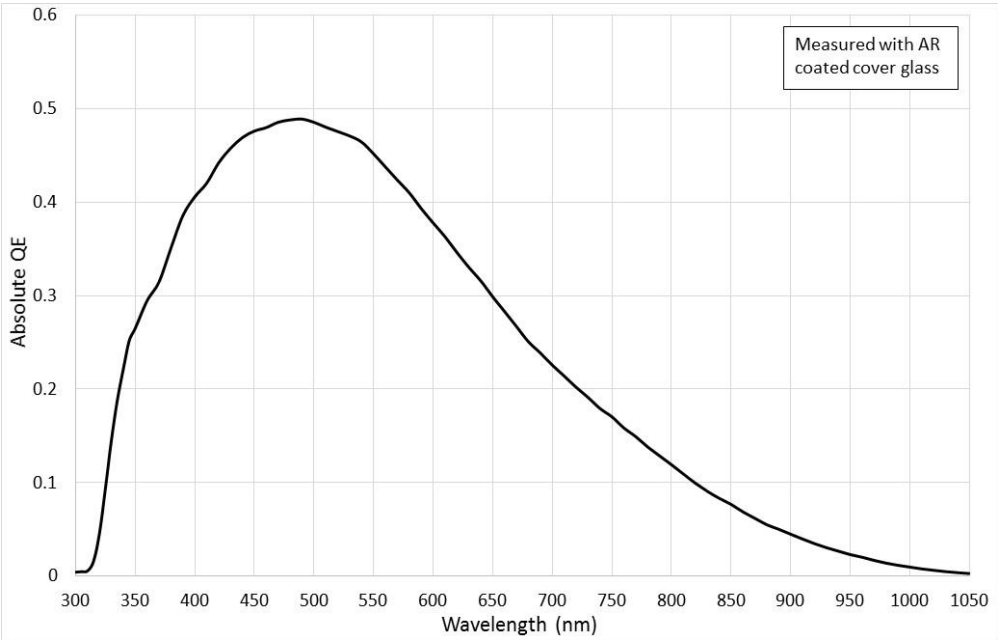

Figure 9. Monochrome with Microlens Quantum Efficiency

Downloaded from Arrow.com.

Color (Bayer RGB) with Microlens (Gen2 and Gen1 CFA)

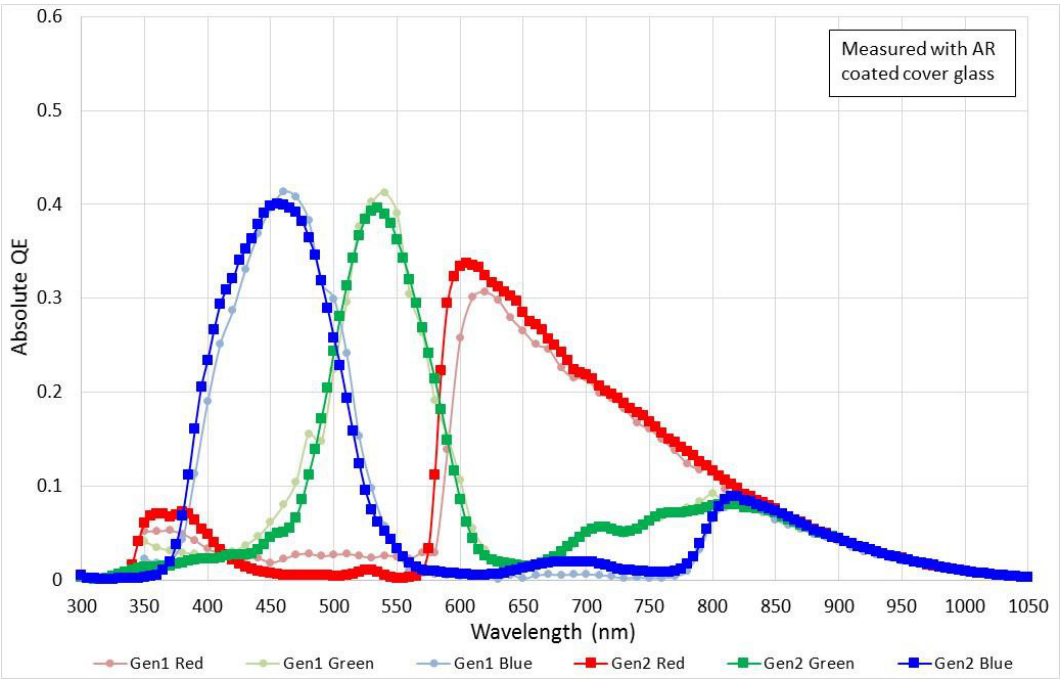

Figure 10. Color (Bayer) with Microlens Quantum Efficiency

Color (TRUESENSE Sparse CFA) with Microlens (Gen2 and Gen1 CFA)

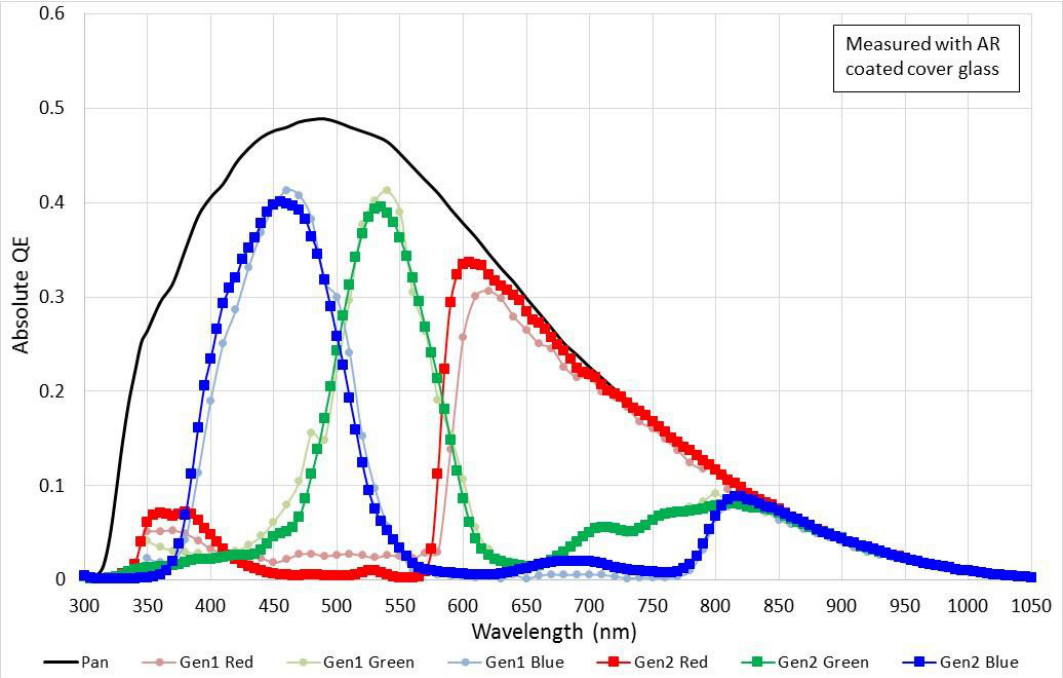

Figure 11. Color (TRUESENSE Sparse CFA) with Microlens Quantum Efficiency

Downloaded from Arrow.com.

Angular Quantum Efficiency

For the curves marked “Horizontal”, the incident light angle is varied in a plane parallel to the HCCD.

For the curves marked “Vertical”, the incident light angle is varied in a plane parallel to the VCCD.

Monochrome with Microlens

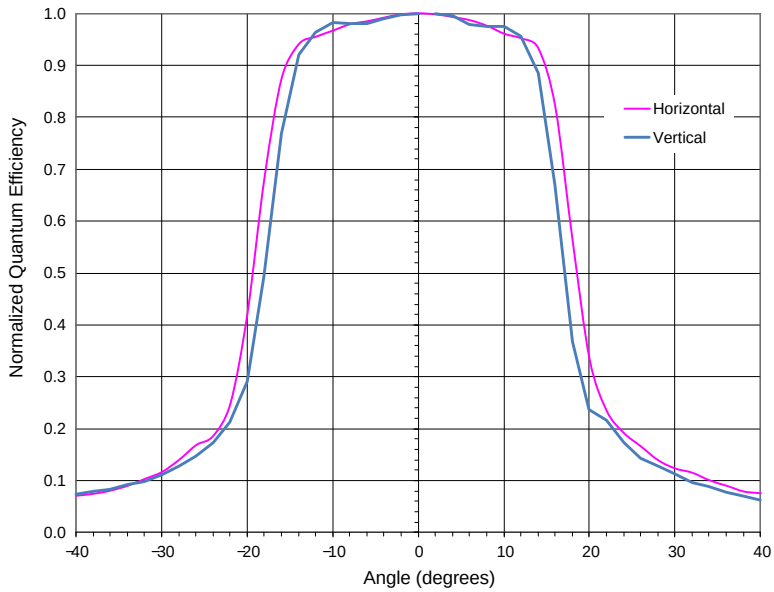

Figure 12. Monochrome with Microlens Angular Quantum Efficiency

Dark Current versus Temperature

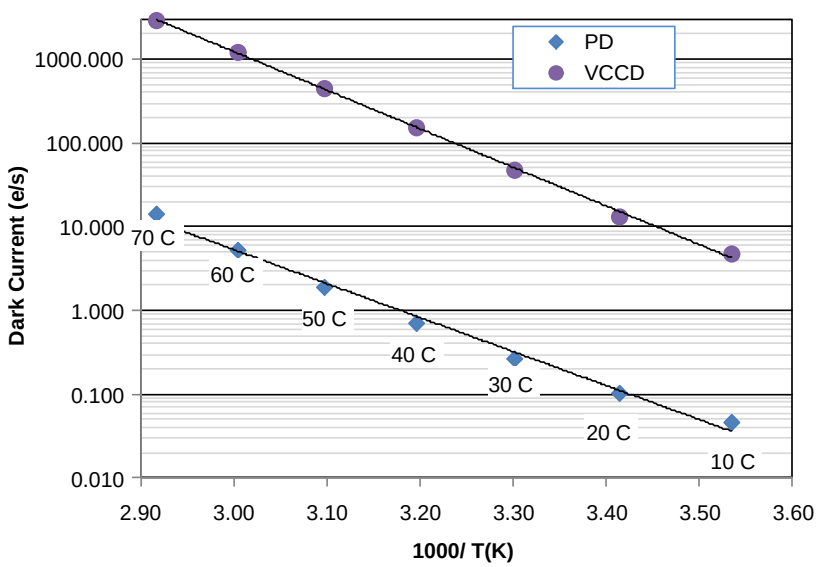

Figure 13. Dark Current versus Temperature

Downloaded from Arrow.com.

Power − Estimated

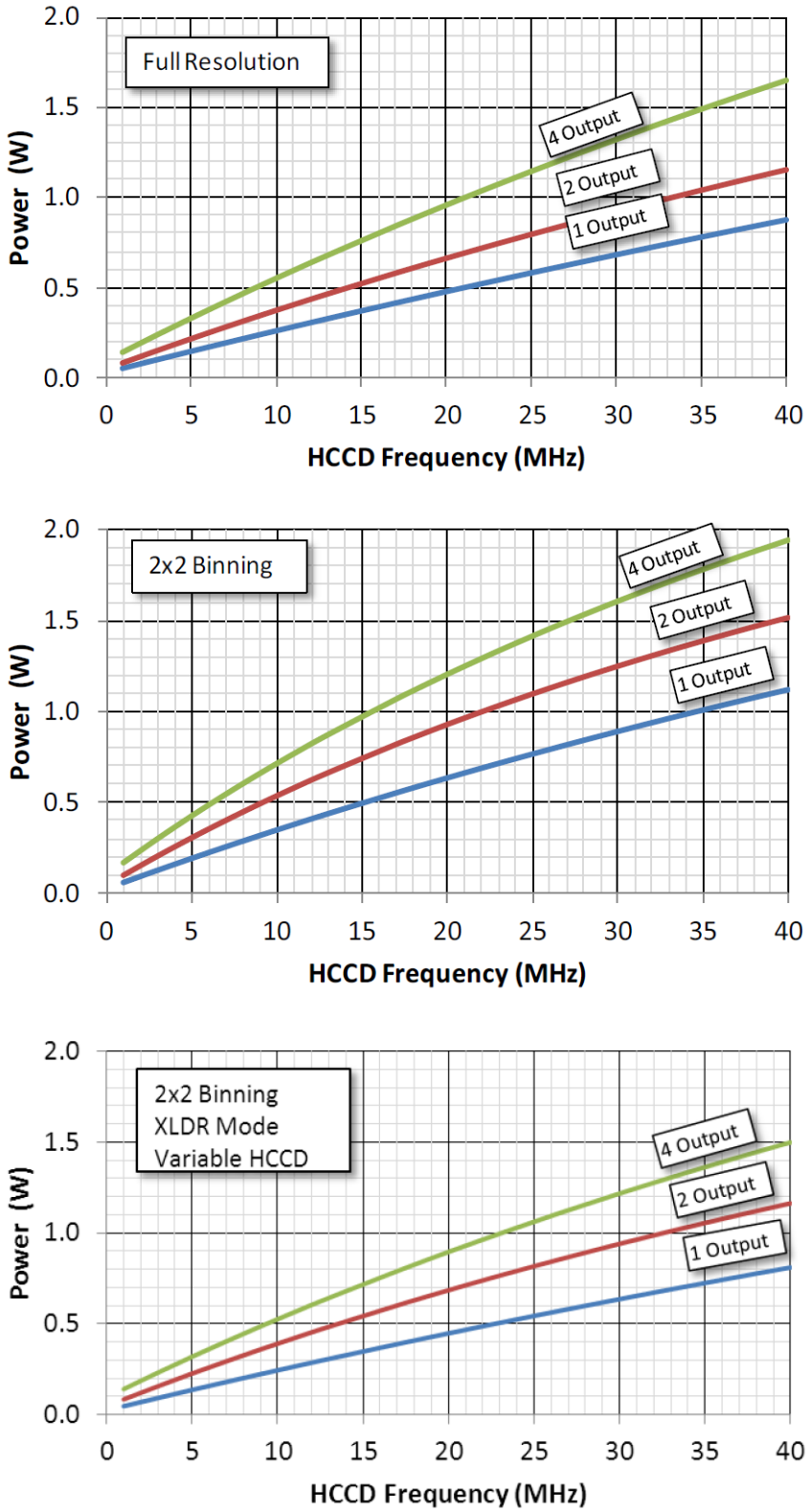

Figure 14. Power

Downloaded from Arrow.com.

Frame Rates

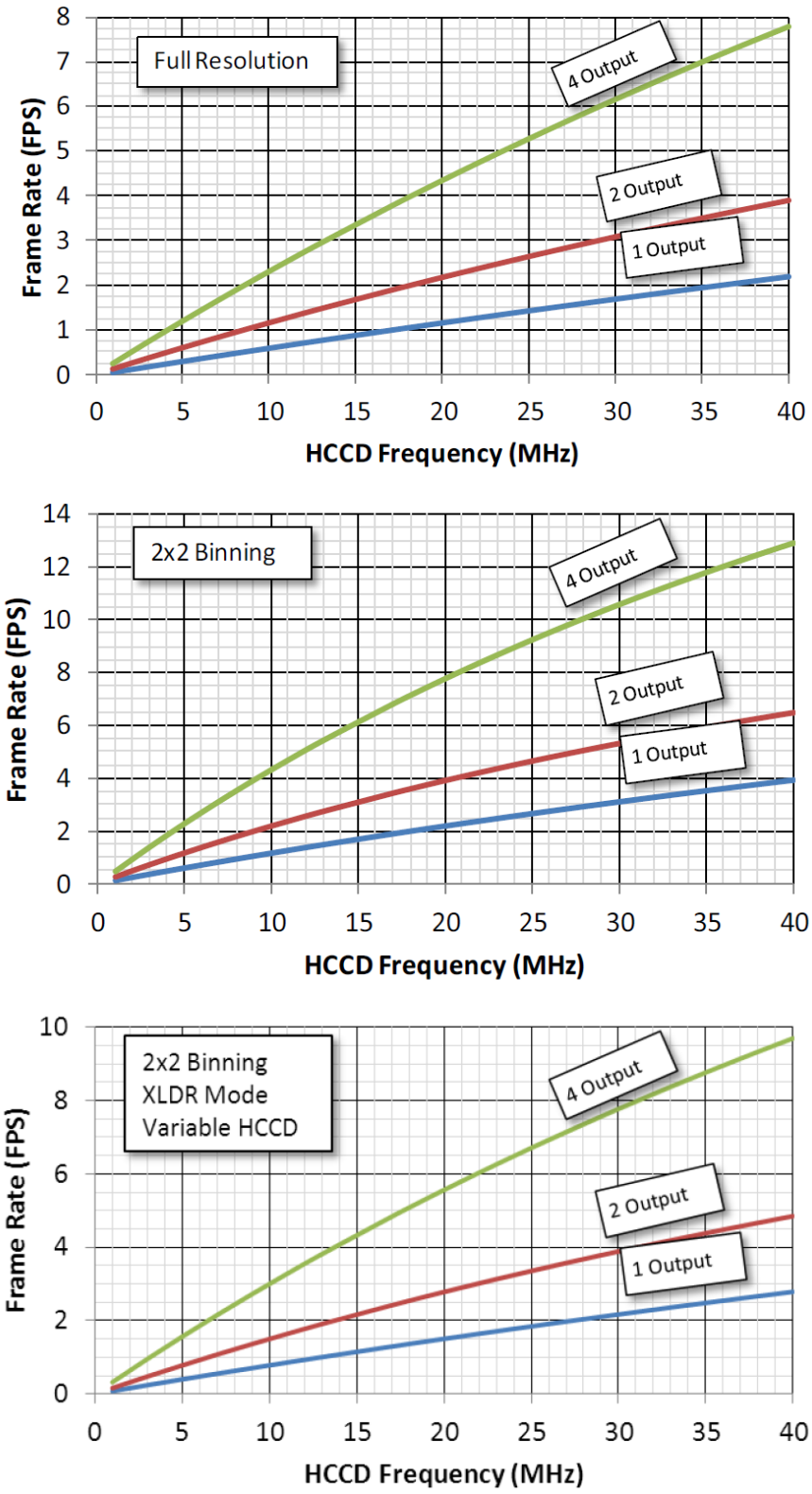

Figure 15. Frame Rates

Downloaded from Arrow.com.

DEFECT DEFINITIONS

Table 10. OPERATION CONDITIONS FOR DEFECT TESTING AT 40°C

Description	Condition	Notes
Operational Mode	One output using VOUTa, continuous readout	
HCCD Clock Frequency	20 MHz	
Pixels Per Line	5000	1
Lines Per Frame	3354	2
Line Time	266 μsec	
Frame Time	894 msec	
Photodiode Integration Time	PD_Tint = Frame Time = 894 msec, no electronic shutter used	
Temperature	40°C	
Light Source	Continuous red, green and blue LED illumination	3
Operation	Nominal operating voltages and timing	

1. Horizontal overclocking used.
2. Vertical overclocking used.
3. For monochrome sensor, only the green LED is used.

Table 11. DEFECT DEFINITIONS FOR TESTING AT 40°C

Description	Definition	Grade 1	Grade 2 Mono	Grade 2 Color	Notes
Major dark field defective bright pixel	PD_Tint = Frame Time; Defect ≥ 325 mV	150	300	300	1
Major bright field defective dark pixel	Defect ≥ 15%				
Minor dark field defective bright pixel	PD_Tint = Frame Time; Defect ≥ 163 mV	1500	3000	3000	
Cluster defect	A group of 2 to 19 contiguous major defective pixels, but no more than 4 adjacent defects horizontally.	30	30	30	2
Column defect	A group of more than 10 contiguous major defective pixels along a single column	0	4	15	2

1. For the color devices (KAI−16070−FXA, KAI−16070−QXA, KAI−16070−CXA, and KAI−16070−PXA), a bright field defective pixel deviates by 12% with respect to pixels of the same color.
2. Column and cluster defects are separated by no less than two (2) good pixels in any direction (excluding single pixel defects).
3. Tested at 40°C with no electronic shutter used.

Downloaded from Arrow.com.

Table 12. OPERATION CONDITIONS FOR DEFECT TESTING AT 27°C

Description	Condition	Notes
Operational Mode	Two outputs, using VOUTa and VOUTc, continuous readout	
HCCD Clock Frequency	20 MHz	
Pixels Per Line	5000	1
Lines Per Frame	3354	2
Line Time	266 μsec	
Frame Time	894 msec	
Photodiode Integration Time (PD_Tint)	PD_Tint = Frame Time = 894 msec, no electronic shutter used	
Temperature	27°C	
Light Source	Continuous red, green and blue LED illumination	3
Operation	Nominal operating voltages and timing	

1. Horizontal overclocking used.
2. Vertical overclocking used.
3. For monochrome sensor, only the green LED is used.

Table 13. DEFECT DEFINITIONS FOR TESTING AT 27°C

Description	Definition	Grade 1	Grade 2 Mono	Grade 2 Color	Notes
Major dark field defective bright pixel	PD_Tint = Frame Time → Defect ≥ 100 mV	150	300	300	1
Major bright field defective dark pixel	Defect ≥ 15%				
Minor dark field defective bright pixel	PD_Tint = Frame Time; Defect ≥ 52 mV	1500	3000	3000	
Cluster defect	A group of 2 to 19 contiguous major defective pixels, but no more than 4 adjacent defects horizontally.	30	30	30	2
Column defect	A group of more than 10 contiguous major defective pixels along a single column	0	4	15	2

1. For the color devices (KAI−16070−FXA, KAI−16070−QXA, KAI−16070−CXA, and KAI−16070−PXA), a bright field defective pixel deviates by 12% with respect to pixels of the same color.
2. Column and cluster defects are separated by no less than two (2) good pixels in any direction (excluding single pixel defects).
3. Tested at 27°C with no electronic shutter used.
4. Defectivity levels for a unit with the Taped Cover Glass configuration (non−sealed cover glass) of this device cannot be guaranteed after final testing at the factory. Image sensors are tested for defects and are mapped prior to shipment. Additional pixel defects and clusters may appear for devices purchased without a sealed cover glass.

Defect Map

The defect map supplied with each sensor is based upon testing at an ambient (27°C) temperature. Minor point defects are not included in the defect map. All defective pixels are reference to pixel 1, 1 in the defect maps. See Figure 16: Regions of interest for the location of pixel 1,1.

Downloaded from Arrow.com.

TEST DEFINITIONS

Test Regions of Interest

Image Area ROI:	Pixel (1, 1) to Pixel (4888, 3256)
Active Area ROI:	Pixel (13, 13) to Pixel (4876, 3244)
Center ROI:	Pixel (2345, 1527) to Pixel (2444, 1628)

Only the Active Area ROI pixels are used for performance and defect tests.

Overclocking

The test system timing is configured such that the sensor is overclocked in both the vertical and horizontal directions. See Figure 16 for a pictorial representation of the regions of interest.

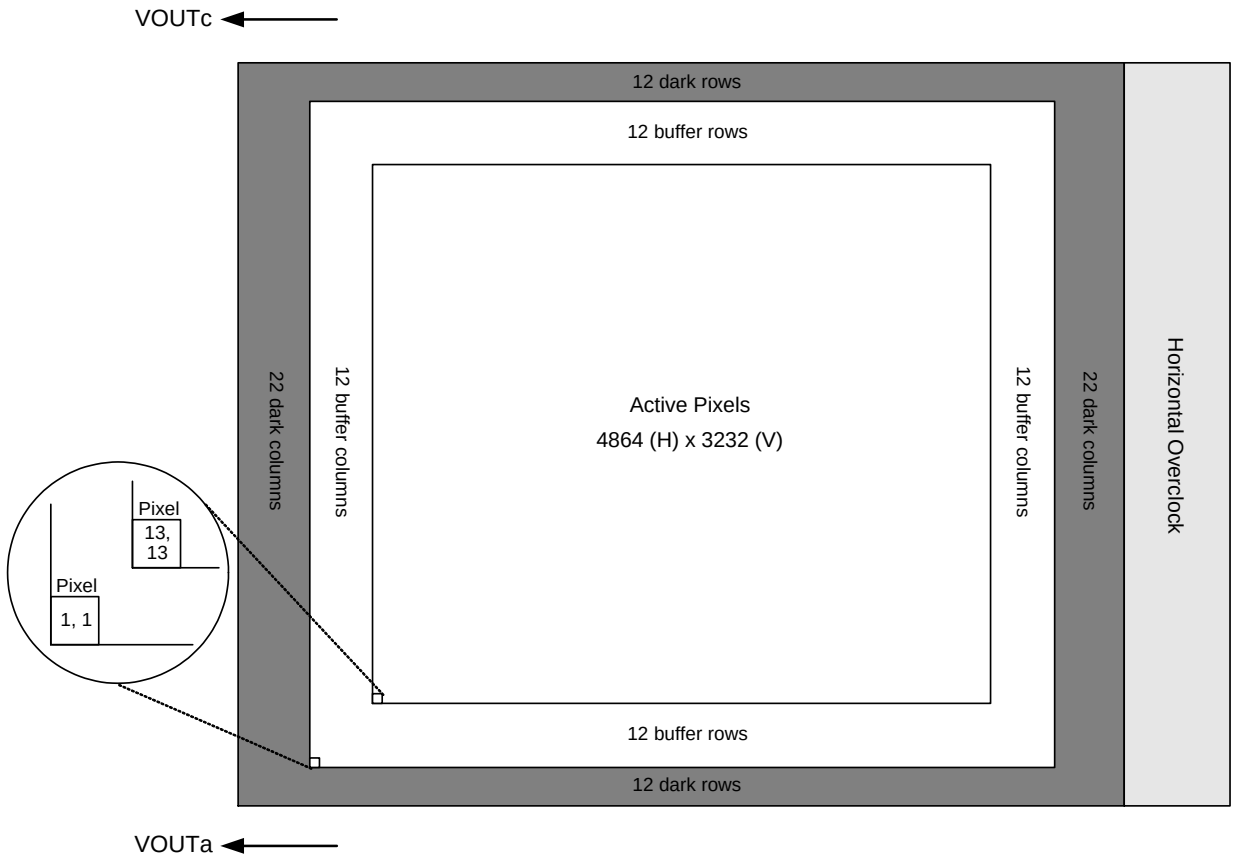

Figure 16. Regions of Interest

Downloaded from Arrow.com.

Tests

Dark Field Global Non−Uniformity

This test is performed under dark field conditions. The sensor is partitioned into 1 mm x 1 mm sub regions, each of which is 135 by 135 pixels in size. The average signal level of each of the sub regions of interest is calculated. The signal level of each of the sub regions of interest is calculated using the following formula:

Signal of ROI[i] = (ROI Average in counts − Horizontal overclock average in counts) * mV per count

Where i = 1 to total # of sub regions. During this calculation on the sub regions of interest, the maximum and minimum signal levels are found. The dark field global uniformity is then calculated as the maximum signal found minus the minimum signal level found.

Units: mVpp (millivolts peak to peak)

Global Non−Uniformity

This test is performed with the imager illuminated to a level such that the output is at 70% of saturation (approximately 924 mV). Prior to this test being performed the substrate voltage has been set such that the charge capacity of the sensor is 1320 mV. Global non−uniformity is defined as

$$\text{GlobalNon−Uniformity} = 100 \times \left(\frac{\text{ActiveAreaStandardDeviation}}{\text{ActiveAreaSignal}}\right)$$

Units: %rms.

Active Area Signal = Active Area Average − Dark Column Average

Global Peak to Peak Non−Uniformity

This test is performed with the imager illuminated to a level such that the output is at 70% of saturation (approximately 924 mV). Prior to this test being performed the substrate voltage has been set such that the charge capacity of the sensor is 1320 mV. The sensor is partitioned into sub regions of interest, each of which is 135 by 135 pixels in size. The average signal level of each of the before mentioned sub regions of interest (ROI) is calculated. The signal level of each of the sub regions of interest is calculated using the following formula:

Signal of ROI[i] = (ROI Average in counts − Horizontal overclock average in counts) * mV per count

Where i = 1 to total # of sub regions. During this calculation on the sub regions of interest, the maximum and minimum signal levels are found. The global peak to peak uniformity is then calculated as:

$$\text{GlobalUniformity} = 100 \times \frac{\text{MaximumSignal} - \text{MinimumSignal}}{\text{ActiveAreaSignal}}$$

Units: %pp

Center Non−Uniformity

This test is performed with the imager illuminated to a level such that the output is at 70% of saturation (approximately 924 mV). Prior to this test being performed the substrate voltage has been set such that the charge capacity of the sensor is 1320 mV. Defects are excluded for the calculation of this test. This test is performed on the center 100 by 100 pixels of the sensor. Center uniformity is defined as:

$$\text{Center ROI Uniformity} = 100 \times \left(\frac{\text{Center ROI Standard Deviation}}{\text{Center ROI Signal}}\right)$$

Units: %rms.

Center ROI Signal = Center ROI Average − Dark Column Average

Dark Field Defect Test

This test is performed under dark field conditions. The sensor is partitioned into 1 mm x 1 mm sub regions, each of which is 135 by 135 pixels in size. In each region of interest, the median value of all pixels is found. For each region of interest, a pixel is marked defective if it is greater than or equal to the median value of that region of interest plus the defect threshold specified in the “Defect Definitions” section.

Bright Field Defect Test

This test is performed with the imager illuminated to a level such that the output is at approximately 924 mV. Prior to this test being performed the substrate voltage has been set such that the charge capacity of the sensor is 1320 mV. The average signal level of all active pixels is found. The bright and dark thresholds are set as:

Dark defect threshold = Active Area Signal * threshold
Bright defect threshold = Active Area Signal * threshold

The sensor is then partitioned into 1 mm x 1 mm sub regions of interest, each of which is 135 by 135 pixels in size. In each region of interest, the average value of all pixels is found. For each region of interest, a pixel is marked defective if it is greater than or equal to the median value of that region of interest plus the bright threshold specified or if it is less than or equal to the median value of that region of interest minus the dark threshold specified.

Downloaded from Arrow.com.

Example for major bright field defective pixels:

- Average value of all active pixels is found to be 924 mV
- Dark defect threshold: 924 mV * 15% = 138 mV
- Bright defect threshold: 924 mV * 15% = 138 mV
- Region of interest #1 selected. This region of interest is pixels 13, 13 to pixels 147, 147.
  - Median of this region of interest is found to be 918 mV.
  - Any pixel in this region of interest that is ≥ (918 + 138 mV) 1062 mV in intensity will be marked defective.
  - Any pixel in this region of interest that is ≤ (918 − 138 mV) 780 mV in intensity will be marked defective.
- All remaining sub regions of interest are analyzed for defective pixels in the same manner. Any remaining factor of pixels less than 135 pixels that are not covered by this moving ROI is placed over the remaining pixels at the active area boundary. A portion of pixels that were tested in the previous ROI will be retested to keep the test ROI at a full 135 by 135 pixels.

Downloaded from Arrow.com.

OPERATION

Table 14. ABSOLUTE MAXIMUM RATINGS

Description	Symbol	Minimum	Maximum	Units	Notes
Operating Temperature	T_{OP}	−50	+70	°C	1
Humidity	RH	+5	+90	%	2
Output Bias Current	I_{out}		60	mA	3
Off−chip Load	C_L		10	pF	

Stresses exceeding those listed in the Maximum Ratings table may damage the device. If any of these limits are exceeded, device functionality should not be assumed, damage may occur and reliability may be affected.

1. Noise performance will degrade at higher temperatures.
2. T = 25°C. Excessive humidity will degrade MTTF.
3. Total for all outputs. Maximum current is −15 mA for each output. Avoid shorting output pins to ground or any low impedance source during operation. Amplifier bandwidth increases at higher current and lower load capacitance at the expense of reduced gain (sensitivity).

Table 15. ABSOLUTE MAXIMUM VOLTAGE RATINGS BETWEEN PINS AND GROUND

Description	Minimum	Maximum	Units	Notes
VDDα, VOUTα	−0.4	17.5	V	1
RDα	−0.4	15.5	V	1
V1B, V1T	ESD − 0.4	ESD + 24.0	V	
V2B, V2T, V3B, V3T, V4B, V4T	ESD − 0.4	ESD + 14.0	V	
FDGab, FDGcd	ESD − 0.4	ESD + 14.0	V	
H1Sα, H1Bα, H2Sα, H2Bα, H2SLα, Rα, OGα	ESD − 0.4	ESD + 14.0	V	1
ESD	−10.0	0.0	V	
SUB	−0.4	+40.0	V	2

1. α denotes a, b, c or d
2. Refer to Application Note *Using Interline CCD Image Sensors in High Intensity Visible Lighting Conditions.*

KAI−29050 Compatibility

The KAI−16070 is pin−for−pin compatible with a camera designed for the KAI−29050 image sensor with the following accommodations:

1. To operate in accordance with a system designed for KAI−29050, the target substrate voltage should be set to be 2.0 V higher than the value recorded on the KAI−16070 shipping container. This setting will cause the charge capacity to be limited to 20 Ke$^-$ (or 660 mV).
2. On the KAI−16070, pins 19 (R2ab) and 55 (R2cd) should be left floating per the KAI−29050 Device Performance Specification.
3. The KAI−16070 will operate in only the high gain mode (33 μV/e).
4. All timing and voltages are taken from the KAI−29050 specification sheet.
5. The number of horizontal and vertical CCD clock cycles is reduced as appropriate.
6. In addition, if the intent is to operate the KAI−16070 image sensor in a camera designed for the KAI−29050 sensor that has been modified to accept and process the full 40,000 e$^-$ (1,320 mV) output, the following changes to the following voltage bias must be made:

Voltage Bias Differences	KAI−29050	KAI−16070
Pins 10, 28, 46, and 64	12.0 V per the specification	Increase this value to 12.6 V

NOTE: To make use of the low gain mode or dual gain mode the KAI−16070 voltages and timing specification must be used.

Downloaded from Arrow.com.

Reset Pin, Low Gain (R2ab and R2cd)

The R2ab and R2bc (pins 19 and 55) each have an internal circuit to bias the pins to 4.3 V. This feature assures the device is set to operate in the high gain mode when pins 19 and 55 are not connected in the application to a clock driver (for KAI−29050 compatibility). Typical capacitor coupled drivers will not drive this structure.

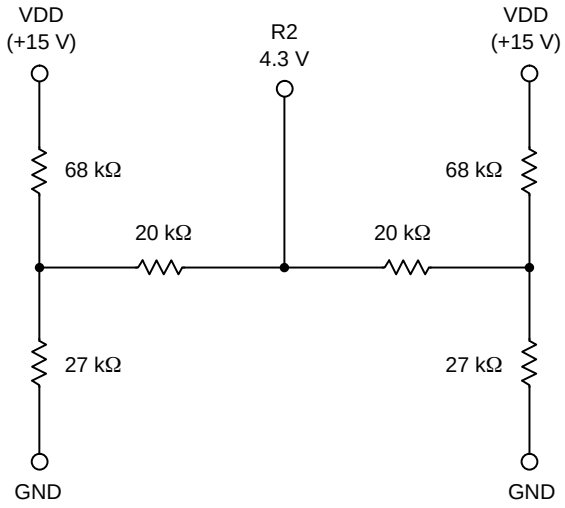

Figure 17. Equivalent Circuit for Reset Gate, Low Gain (R2ab and R2cd)

Downloaded from Arrow.com.

Power−Up and Power−Down Sequence

Adherence to the power−up and power−down sequence is critical. Failure to follow the proper power−up and power−down sequences may cause damage to the sensor.

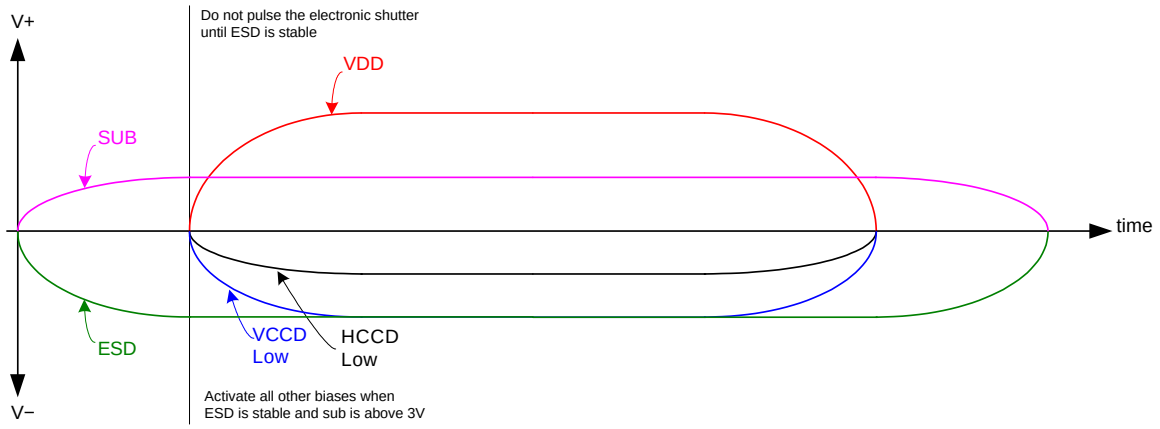

Figure 18. Power−Up and Power−Down Sequence

Notes:

7. Activate all other biases when ESD is stable and SUB is above 3 V
8. Do not pulse the electronic shutter until ESD is stable
9. VDD cannot be +15 V when SUB is 0 V
10. The image sensor can be protected from an accidental improper ESD voltage by current limiting the SUB current to less than 10 mA. SUB and VDD must always be greater than GND. ESD must always be less than GND. Placing diodes between SUB, VDD, ESD and ground will protect the sensor from accidental overshoots of SUB, VDD and ESD during power on and power off. See the figure below.

The VCCD clock waveform must not have a negative overshoot more than 0.4 V below the ESD voltage.

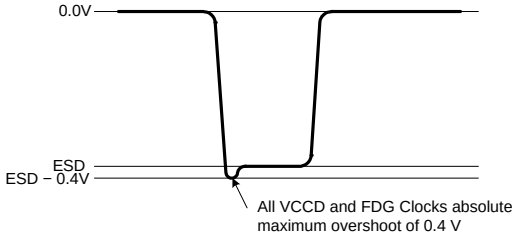

Figure 19.

Example of external diode protection for SUB, VDD and ESD. α denotes a, b, c or d

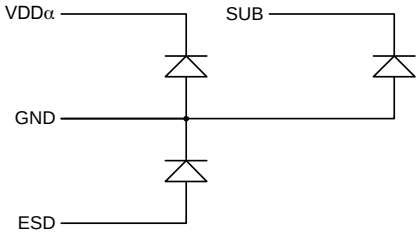

Figure 20.

Downloaded from Arrow.com.

Table 16. DC BIAS OPERATING CONDITIONS

Description	Pins	Symbol	Minimum	Nominal	Maximum	Units	Maximum DC Current	Notes
Reset Drain	RDα	RD	+12.4	+12.6	+12.8	V	10 μA	1, 9
Output Gate	OGα	OG	−2.2	−2.0	−1.8	V	10 μA	1
Output Amplifier Supply	VDDα	VDD	+14.5	+15.0	+15.5	V	11.0 mA	1,2
Ground	GND	GND	0.0	0.0	0.0	V	−1.0 mA	
Substrate	SUB	VSUB	+5.0	VAB	VDD	V	50 μA	3, 8
ESD Protection Disable	ESD	ESD	−9.5	−9.0	Vx_L	V	50 μA	6, 7, 10
Output Bias Current	VOUTα	Iout	−3.0	−5.0	−10.0	mA		1, 4, 5

1. α denotes a, b, c or d
2. The maximum DC current is for one output. Idd = Iout + Iss. See Figure 21.
3. The operating value of the substrate voltage, VAB, will be marked on the shipping container for each device. The value of VAB is set such that the photodiode charge capacity is the nominal PNe (see Specifications).
4. An output load sink must be applied to each VOUT pin to activate each output amplifier.
5. Nominal value required for 40 MHz operation per output. May be reduced for slower data rates and lower noise.
6. Adherence to the power−up and power−down sequence is critical. See Power−Up and Power−Down Sequence section.
7. ESD maximum value must be less than or equal to V1_L + 0.4 V and V2_L + 0.4 V
8. Refer to Application Note *Using Interline CCD Image Sensors in High Intensity Visible Lighting Conditions*
9. 12.0 V may be used if the total output signal desired is 20,000 e^- or less.
10. Where Vx_L is the level set for V1_L, V2_L, V3_L, or V4_L in the application.

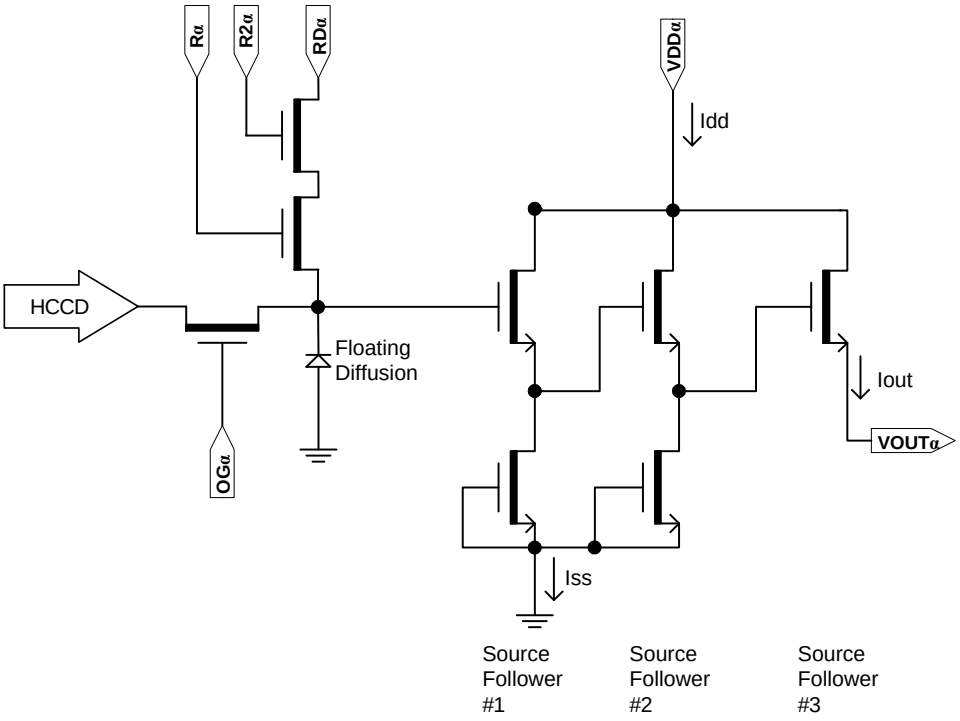

Figure 21. Output Amplifier − Showing Dual Reset Pins

Downloaded from Arrow.com.

AC Operating Conditions

Table 17. CLOCK LEVELS

Description	Pins	Symbol	Level	Minimum	Nominal	Maximum	Units
Vertical CCD Clock, Phase 1	V1B, V1T [1]	V1_L	Low	−8.2	−8.0	−7.8	V
		V1_M	Mid	−0.2	0.0	+0.2	
		V1_H	High	+12.8	+13.0	+14.0	
Vertical CCD Clock, Phase 2	V2B, V2T [1]	V2_L	Low	−8.2	−8.0	−7.8	V
		V2_H	High	−0.2	0.0	+0.2	
Vertical CCD Clock, Phase 3	V3B, V3T [1]	V3_L	Low	−8.2	−8.0	−7.8	V
		V3_H	High	−0.2	0.0	+0.2	
Vertical CCD Clock, Phase 4	V4B, V4T [1]	V4_L	Low	−8.2	−8.0	−7.8	V
		V4_H	High	−0.2	0.0	+0.2	
Horizontal CCD Clock, Phase 1 Storage	H1Sα [1]	H1S_L	Low	−5.0 (5)	−4.4	−4.2	V
		H1S_A	Amplitude	+4.2	+4.4	+5.0 (5)	
Horizontal CCD Clock, Phase 1 Barrier	H1Bα [1]	H1B_L	Low	−5.0 (5)	−4.4	−4.2	V
		H1B_A	Amplitude	+4.2	+4.4	+5.0 (5)	
Horizontal CCD Clock, Phase 2 Storage	H2Sα [1]	H2S_L	Low	−5.0 (5)	−4.4	−4.2	V
		H2S_A	Amplitude	+4.2	+4.4	+5.0 (5)	
Horizontal CCD Clock, Phase 2 Barrier	H2Bα [1]	H2B_L	Low	−5.0 (5)	−4.4	−4.2	V
		H2B_A	Amplitude	+4.2	+4.4	+5.0 (5)	
Horizontal CCD Clock, Last Phase [2]	H2SLα [1]	H2SL_L	Low	−5.2	−5.0	−4.8	V
		H2SL_A	Amplitude	+4.8	+5.0	+5.2	
Reset Gate	Rα [1]	R_L [3]	Low	−3.2	−3.0	−2.8	V
		R_A	Amplitude	+6.0		+6.4	
Reset Gate	R2ab, R2cd	R_L [3]	Low	−2.0	−1.8	−1.6	V
		R_A	Amplitude	+6.0		+6.4	
Electronic Shutter [4]	SUB	VES	High	+29.0	+30.0	+40.0	V
Fast Line Dump Gate	FDGα [1]	FDG_L	Low	−8.2	−8.0	−7.8	V
		FDG_H	High	+4.5	+5.0	+5.5	

1. α denotes a, b, c or d
2. Use separate clock driver for improved speed performance.
3. Reset low should be set to –3 volts for signal levels greater than 40,000 electrons.
4. Refer to Application Note *Using Interline CCD Image Sensors in High Intensity Visible Lighting Conditions*
5. If the minimum horizontal clock low level is used (–5.0 V), then the maximum horizontal clock amplitude should be used (5 V amplitude) to create a –5.0 V to 0.0 V clock.

The figure below shows the DC bias (VSUB) and AC clock (VES) applied to the SUB pin. Both the DC bias and AC clock are referenced to ground.

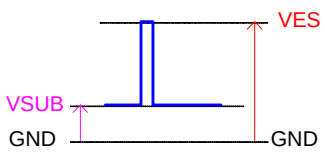

Figure 22.

Downloaded from Arrow.com.

Capacitance

Table 18. CAPACITANCE

	V1B	V2B	V3B	V4B	V1T	V2T	V3T	V4T	GND	All Pins	Units
V1B	X	17	11	14	6	5	6	4	24	88	nF
V2B	X	X	21	10	5	3	4	3	7	74	nF
V3B	X	X	X	19	6	5	6	4	8	83	nF
V4B	X	X	X	X	5	4	5	3	23	76	nF
V1T	X	X	X	X	X	14	11	17	24	86	nF
V2T	X	X	X	X	X	X	16	6	22	75	nF
V3T	X	X	X	X	X	X	X	19	11	84	nF
V4T	X	X	X	X	X	X	X	X	5	73	nF
FDGT	0.6	0.5	0.5	0.4	16	3.1	1.0	1.1	94	117	pF
FDGB	0.6	0.5	0.5	0.4	16	3.1	1.0	1.1	94	117	pF
VSUB	2	2	2	2	2	2	2	2	11	11	nF

	H2S	H1B	H2B	GND	All Pins	Units
H1S	45	75	44	196	360	pF
H2S	X	47	41	281	368	pF
H1B	X	X	12	313	324	pF
H2B	X	X	X	293	293	pF

1. Tables show typical cross capacitance between pins of the device.
2. Capacitance is total for all like named pins.

Downloaded from Arrow.com.

Device Identification

The device identification pin (DevID) may be used to identify different members of the ON Semiconductor 5.5 micron and 7.4 micron Interline Transfer CCD Platforms.

Table 19. DEVICE IDENTIFICATION

Description	Pins	Symbol	Minimum	Nominal	Maximum	Units	Maximum DC Current	Notes
Device Identification	DevID	DevID	32,000	40,000	48,000	Ω	50 μA	1, 2, 3

1. Nominal value subject to verification and/or change during release of preliminary specifications.
2. If the Device Identification is not used, it may be left disconnected.
3. After Device Identification resistance has been read during camera initialization, it is recommended that the circuit be disabled to prevent localized heating of the sensor due to current flow through the R_DeviceID resistor.

Recommended Circuit

Note that V1 must be a different value than V2.

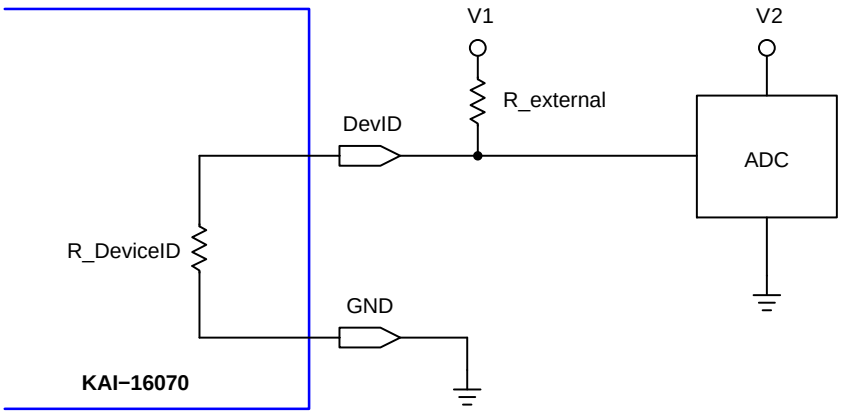

Figure 23. Device Identification Recommended Circuit

Downloaded from Arrow.com.

TIMING

Table 20. REQUIREMENTS AND CHARACTERISTICS

Description	Symbol	Minimum	Nominal	Maximum	Units	Notes
Photodiode Transfer	t_{pd}	6	–	–	µs	
VCCD Leading Pedestal	t_{3p}	16	–	–	µs	
VCCD Trailing Pedestal	t_{3d}	16	–	–	µs	
VCCD Transfer Delay	t_d	2	–	–	µs	
VCCD Transfer	t_v	4	–	–	µs	
VCCD Rise, Fall Times	t_{VR}, t_{VF}	5	–	10	%	1, 2
FDG Delay	t_{fdg}	2	–	–	µs	
HCCD Delay	t_{hs}	2	–	–	µs	
HCCD Transfer	t_e	25.0	–	–	ns	
Shutter Transfer	t_{sub}	2	–	–	µs	
Shutter Delay	t_{hd}	2	–	–	µs	
Reset Pulse	t_r	2.5	–	–	ns	
Reset – Video Delay	t_{rv}	–	2.2	–	ns	
H2SL – Video Delay	t_{hv}	–	2.2	–	ns	
Line Time	t_{line}	77.9	–	–	µs	Dual HCCD Readout
		140	–	–		Single HCCD Readout
Frame Time	t_{frame}	129	–	–	ms	Quad HCCD Readout
		257	–	–		Dual HCCD Readout
		461	–	–		Single HCCD Readout
Line Time (XLDR Bin 2x2)	t_{line}	124.9	–	–	µs	Dual HCCD Readout
		217.4	–	–		Single HCCD Readout
Frame Time (XLDR Bin 2x2) Constant HCCD Timing	t_{frame}	133	–	–	ms	Quad HCCD Readout
		267	–	–		Dual HCCD Readout
		466	–	–		Single HCCD Readout
Frame Time (XLDR Bin 2x2) Variable HCCD Timing	t_{frame}	103	–	–	ms	Quad HCCD Readout
		206	–	–		Dual HCCD Readout
		359	–	–		Single HCCD Readout

1. Refer to Figure 41: VCCD Clock Rise Time and Fall Time.
2. Relative to the pulse width, t_V.

Downloaded from Arrow.com.

Timing Flow Charts

In the timing flow charts the number of HCCD clock cycles per row, NH, and the number of VCCD clock cycles per frame, NV, are shown in the following table.

Table 21. VALUES FOR NH AND NV WHEN OPERATING THE SENSOR IN THE VARIOUS MODES OF RESOLUTION

	Full Resolution		1/4 Resolution		XLDR	
	NV	NH	NV	NH	NV	NH
Quad	1650	2477	825	1238	825	1238
Dual VOUTa, VOUTc	1650	4943	825	2471	825	2471
Dual VOUTa, VOUTb	3278	2477	1639	1238	1639	1238
Single VOUTa	3278	4943	1639	2471	1639	2471

1. The time to read out one line t_{LINE} = Line Timing + NH / (Pixel Frequency).
2. The time to read out one frame $t_{FRAME} = NV \cdot t_{LINE}$ + Frame Timing.
3. Line Timing: See Table 23: Line Timing.
4. Frame Timing: See Table 22: Frame Timing.
5. XLDR: eXtended Linear Dynamic Range.

No Electronic Shutter

In this case the photodiode exposure time is equal to the time to read out an image. This flow chart applies to both full and 1/4 resolution modes.

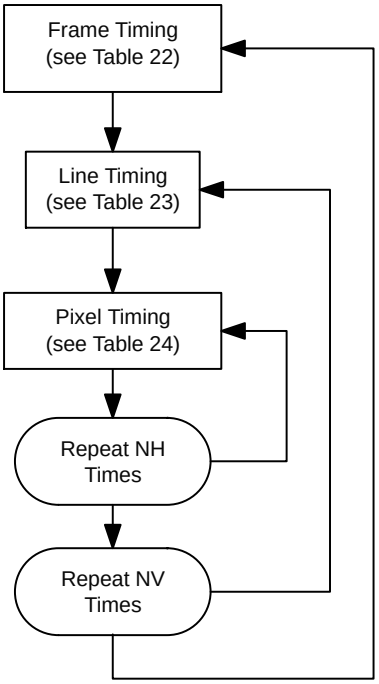

Figure 24. Timing Flow when Electronic Shutter is Not Used

Downloaded from Arrow.com.

Using the Electronic Shutter

This flow chart applies to both the full and 1/4 resolution modes. The exposure time begins on the falling edge of the electronic shutter pulse on the SUB pin. The exposure time ends on the falling edge of the +13 V to 0 V transition of the V1T and V1B pins. NEXP is varied to change the exposure time in increments of the line time. The electronic shutter timing is obtained from Figure 33.

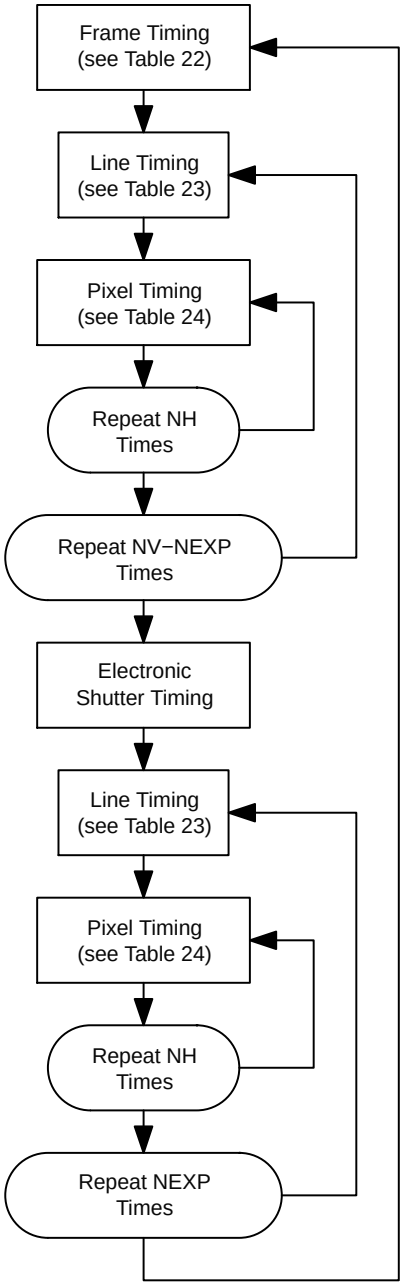

NOTE: NEXP: Exposure time in increments of number of lines.

Figure 25. Timing Flow Chart using the Electronic Shutter for Exposure Control

Downloaded from Arrow.com.

Window Readout Using the Fast Dump

This timing quickly dumps NV1 lines, then reads out NV2 lines, and then quickly dumps another NV3 lines. NV1 + NV2 + NV3 must be greater than or equal to NV. Note when operating in quad or dual VOUTa + VOUTc modes the NV2 valid image lines must be in the center of the pixel array or contained entirely within the bottom half or top half of the pixel array. This is due to the top and bottom middle split of the VCCD. In the single output or dual VOUTa + VOUTb modes the NV2 valid image lines may be located anywhere within the pixel array.

The line timing with the FDGab and FDGcd pins disabled means those pins are held at a constant −9 V. When they are enabled, they are held at +5 V during a line transfer.

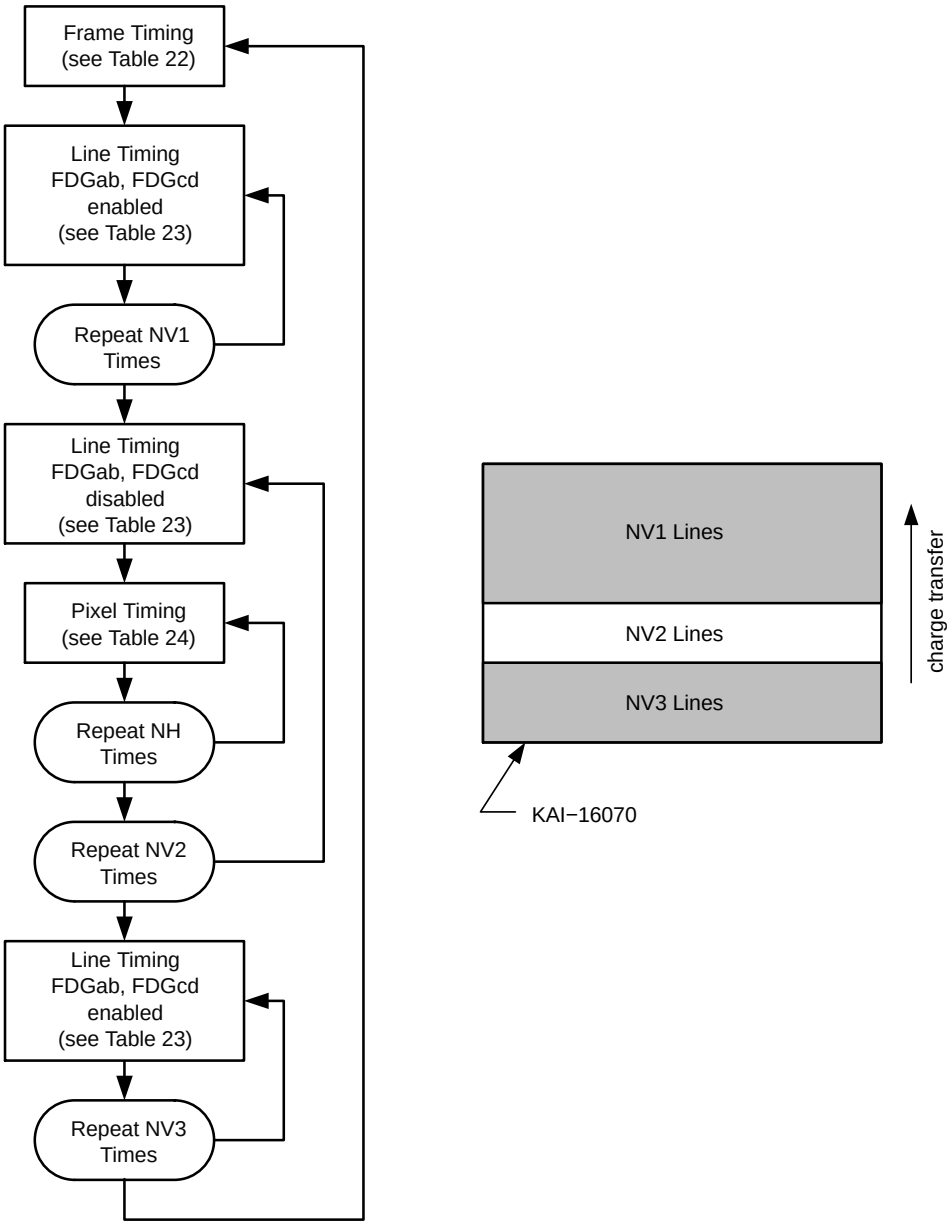

Figure 26. Sub Window Timing Flow Chart

Downloaded from Arrow.com.

Line Sampling Readout Using the Fast Dump

This timing repeats the process of dumping NV4 lines and reading NV5 lines. The total NV6 x (NV4 + NV5) must be greater than or equal to NV. This timing can be used for alternately skipping and reading lines. For example, if NV4 = 2 and NV5 = 1 then every third line will be read out (skip 2 read 1).

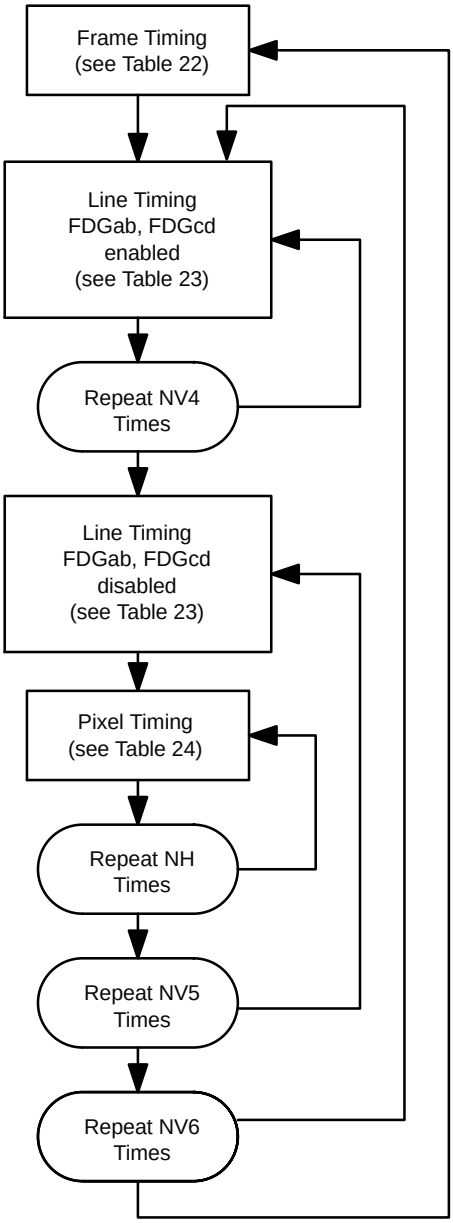

Figure 27. Timing Flow Chart to Alternately Skip and Read Rows for Subsampling

Downloaded from Arrow.com.

Timing Tables

Frame Timing

This timing table is for transferring charge from the photodiodes to the VCCD.

Table 22. FRAME TIMING

Device Pin	Full Resolution, High Gain or Low Gain				1/4 Resolution, High Gain or Low Gain				1/4 Resolution XLDR			
	Quad	Dual VOUTa VOUTc	Dual VOUTa VOUTb	Single VOUTa	Quad	Dual VOUTa VOUTc	Dual VOUTa VOUTb	Single VOUTa	Quad	Dual VOUTa VOUTc	Dual VOUTa VOUTb	Single VOUTa
V1T	F1T		F1B		F1T		F1B		F1T		F1B	
V2T	F2T		F4B		F2T		F4B		F2T		F4B	
V3T	F3T		F3B		F3T		F3B		F3T		F3B	
V4T	F4T		F2B		F4T		F2B		F4T		F2B	
V1B	F1B				F1B				F1B			
V2B	F2B				F2B				F2B			
V3B	F3B				F3B				F3B			
V4B	F4B				F4B				F4B			
H1Sa	P1				P1Q				P1XL			
H1Ba	P1				P1Q				P1XL			
H2Sa	P2				P2Q				P2XL			
H2Ba	P2				P2Q				P2XL			
Ra	RHG/RLG				RHGQ/RLGQ				RXL			
H1Sb	P1				P1Q				P1XL			
H1Bb	P1	P2	P1	P2	P1Q	P2Q	P1Q	P2Q	P1XL	P2XL	P1XL	P2XL
H2Sb	P2				P2Q				P2XL			
H2Bb	P2	P1	P2	P1	P2Q	P1Q	P2Q	P1Q	P2XL	P1XL	P2XL	P1XL
Rb	RHG/ RLG	(Note 1)	RHG/ RLG	(Note 1)	RHGQ/ RLGQ	(Note 1)	RHGQ/ RLGQ	(Note 1)	RXL	(Note 1)	RXL	(Note 1)
R2ab	R2HG/R2LG				R2HGQ/R2LGQ				R2XL			
FDGab	−9 V				−9 V				−9 V			
H1Sc	P1		(Note 1)		P1Q		(Note 1)		P1XL		(Note 1)	
H1Bc	P1		(Note 1)		P1Q		(Note 1)		P1XL		(Note 1)	
H2Sc	P2		(Note 1)		P2Q		(Note 1)		P2XL		(Note 1)	
H2Bc	P2		(Note 1)		P2Q		(Note 1)		P2XL		(Note 1)	
Rc	RHG/RLG		(Note 1)		RHGQ/RLGQ		(Note 1)		RXL		(Note 1)	
H1Sd	P1		(Note 1)		P1Q		(Note 1)		P1XL		(Note 1)	
H1Bd	P1	P2	(Note 1)		P1Q	P2Q	(Note 1)		P1XL	P2XL	(Note 1)	
H2Sd	P2		(Note 1)		P2Q		(Note 1)		P2XL		(Note 1)	
H2Bd	P2	P1	(Note 1)		P2Q	P1Q	(Note 1)		P2XL	P1XL	(Note 1)	
Rd	RHG/ RLG	(Note 1)	(Note 1)		RHGQ/ RLGQ	(Note 1)	(Note 1)		RXL	(Note 1)	(Note 1)	
R2cd	R2HG/R2LG		(Note 1)		R2HGQ/R2LGQ		(Note 1)		R2XL		(Note 1)	
FDGcd	−9 V				−9 V				−9 V			
SHP	SHP1				SHPQ				(Note 4)			
SHD	SHD1				SHDQ				(Note 5)			

1. This clock should be held at its high level voltage (0 V) or held at +5.0 V for compatibility with TRUESENSE 5.5 micron Interline Transfer CCD family of products.
2. SHP and SHD are the sample clocks for the analog front end (AFE) signal processor.
3. This note left intentionally empty.
4. Use SHPLG for the AFE processing the low gain signal. Use SHPHG for the AFE processing the high gain signal.
5. Use SHDLG for the AFE processing the low gain signal. Use SHDHG for the AFE processing the high gain signal.

Downloaded from Arrow.com.

Line Timing

This timing is for transferring one line of charge from the VCCD to the HCCD.

Table 23. LINE TIMING

Device Pin	Full Resolution, High Gain or Low Gain				1/4 Resolution, High Gain or Low Gain				1/4 Resolution XLDR			
	Quad	Dual VOUTa VOUTc	Dual VOUTa VOUTb	Single VOUTa	Quad	Dual VOUTa VOUTc	Dual VOUTa VOUTb	Single VOUTa	Quad	Dual VOUTa VOUTc	Dual VOUTa VOUTb	Single VOUTa
V1T	L1T		L1B		2 × L1T		2 × L1B		2 × L1T		2 × L1B	
V2T	L2T		L4B		2 × L2T		2 × L4B		2 × L2T		2 × L4B	
V3T	L3T		L3B		2 × L3T		2 × L3B		2 × L3T		2 × L3B	
V4T	L4T		L2B		2 × L4T		2 × L2B		2 × L4T		2 × L2B	
V1B	L1B				2 × L1B				2 × L1B			
V2B	L2B				2 × L2B				2 × L2B			
V3B	L3B				2 × L3B				2 × L3B			
V4B	L4B				2 × L4B				2 × L4B			
H1Sa	P1L				P1LQ				P3XL			
H1Ba	P1L				P1LQ				P3XL			
H2Sa	P2L				P2LQ				P4XL			
H2Ba	P2L				P2LQ				P4XL			
Ra	RHG/RLG				RHGQ/RLGQ				RXL			
H1Sb	P1L				P1LQ				P3XL			
H1Bb	P1L	P2L	P1L	P2L	P1LQ	P2LQ	P1LQ	P2LQ	P3XL	P4XL	P3XL	P4XL
H2Sb	P2L				P2LQ				P4XL			
H2Bb	P2L	P1L	P2L	P1L	P2LQ	P1LQ	P2LQ	P1LQ	P4XL	P3XL	P4XL	P3XL
Rb	RHG/ RLG	(Note 1)	RHG/ RLG	(Note 1)	RHGQ/ RLGQ	(Note 1)	RHGQ/ RLGQ	(Note 1)	RXL	(Note 1)	RXL	(Note 1)
R2ab	R2HG/R2LG				R2HGQ/R2LGQ				R2XL			
FDGab	−9 V				−9 V				−9 V			
H1Sc	P1L		(Note 1)		P1LQ		(Note 1)		P3XL		(Note 1)	
H1Bc	P1L		(Note 1)		P1LQ		(Note 1)		P3XL		(Note 1)	
H2Sc	P2L		(Note 1)		P2LQ		(Note 1)		P4XL		(Note 1)	
H2Bc	P2L		(Note 1)		P2LQ		(Note 1)		P4XL		(Note 1)	
Rc	RHG/RLG		(Note 1)		RHGQ/RLGQ		(Note 1)		RXL		(Note 1)	
H1Sd	P1L		(Note 1)		P1LQ		(Note 1)		P3XL		(Note 1)	
H1Bd	P1L	P2L	(Note 1)		P1LQ	P2LQ	(Note 1)		P3XL	P4XL	(Note 1)	
H2Sd	P2L		(Note 1)		P2LQ		(Note 1)		P4XL		(Note 1)	
H2Bd	P2L	P1L	(Note 1)		P2LQ	P1LQ	(Note 1)		P4XL	P3XL	(Note 1)	
Rd	RHG/ RLG	(Note 1)	(Note 1)		RHGQ/ RLGQ	(Note 1)	(Note 1)		RXL	(Note 1)	(Note 1)	
R2cd	R2HG/R2LG		(Note 1)		R2HGQ/R2LGQ		(Note 1)		R2XL		(Note 1)	
FDGcd	−9 V				−9 V				−9 V			
SHP	SHP1				SHPQ				(Note 4)			
SHD	SHD1				SHDQ				(Note 5)			

1. This clock should be held at its high level voltage (0 V) or held at +5.0 V for compatibility with TRUESENSE 5.5 micron Interline Transfer CCD family of products.
2. SHP and SHD are the sample clocks for the analog front end (AFE) signal processor.
3. The notation 2× L1B means repeat the L1B timing twice for every line. This sums two rows into the HCCD.
4. Use SHPLG for the AFE processing the low gain signal. Use SHPHG for the AFE processing the high gain signal.
5. Use SHDLG for the AFE processing the low gain signal. Use SHDHG for the AFE processing the high gain signal.

Downloaded from Arrow.com.

Pixel Timing

This timing is for transferring one pixel from the HCCD to the output amplifier.

Table 24. PIXEL TIMING

Device Pin	Full Resolution, High Gain or Low Gain				1/4 Resolution, High Gain or Low Gain				1/4 Resolution XLDR			
	Quad	Dual VOUTa VOUTc	Dual VOUTa VOUTb	Single VOUTa	Quad	Dual VOUTa VOUTc	Dual VOUTa VOUTb	Single VOUTa	Quad	Dual VOUTa VOUTc	Dual VOUTa VOUTb	Single VOUTa
V1T	−9 V				−9 V				−9 V			
V2T	−9 V				−9 V				−9 V			
V3T	0 V				0 V				0 V			
V4T	0 V				0 V				0 V			
V1B	−9 V				−9 V				−9 V			
V2B	0 V				0 V				0 V			
V3B	0 V				0 V				0 V			
V4B	−9 V				−9 V				−9 V			
H1Sa	P1				P1Q				P1XL			
H1Ba	P1				P1Q				P1XL			
H2Sa	P2				P2Q				P2XL			
H2Ba	P2				P2Q				P2XL			
Ra	RHG/RLG				RHGQ/RLGQ				RXL			
H1Sb	P1				P1Q				P1XL			
H1Bb	P1	P2	P1	P2	P1Q	P2Q	P1Q	P2Q	P1XL	P2XL	P1XL	P2XL
H2Sb	P2				P2Q				P2XL			
H2Bb	P2	P1	P2	P1	P2Q	P1Q	P2Q	P1Q	P2XL	P1XL	P2XL	P1XL
Rb	RHG/ RLG	(Note 1)	RHG/ RLG	(Note 1)	RHGQ/ RLGQ	(Note 1)	RHGQ/ RLGQ	(Note 1)	RXL	(Note 1)	RXL	(Note 1)
R2ab	R2HG/R2LG				R2HGQ/R2LGQ				R2XL			
R2ab	−9 V				−9 V				−9 V			
H1Sc	P1		(Note 1)		P1Q		(Note 1)		P1XL		(Note 1)	
H1Bc	P1		(Note 1)		P1Q		(Note 1)		P1XL		(Note 1)	
H2Sc	P2		(Note 1)		P2Q		(Note 1)		P2XL		(Note 1)	
H2Bc	P2		(Note 1)		P2Q		(Note 1)		P2XL		(Note 1)	
Rc	RHG/RLG		(Note 1)		RHGQ/RLGQ		(Note 1)		RXL		(Note 1)	
H1Sd	P1		(Note 1)		P1Q		(Note 1)		P1XL		(Note 1)	
H1Bd	P1	P2	(Note 1)		P1Q	P2Q	(Note 1)		P1XL	P2XL	(Note 1)	
H2Sd	P2		(Note 1)		P2Q		(Note 1)		P2XL		(Note 1)	
H2Bd	P2	P1	(Note 1)		P2Q	P1Q	(Note 1)		P2XL	P1XL	(Note 1)	
Rd	RHG/ RLG	(Note 1)	(Note 1)		RHGQ/ RLGQ	(Note 1)	(Note 1)		RXL	(Note 1)	(Note 1)	
R2cd	R2HG/R2LG		(Note 1)		R2HGQ/R2LGQ		(Note 1)		R2XL		(Note 1)	
R2ab	−9 V				−9 V				−9 V			
SHP (Note 2)	SHP1				SHPQ				(Note 4)			
SHD (Note 2)	SHD1				SHDQ				(Note 5)			

1. This clock should be held at its high level voltage (0 V) or held at +5.0 V for compatibility with TRUESENSE 5.5 micron Interline Transfer CCD family of products.
2. SHP and SHD are the sample clocks for the analog front end (AFE) signal processor.
3. This note intentionally left empty.
4. Use SHPLG for the AFE processing the low gain signal. Use SHPHG for the AFE processing the high gain signal.
5. Use SHDLG for the AFE processing the low gain signal. Use SHDHG for the AFE processing the high gain signal.

Downloaded from Arrow.com.

Timing Diagrams

Frame TimingDiagrams

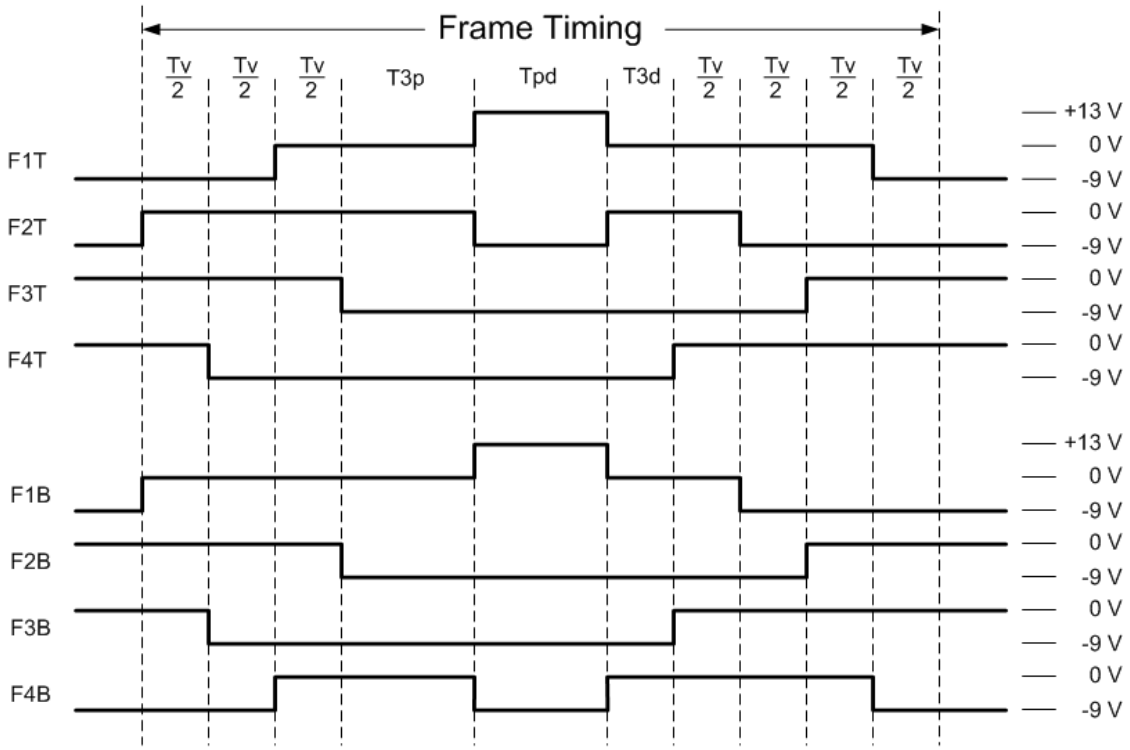

NOTE: See Table 22 for pin assignments.

Figure 28. Frame Timing Diagram

The charge in the photodiodes begins its transfer to the VCCD on the rising edge of the +13 V pulse and is completed by the falling edge of the +13 V pulse on F1T and F1B. During the time period when F1T and F1B are at +13 V antiblooming protection is disabled. The photodiode integration time ends on the falling edge of the +13 V pulse.

Downloaded from Arrow.com.

Line Timing Diagrams

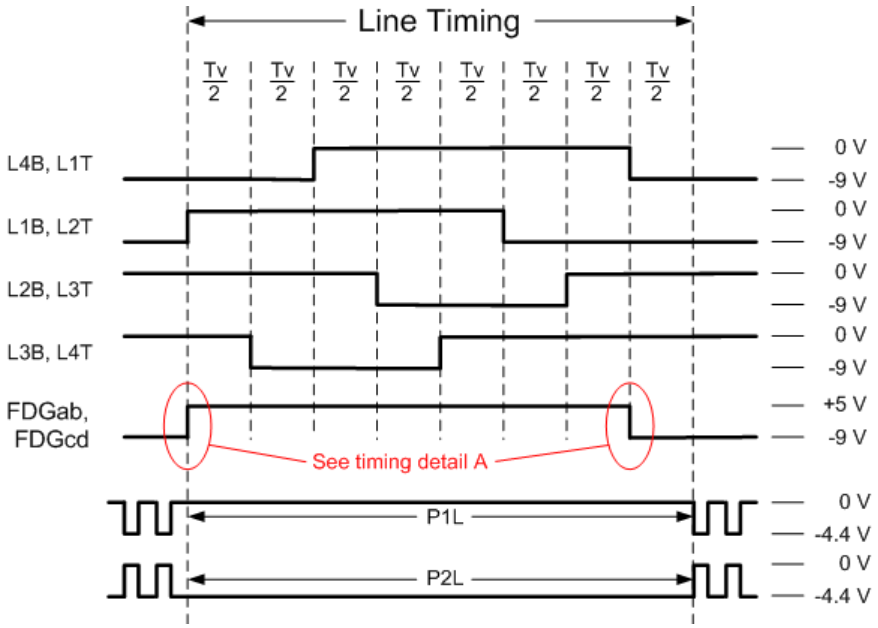

NOTE: See Table 23 for device pin assignments.

Figure 29. Line Timing Diagram

If the line is to be dumped then clock the FDGab and FDGcd pins as shown. This dumping process eliminates a line of charge and the HCCD does not have to be clocked.

To transfer a line from the VCCD to the HCCD without dumping the charge, hold the FDGab and FDGcd pins at a constant −9 V.

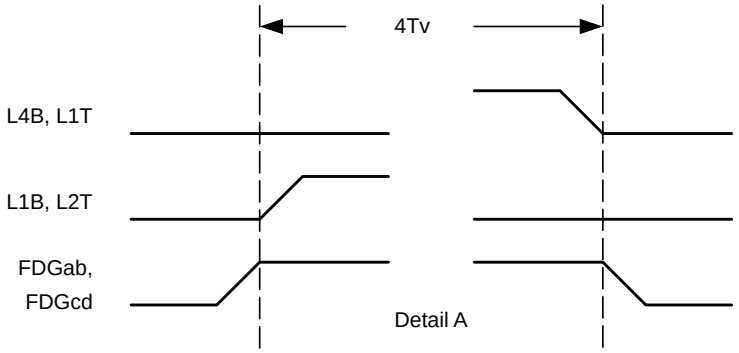

NOTE: See Table 23 for device pin assignments.

Figure 30. Fast Dump Gate Timing Detail A

When the VCCD is clocked while the FDGab and FDGcd pins are at +5 V, charge is diverted to a drain instead of transferring to the HCCD. The FDG pins must be at +5 V before the first VCCD timing edge begins its transition. The FDG pin must not begin its transition from +5 V back to −9 V until the last VCCD timing edge has completed its transition.

Downloaded from Arrow.com.

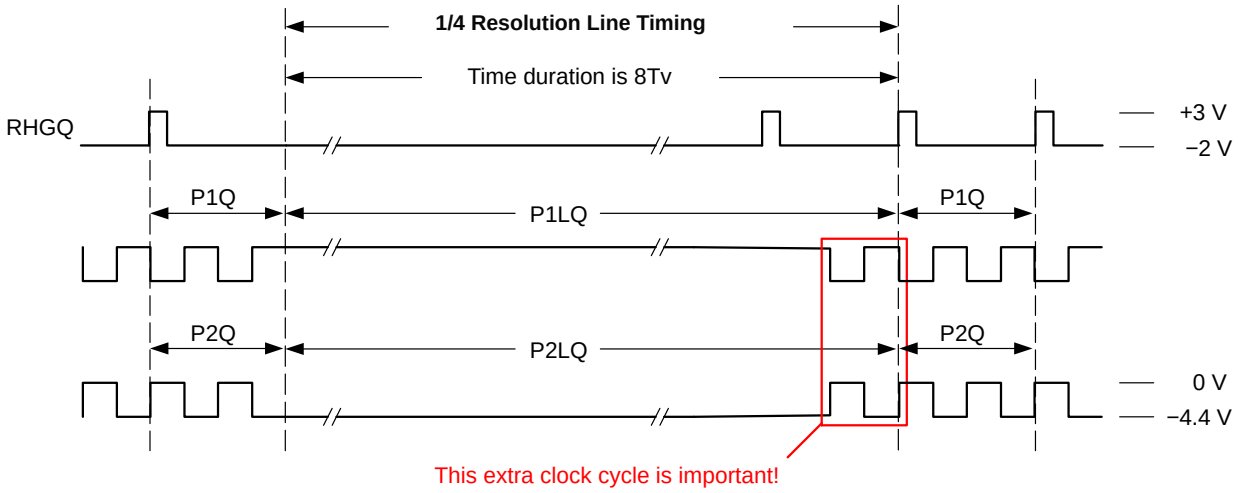

NOTE: See Table 23 center column for pin assignments.

Figure 31. 1/4 Resolution Line Timing Diagram

The HCCD 1/4 resolution timing has one HCCD clock cycle added. This does a one pixel shift of the HCCD before the 2− pixel charge summing starts on the output amplifier. The one pixel shift is necessary because of the odd number (11 pixels) of dummy pixels at the start of the HCCD. Without the one pixel shift the last dark reference columns would be summed with the first photoactive column instead of adding together the first two photoactive columns.

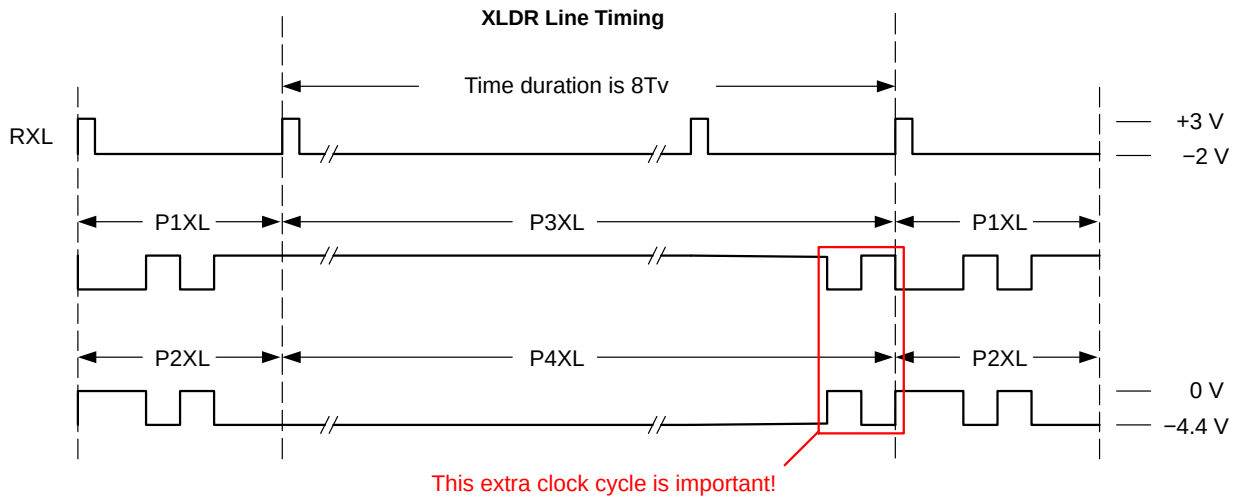

NOTE: See Table 23 right columns for pin assignments.

Figure 32. XLDR Line Timing Diagram

Like the 1/4 resolution mode, the XLDR timing also sums two pixels on the output amplifier sense node. Therefore it also requires one HCCD clock cycle within the line timing.

Downloaded from Arrow.com.

Electronic Shutter Timing Diagram

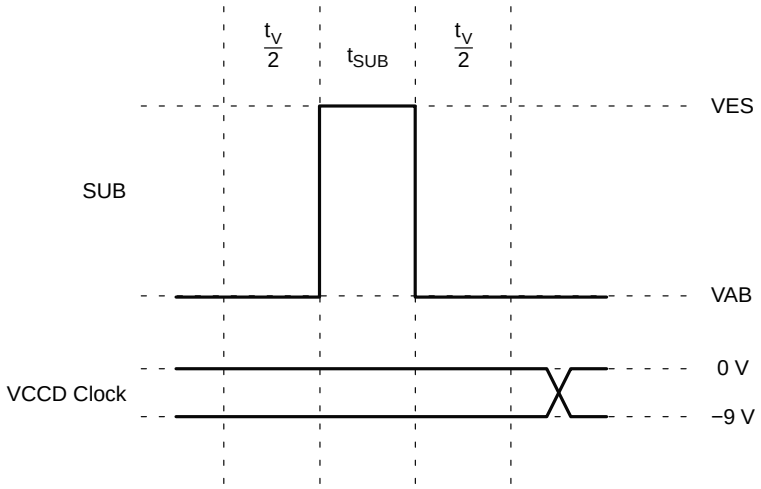

Figure 33. Electronic Shutter Timing Diagram

The electronic shutter pulse can be inserted at the end of any line of the HCCD timing. The HCCD should be empty when the electronic shutter is pulsed. A recommended position for the electronic shutter is just after the last pixel is read out of a line. The VCCD clocks should not resume until at least $t_V/2$ μs after the electronic shutter pulse has finished. The HCCD clocks can be run during the electronic shutter pulse as long as the HCCD does not contain valid image data.

For short exposures less than one line time, the electronic shutter pulse can appear inside the frame timing diagram of Figure 28. Any electronic shutter pulse transition should be $t_V/2$ away from any VCCD clock transition.

Downloaded from Arrow.com.

Pixel Timing Diagrams

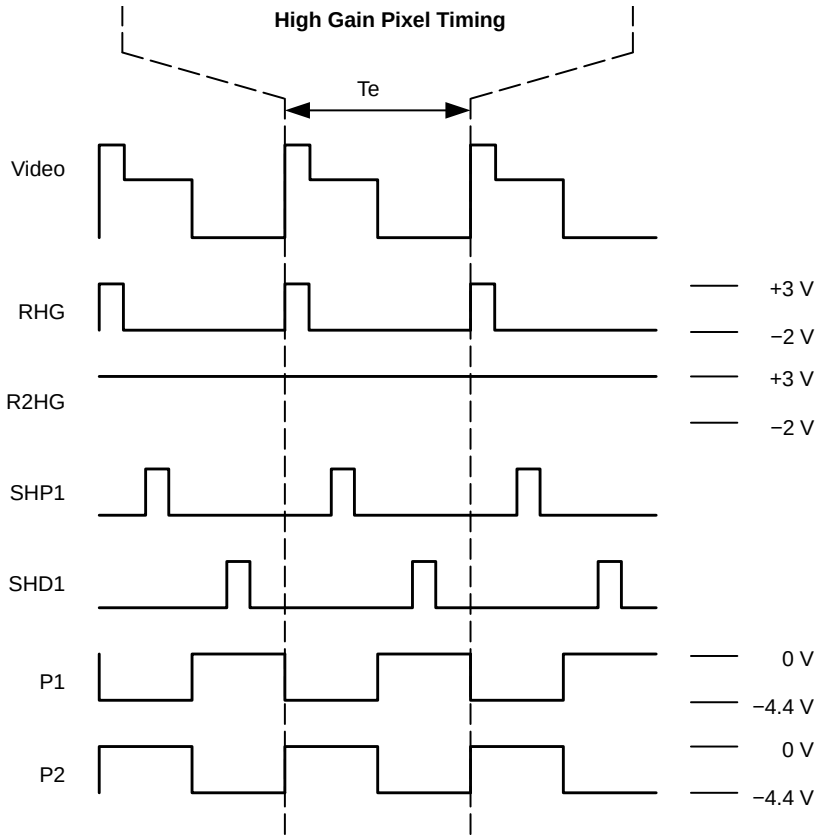

NOTE: See Table 24 left columns for pin assignments.

Figure 34. High Gain Pixel Timing

Use this pixel timing to read out every pixel at high gain. If the sensor is to be permanently operated at high gain, the R2ab and R2cd pins can be left floating or set to any DC voltage between +3 V and +5 V. They are internally biased to +4.3 V. The SHP1 and SHD1 pulses indicate where the camera electronics should sample the video waveform. The SHP1 and SHD1 pulses are not applied to the image sensor.

Downloaded from Arrow.com.

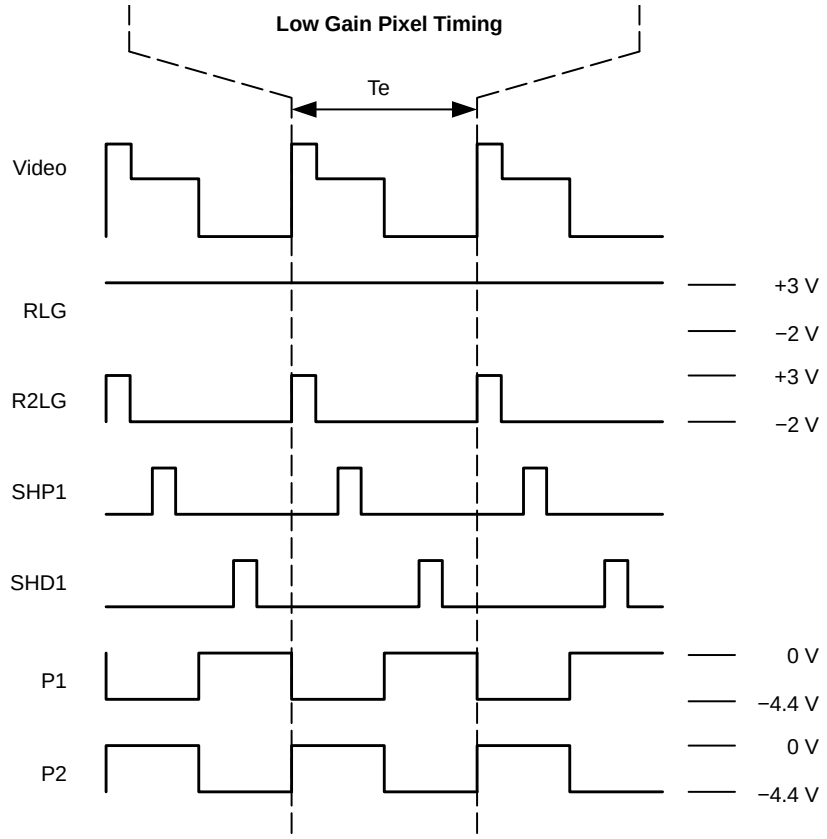

NOTE: See Table 24 left columns for pin assignments.

Figure 35. Low Gain Pixel Timing

Use this timing to read out every pixel at low gain. If the sensor is to be permanently operated at low gain, the Ra, Rb, Rc, and Rd pins can be set to any DC voltage between +3 V and +5 V. The SHP1 and SHD1 pulses indicate where the camera electronics should sample the video waveform. The SHP1 and SHD1 pulses are not applied to the image sensor.

Downloaded from Arrow.com.

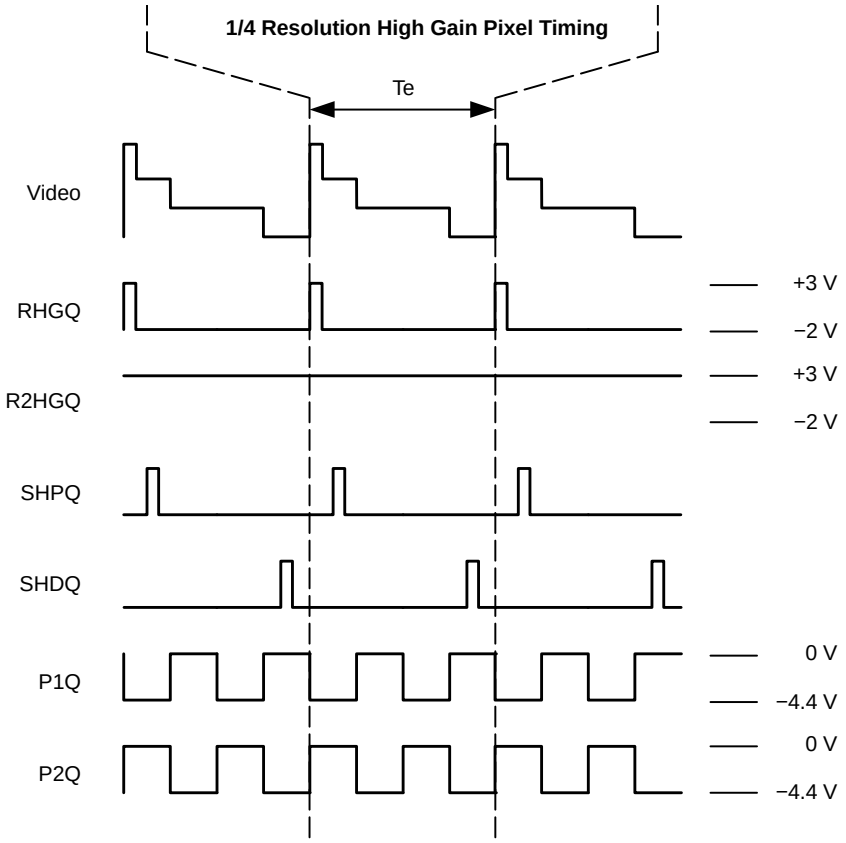

NOTE: See Table 24 center columns for pin assignments.

Figure 36. 1/4 Resolution High Gain Pixel Timing

Use this pixel timing to read out every pixel at high gain. If the sensor is to be permanently operated at high gain, the R2ab and R2cd pins can be left floating or set to any DC voltage between +3 V and +5 V. They are internally biased to +4.3 V. The SHPQ and SHDQ pulses indicate where the camera electronics should sample the video waveform. The SHPQ and SHDQ pulses are not applied to the image sensor.

The Ra, Rb, Rc, and Rd pins are pulsed at half the frequency of the HCCD clocks. This causes two pixels to be summed on the output amplifier sense node. The SHPQ and SHDQ clocks are also half the frequency of the HCCD clocks.

Downloaded from Arrow.com.

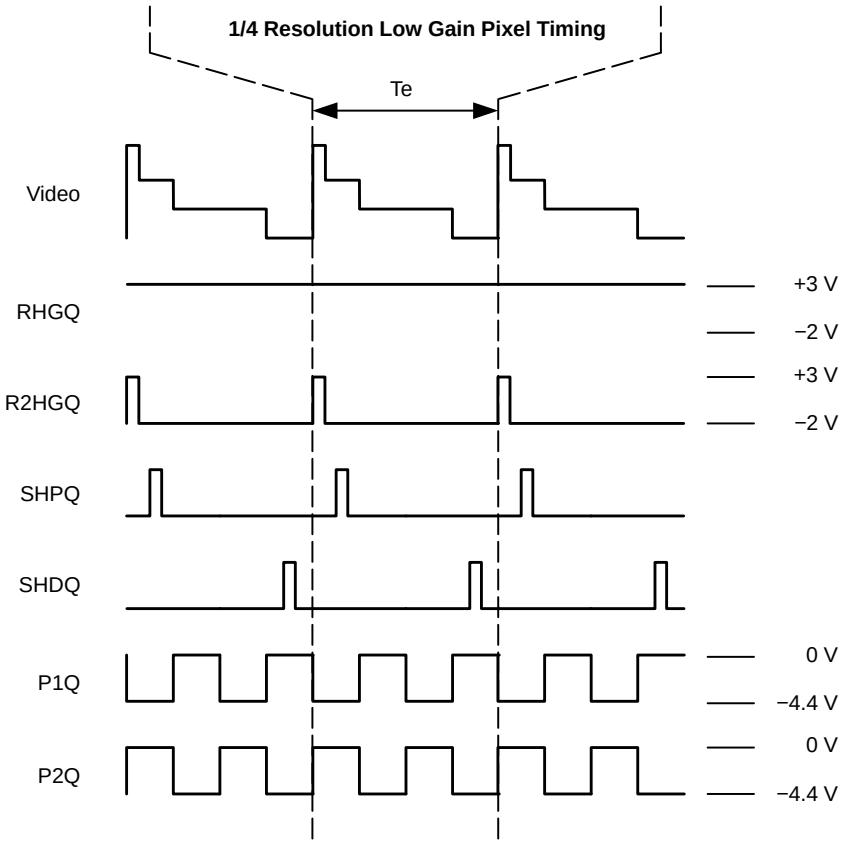

NOTE: See Table 24 center columns for pin assignments.

Figure 37. 1/4 Resolution Low Gain Pixel Timing

Use this timing to read out every pixel at low gain. If the sensor is to be permanently operated at low gain, the Ra, Rb, Rc, and Rd pins can be set to any DC voltage between +3 V and +5 V. The SHPQ and SHDQ pulses indicate where the camera electronics should sample the video waveform. The SHPQ and SHDQ pulses are not applied to the image sensor.

The R2ab, and R2cd pins are pulsed at half the frequency of the HCCD clocks. This causes two pixels to be summed on the output amplifier sense node. The SHPQ and SHDQ clocks are also half the frequency of the HCCD clocks.

Downloaded from Arrow.com.

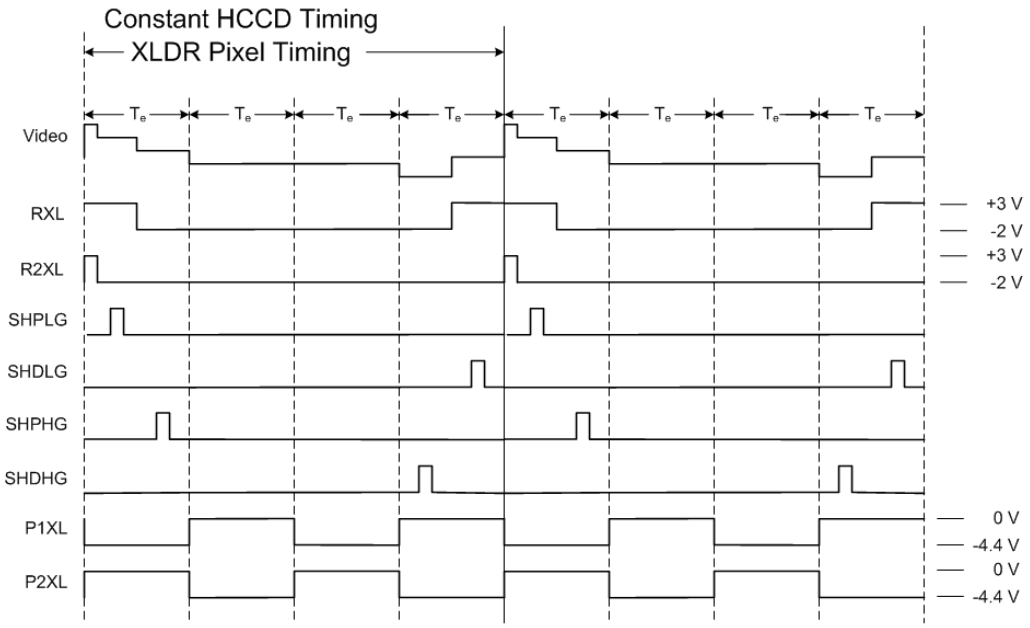

NOTE: See Table 24 right columns for pin assignments.

Figure 38. XLDR Timing with Constant HCCD. Operating at 20 MHz

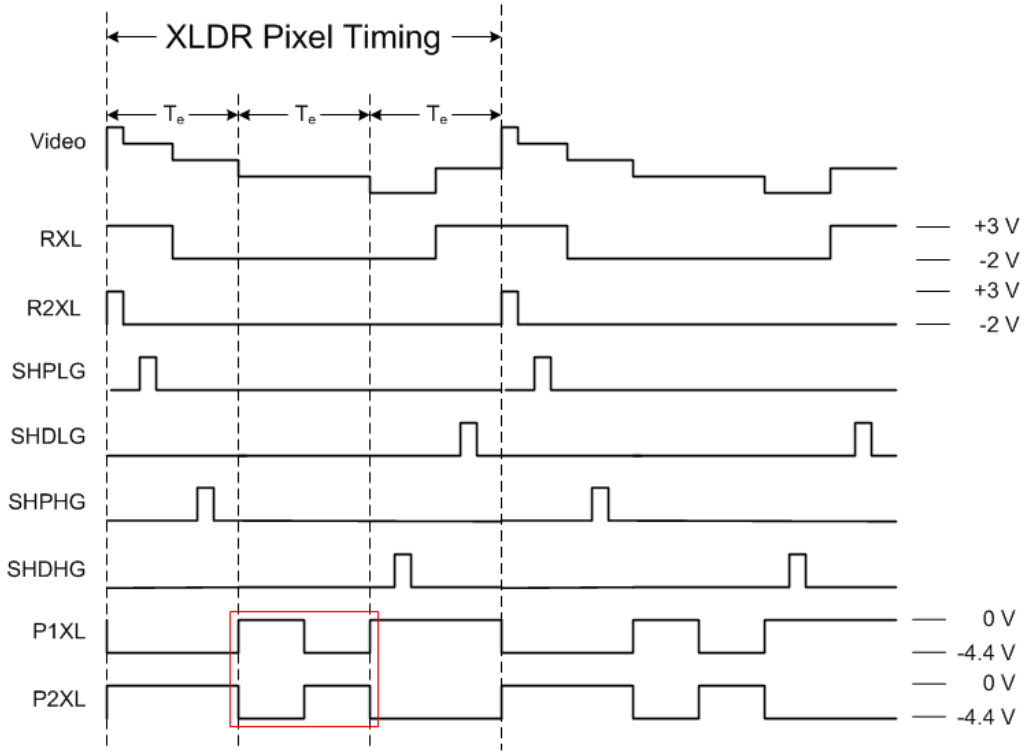

NOTE: See Table 24 right columns for pin assignments.

Figure 39. XLDR Timing with Variable HCCD Clocking

Use this pixel timing to operate the image sensor in the extended linear dynamic range mode (XLDR). This mode requires two sets of analog front end (AFE) signal processing electronics for each output. As shown in Figure 39, one AFE samples the pixel at low gain (SHPLG and SHDLG) and the other AFE samples the pixel at high gain (SHPHG and SHDHG).

Downloaded from Arrow.com.

Two HCCD pixels are summed on the output amplifier to obtain enough charge to fully use the 82 dB dynamic range of the XLDR timing. Combined with two−line VCCD summing, a total of 160,000 electrons of signal (4x 40,000) can be sampled with 12 electrons or less noise. 82 db linear dynamic range is very large. Make certain the camera optics is capable of focusing an 82 dB dynamic range image on the sensor. Lens flare caused by inexpensive optics or even dust on the lens will limit the dynamic range.

This timing shows the HCCD in Figure 39, not being clocked at a constant frequency. If this is a problem for the HCCD timing generator, then the HCCD may be clocked at a constant frequency at the expense of about 33% slower frame rate.

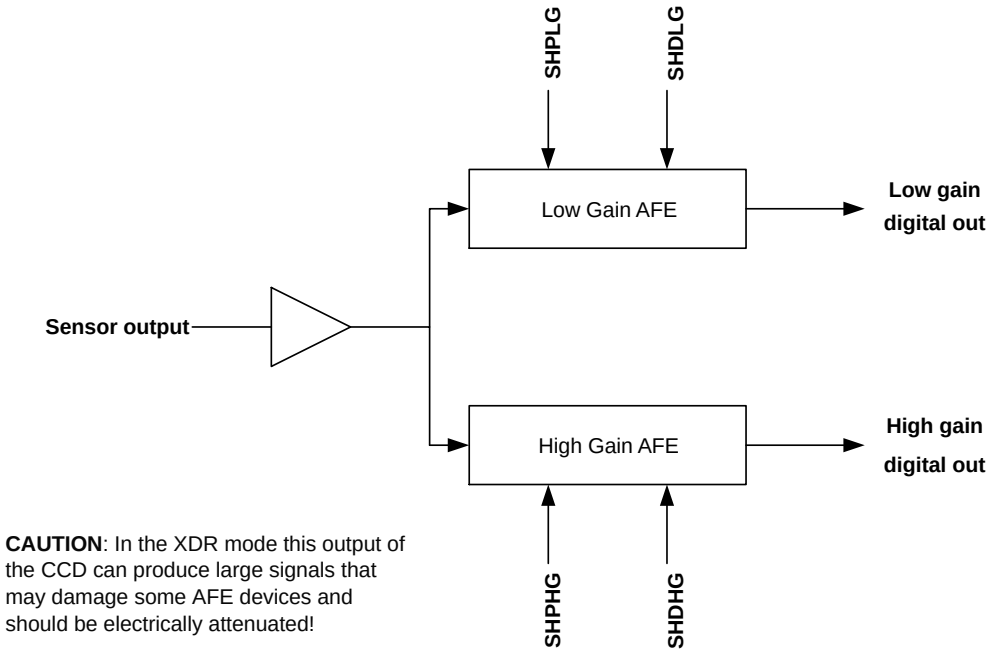

Figure 40. Block Diagram Showing the AFE Connections for XLDR Timing

VCCD Clock Rise and Fall Time

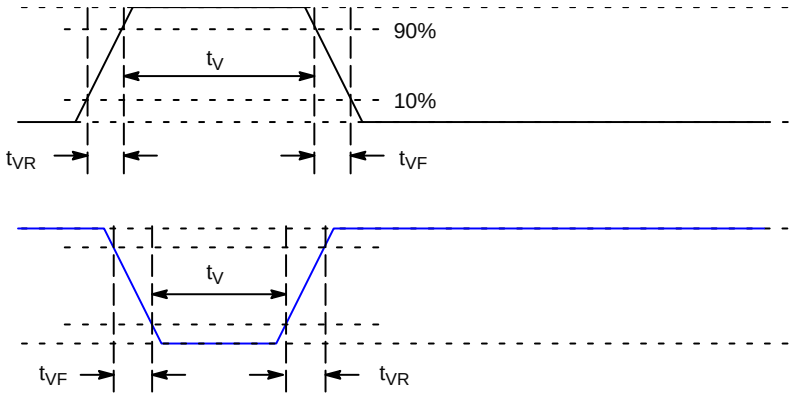

Figure 41. VCCD Clock Rise Time and Fall Time

Downloaded from Arrow.com.

MECHANICAL INFORMATION

Completed Assembly

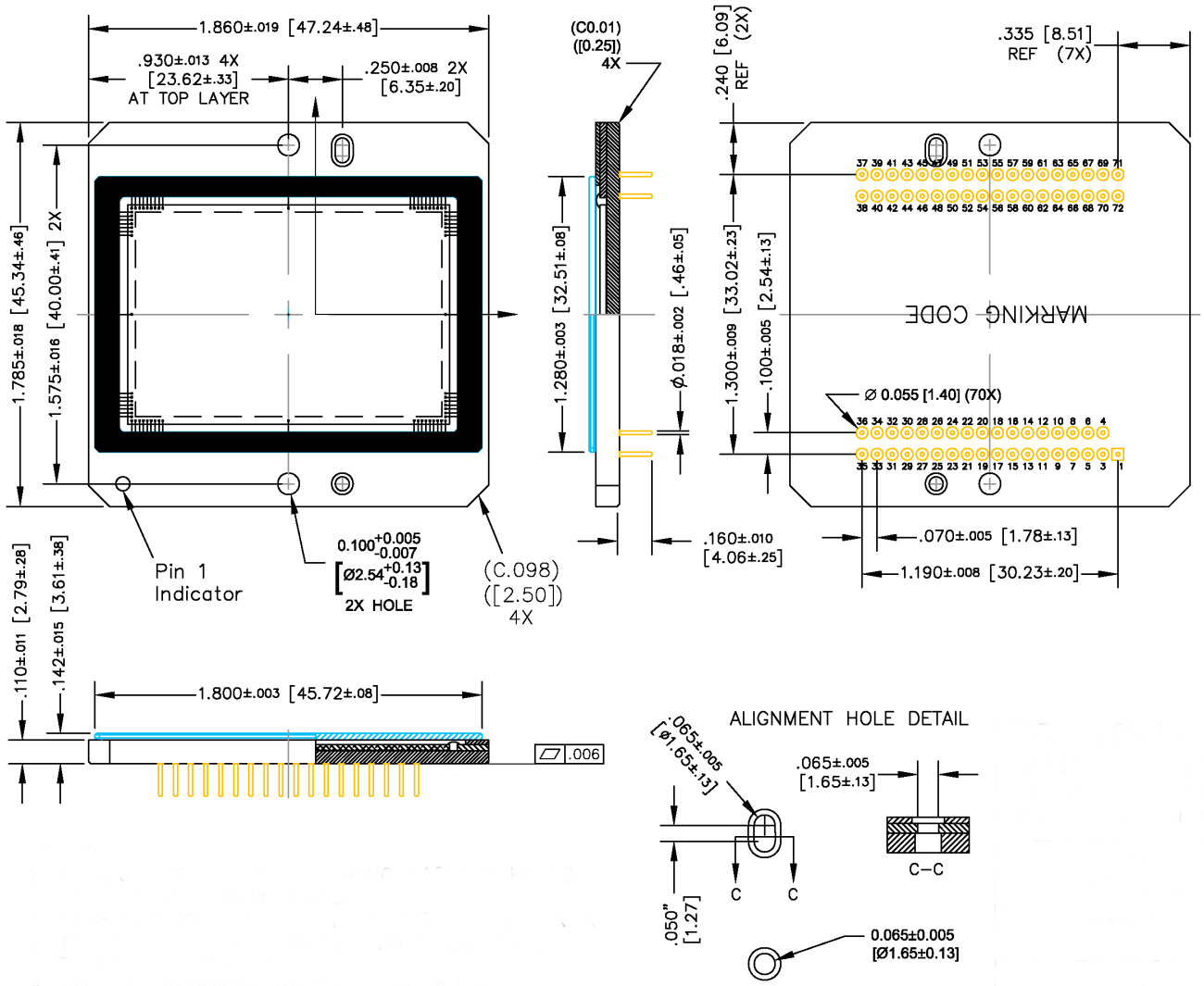

Notes:

1. See Ordering Information for marking code.
2. Cover glass not to overhang package holes or outer ceramic edges.
3. Glass epoxy not to extend over image array.
4. No materials to interfere with clearance through package holes.
5. Units: IN [MM]

Figure 42. Completed Assembly of Sealed Cover Glass Configuration (1 of 2)

Downloaded from Arrow.com.

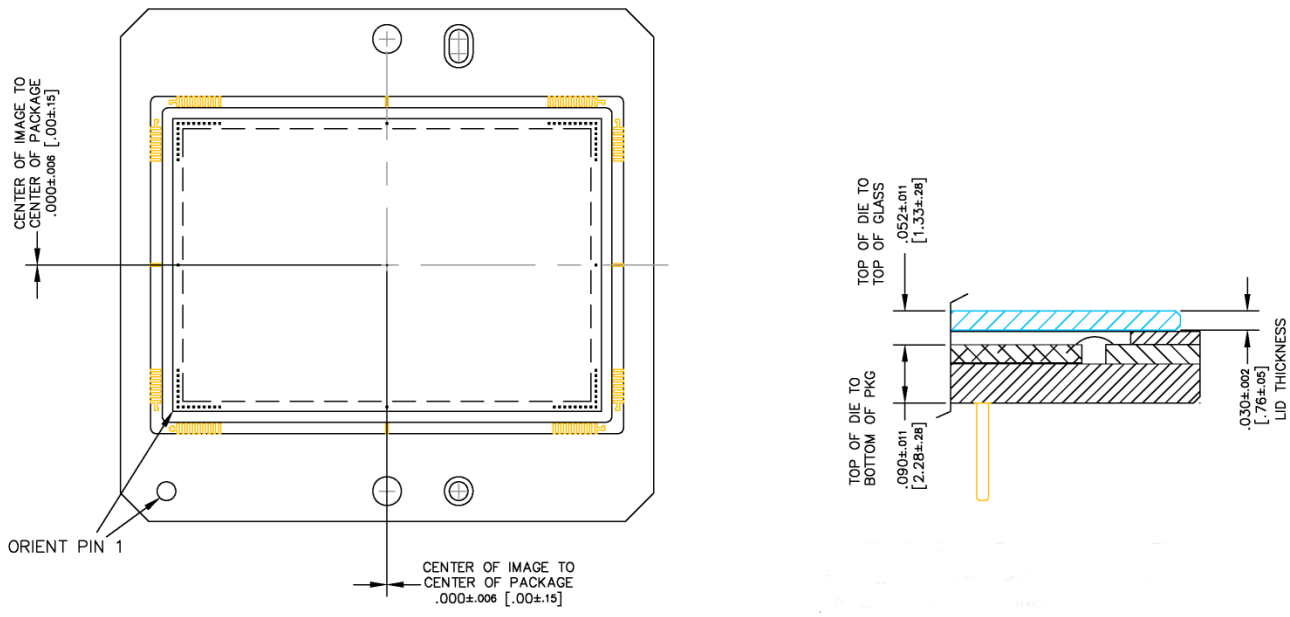

Notes:
1. Units IN [MM]

Figure 43. Completed Assembly of Sealed Cover Glass Configuration (2 of 2)

SHOWN WITH TAPED−ON COVER GLASS

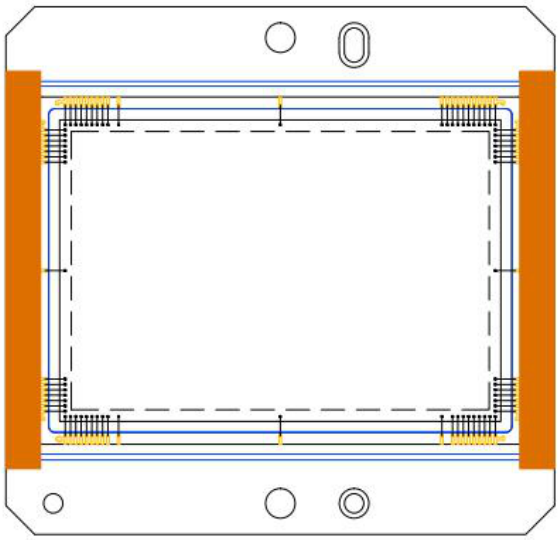

Figure 44. Completed Assembly View of Taped Cover Glass Configuration

Downloaded from Arrow.com.

Cover Glass, AR Coated, 2 Sides

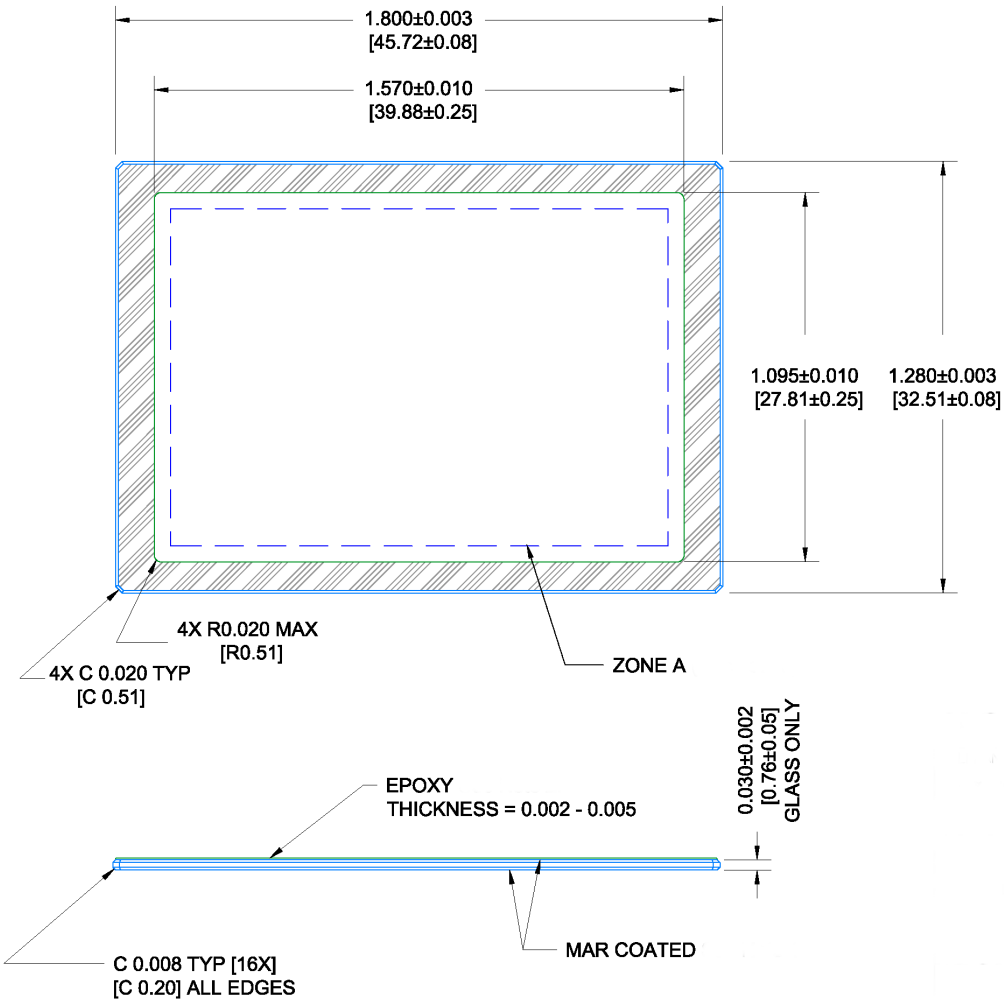

Notes:

1. Substrate = Schott D263T eco
2. Dust, Scratch, Inclusion Specification:
   a.) 20 μm Max size in Zone A
   b.) Zone A = 1.474 x 1.000 [16.43 x 10.08] Centered
3. MAR coated both sides
4. Spectral Transmission
   a.) 350 − 365 nm: T ≥ 88%
   b.) 365 − 405 nm: T ≥ 94%
   c.) 405 − 450 nm: T ≥ 98%
   d.) 450 − 650 nm: T ≥ 99%
   e.) 650 − 690 nm: T ≥ 98%
   f.) 690 − 770 nm: T ≥ 94%
   g.) 770 − 870 nm: T ≥ 88%
5. Units: IN [MM]

Figure 45. Cover Glass, AR Coated, 2 Sides

Downloaded from Arrow.com.

Cover Glass, Clear No Coatings (Taped)

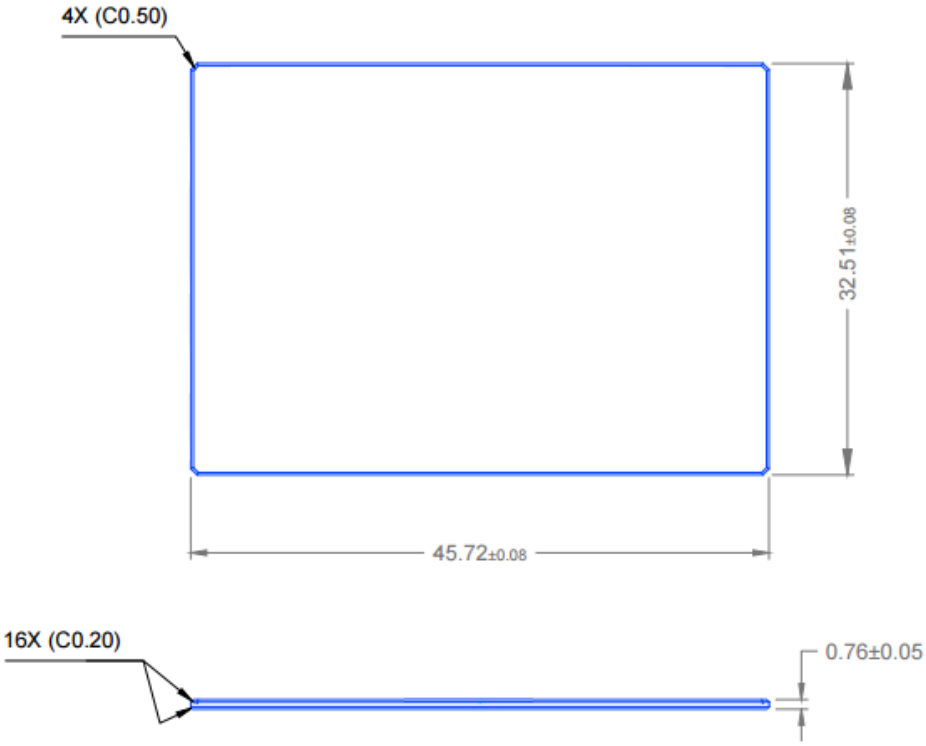

Notes:
1. Substrate = Schott D263T eco
2. Dust, Scratch, Inclusion Specification: None
3. No Optical Coatings on this Glass
4. Units: MM

Figure 46. Cover Glass, Clear No Coatings (Taped)

Downloaded from Arrow.com.

Cover Glass Transmission

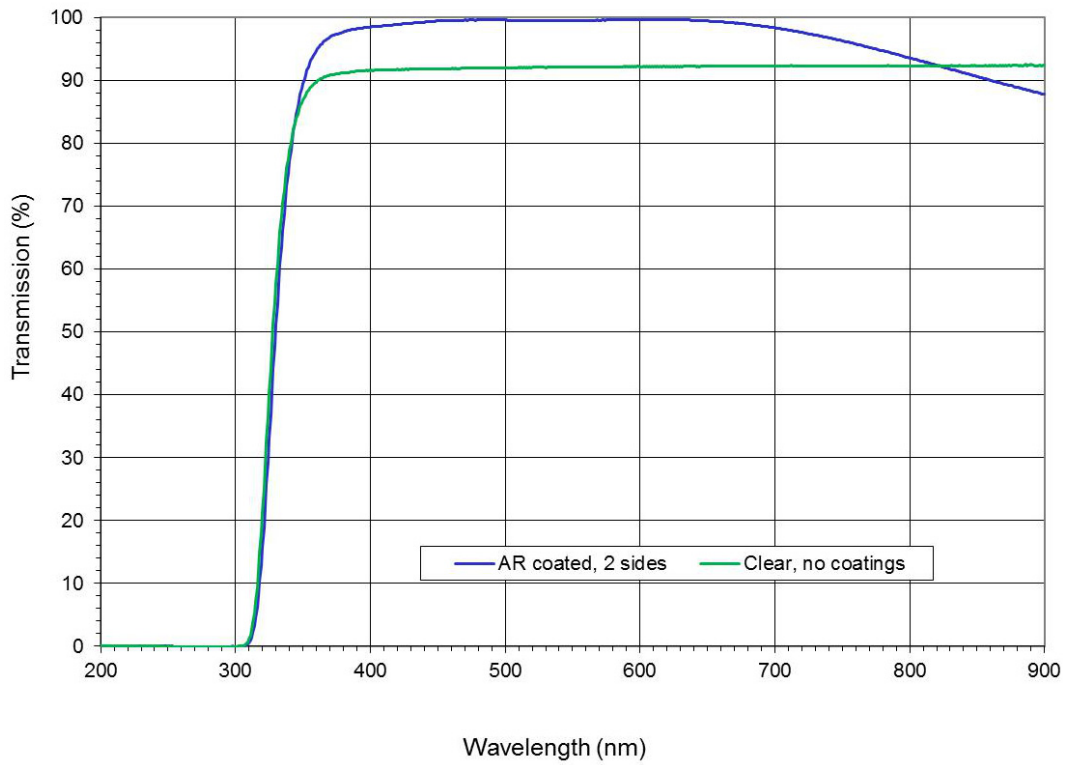

Figure 47. Cover Glass Transmission

For information on ESD and cover glass care and cleanliness, please download the *Image Sensor Handling and Best Practices* Application Note (AN52561/D) from www.onsemi.com.

For information on soldering recommendations, please download the Soldering and Mounting Techniques Reference Manual (SOLDERRM/D) from www.onsemi.com.

For quality and reliability information, please download the *Quality & Reliability* Handbook (HBD851/D) from www.onsemi.com.

For information on device numbering and ordering codes, please download the *Device Nomenclature* technical note (TND310/D) from www.onsemi.com.

For information on Standard terms and Conditions of Sale, please download Terms and Conditions from www.onsemi.com.

ON Semiconductor and ON are trademarks of Semiconductor Components Industries, LLC dba ON Semiconductor or its subsidiaries in the United States and/or other countries. ON Semiconductor owns the rights to a number of patents, trademarks, copyrights, trade secrets, and other intellectual property. A listing of ON Semiconductor's product/patent coverage may be accessed at www.onsemi.com/site/pdf/Patent−Marking.pdf. ON Semiconductor reserves the right to make changes without further notice to any products herein. ON Semiconductor makes no warranty, representation or guarantee regarding the suitability of its products for any particular purpose, nor does ON Semiconductor assume any liability arising out of the application or use of any product or circuit, and specifically disclaims any and all liability, including without limitation special, consequential or incidental damages. Buyer is responsible for its products and applications using ON Semiconductor products, including compliance with all laws, regulations and safety requirements or standards, regardless of any support or applications information provided by ON Semiconductor. "Typical" parameters which may be provided in ON Semiconductor data sheets and/or specifications can and do vary in different applications and actual performance may vary over time. All operating parameters, including "Typicals" must be validated for each customer application by customer's technical experts. ON Semiconductor does not convey any license under its patent rights nor the rights of others. ON Semiconductor products are not designed, intended, or authorized for use as a critical component in life support systems or any FDA Class 3 medical devices or medical devices with a same or similar classification in a foreign jurisdiction or any devices intended for implantation in the human body. Should Buyer purchase or use ON Semiconductor products for any such unintended or unauthorized application, Buyer shall indemnify and hold ON Semiconductor and its officers, employees, subsidiaries, affiliates, and distributors harmless against all claims, costs, damages, and expenses, and reasonable attorney fees arising out of, directly or indirectly, any claim of personal injury or death associated with such unintended or unauthorized use, even if such claim alleges that ON Semiconductor was negligent regarding the design or manufacture of the part. ON Semiconductor is an Equal Opportunity/Affirmative Action Employer. This literature is subject to all applicable copyright laws and is not for resale in any manner.

PUBLICATION ORDERING INFORMATION

LITERATURE FULFILLMENT:
Literature Distribution Center for ON Semiconductor
19521 E. 32nd Pkwy, Aurora, Colorado 80011 USA
Phone: 303−675−2175 or 800−344−3860 Toll Free USA/Canada
Fax: 303−675−2176 or 800−344−3867 Toll Free USA/Canada
Email: orderlit@onsemi.com

N. American Technical Support: 800−282−9855 Toll Free USA/Canada
Europe, Middle East and Africa Technical Support:
Phone: 421 33 790 2910
Japan Customer Focus Center
Phone: 81−3−5817−1050

ON Semiconductor Website: **www.onsemi.com**

Order Literature: http://www.onsemi.com/orderlit

For additional information, please contact your local Sales Representative

Downloaded from Arrow.com.