TAOGLAS



Datasheet

Iridium Certified Antenna

Part No:
IAA.01.121111

Description:

External magnetic mount Iridium antenna

Features:

1616 – 1626.5 MHz

Designed to work in conjunction with a 30*30cm Ground plane

Connector: SMA(M) ST

Cable: 1.2m RG-174

Custom cables and connectors available

Iridium has certified the IAA.01.121111 antenna for commercial use in connection with the Iridium Communications System

RoHS & REACH Compliant

Downloaded from Arrow.com.

1.	Introduction	3
2.	Specifications	4
3.	Antenna Characteristics	5
4.	2D Radiation Patterns	8
5.	3D Radiation Patterns	10
6.	Mechanical Drawing	11
7.	Packaging	12
	Changelog	13

Taoglas makes no warranties based on the accuracy or completeness of the contents of this document and reserves the right to make changes to specifications and product descriptions at any time without notice. Taoglas reserves all rights to this document and the information contained herein.

Reproduction, use or disclosure to third parties without express permission is strictly prohibited.

Ireland & USA ISO 9001:2015 Certified

Taiwan ISO 9001:2015 Certified

IATF16949

Downloaded from Arrow.com.

1. Introduction



The IAA.01 is a high-performance magnetic mount antenna which is designed specific to communicate efficiently with the Iridium® Satellite Communication system. The IAA.01 has been specifically designed to work on a 30*30cm ground plane.

The IAA.01 utilises the Taoglas expertise in ceramics by incorporating a ceramic patch tuned specifically for the antenna environment, giving greater stability. The antenna housing is strong, corrosive proof and waterproof to IP67. The magnetic mount allows for easy installation and removal between vehicles or assets, it is easily converted to an adhesive type for greater flexibility.

Iridium® has certified the IAA.01.121111 Antenna for commercial use in connection with the Iridium Communications System. Iridium Satellite LLC is the owner of “Iridium” and all other Iridium trademarks, service marks and logos contained herein.

The cable and connector are fully customizable, for more information contact your regional Taoglas Customer Support Team.

Downloaded from Arrow.com.

2. Specifications

Electrical	
Frequency Range (MHz)	**1616-1626.5MHz**
Centre Frequency	**1621MHz**
Peak Gain (dBi)	
With Ground plane(30x30cm)	3.7
Average Gain (dB)	
With Ground plane(30x30cm)	-2.1
Efficiency (%)	
With Ground plane(30x30cm)	62
Impedance	50Ω
VSWR	1.2
Polarization	RHCP
Mechanical	
Dimensions	40.5 x 38 x 12.3mm
Cable	1.2m of RG-174
Casing	ABS
Connector	SMA Male Straight
Ground Plane Size	30 x 30cm
Environmental	
Operation Temperature	-40°C to 85°C
Storage Temperature	-40°C to 85°C
Relative Humidity	40% to 95% RH
Termination	Ag (Environmentally Friendly PB Free)

Downloaded from Arrow.com.

3. Antenna Characteristics

3.1 Return Loss

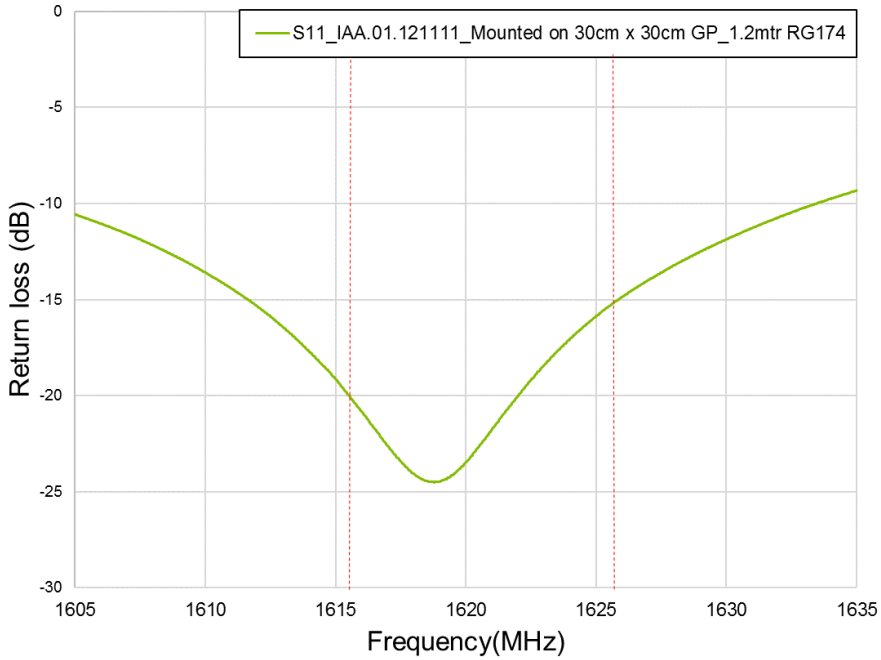

3.2 Efficiency

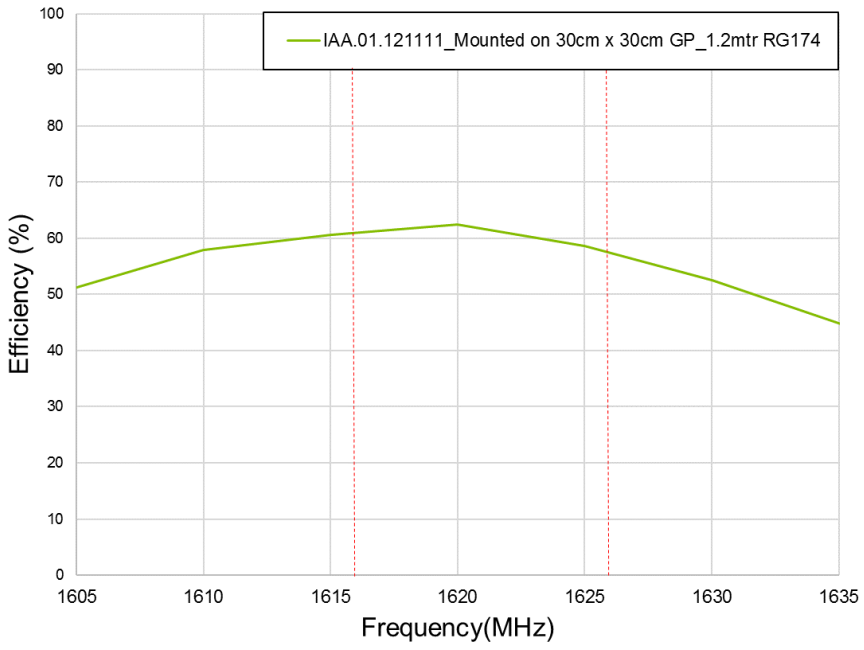

Downloaded from Arrow.com.

3.3 Average Gain

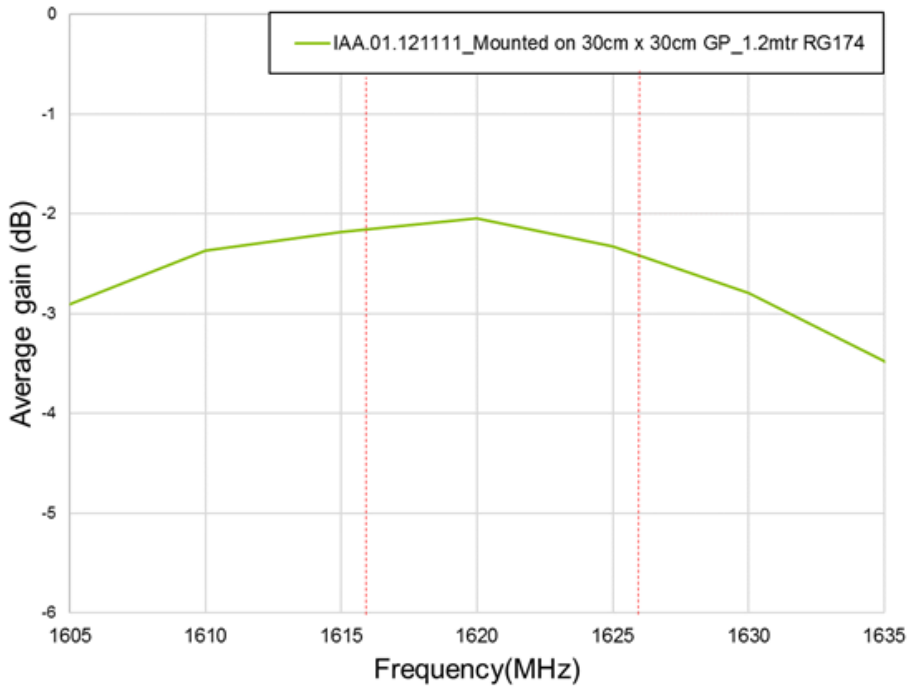

3.4 Peak Gain

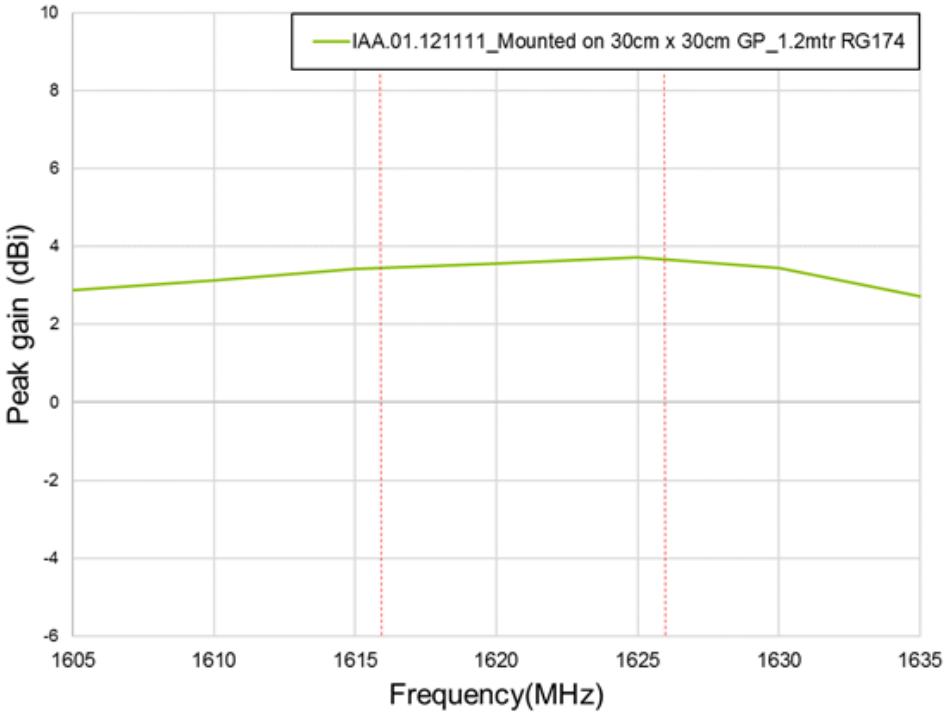

Downloaded from Arrow.com.

3.5 VSWR

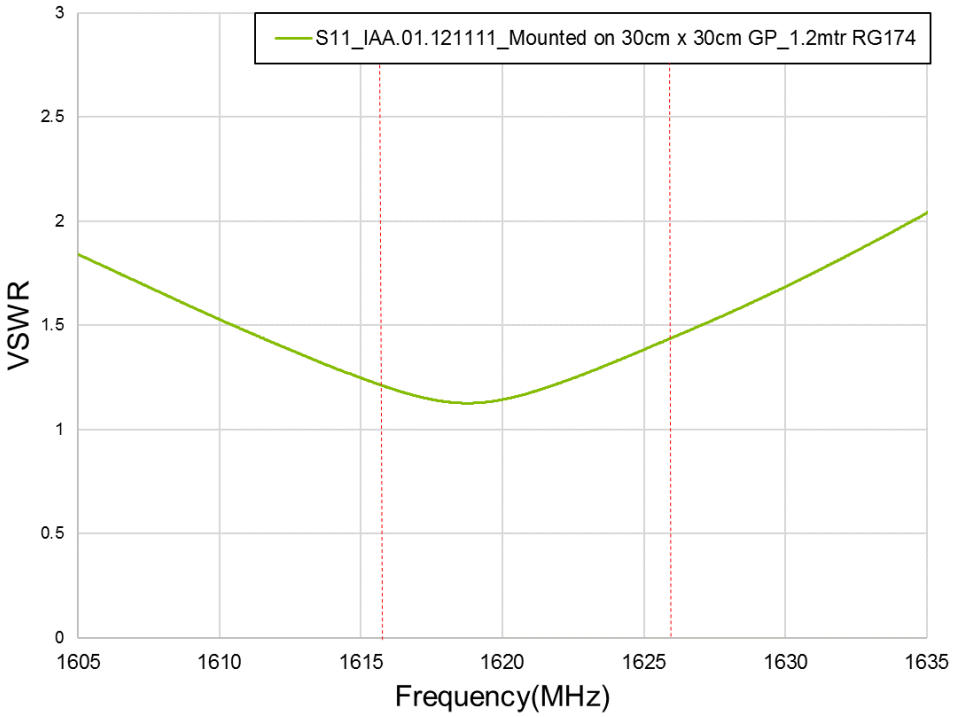

Downloaded from Arrow.com.

4. 2D Radiation Patterns

4.1 Test Setup on a 30*30 Ground Plane

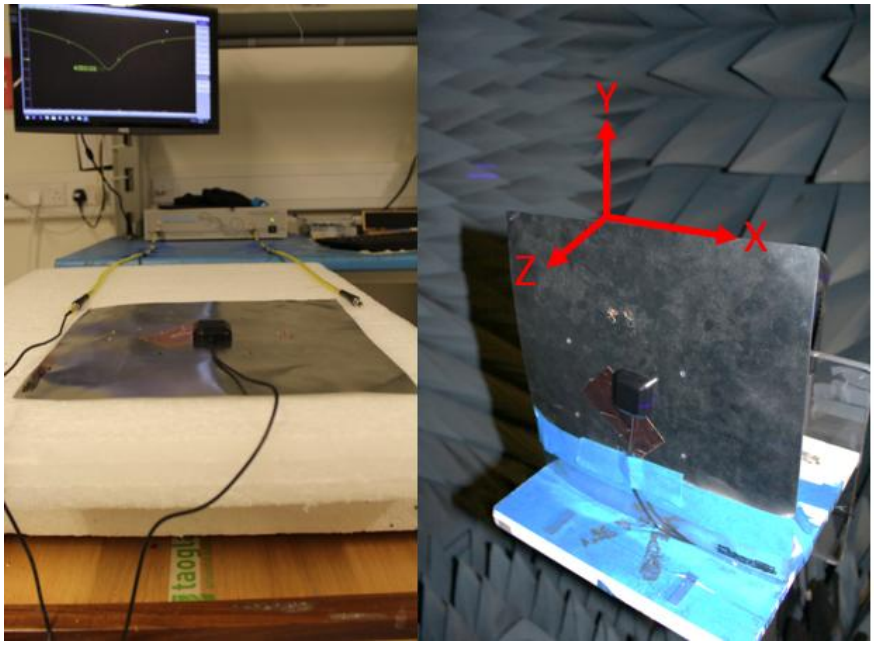

Downloaded from Arrow.com.

XY Plane

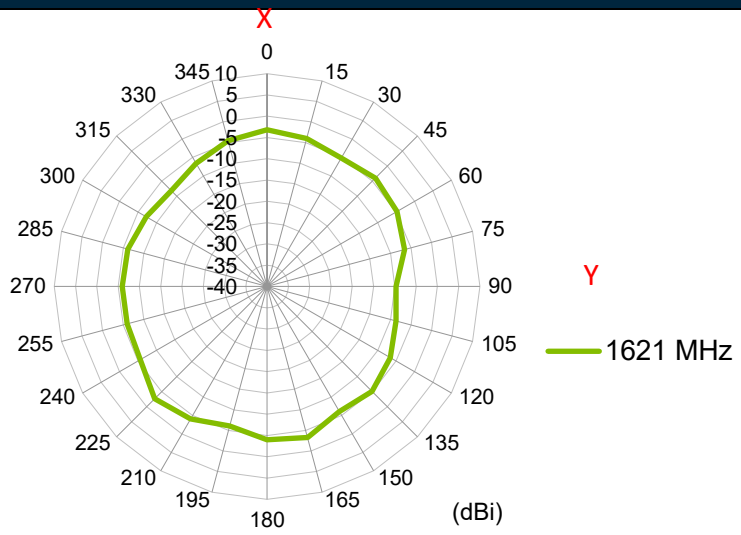

ZX Plane

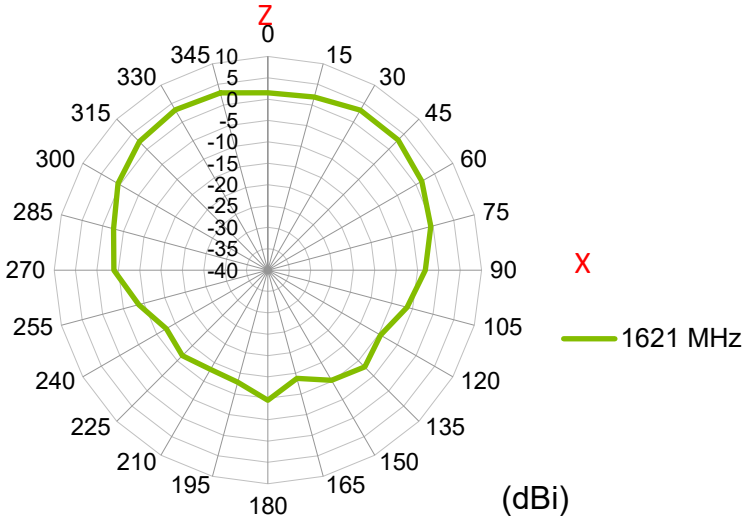

ZY Plane

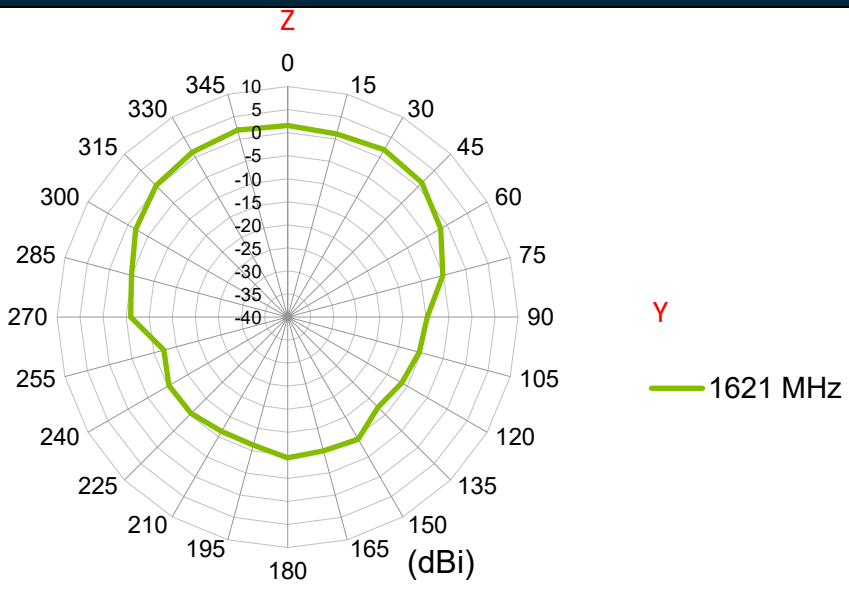

Downloaded from Arrow.com.

5. 3D Radiation Patterns

5.1 Mounted on 30cm x 30cm metal ground plane

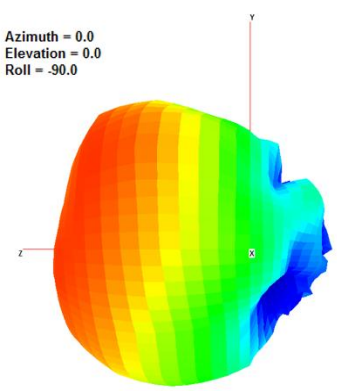

1621 MHz

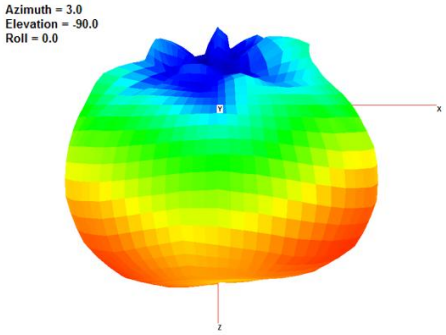

1621 MHz

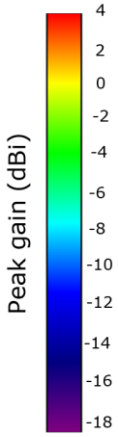

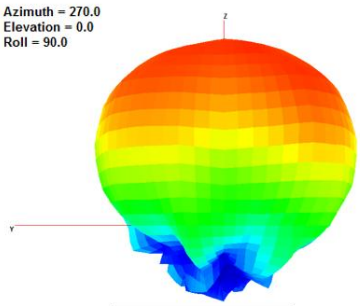

1621 MHz

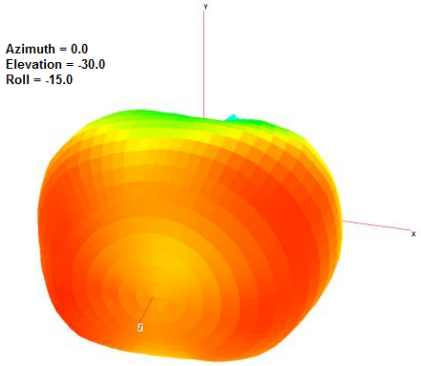

1621 MHz

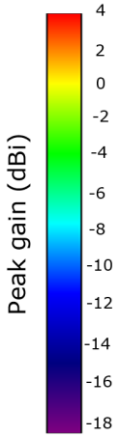

Downloaded from Arrow.com.

6. Mechanical Drawing (Units: mm)

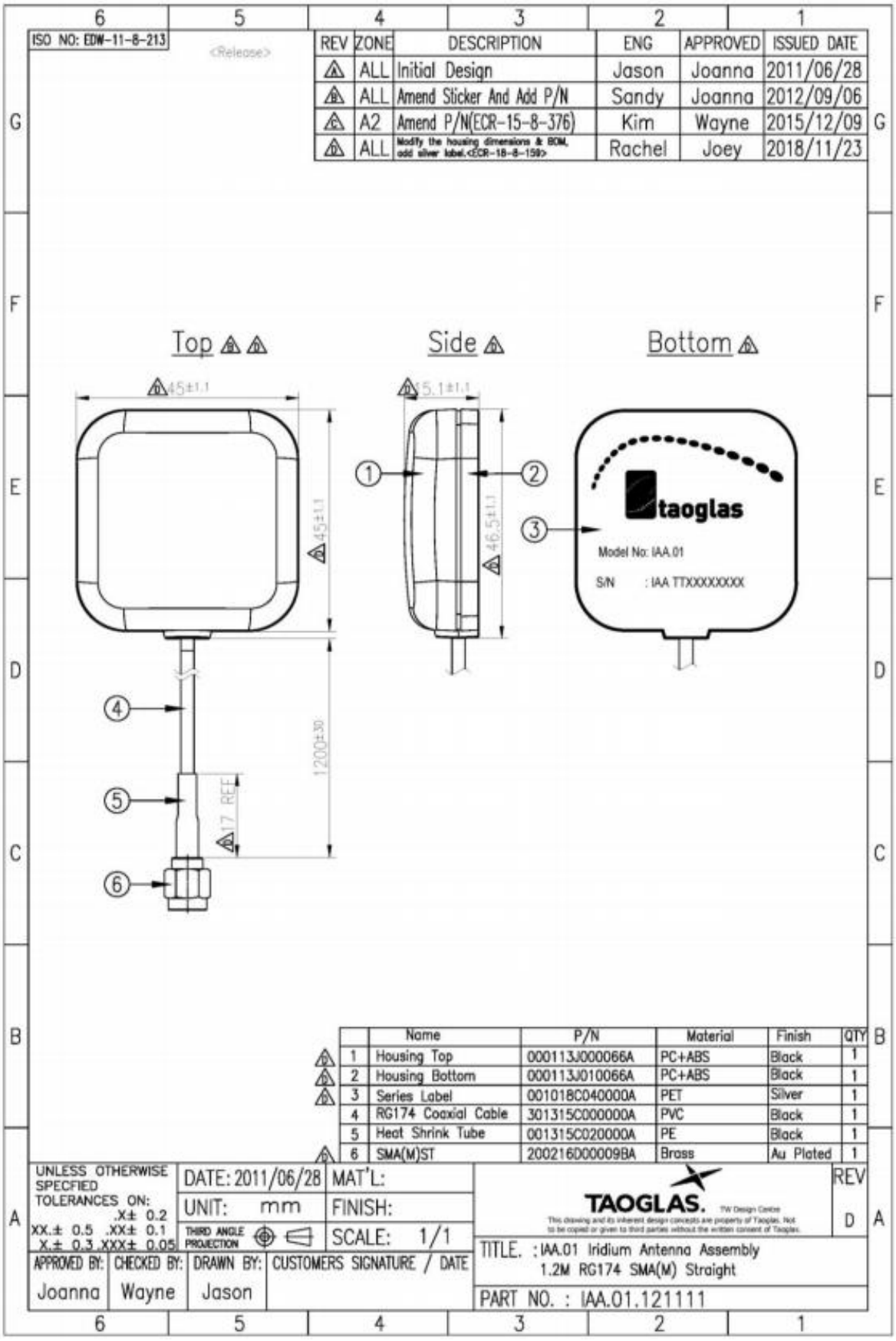

Downloaded from Arrow.com.

7. Packaging

100pcs IAA.01.121111 per Carton
Dimensions - 370*370*300mm
Weight - 105g

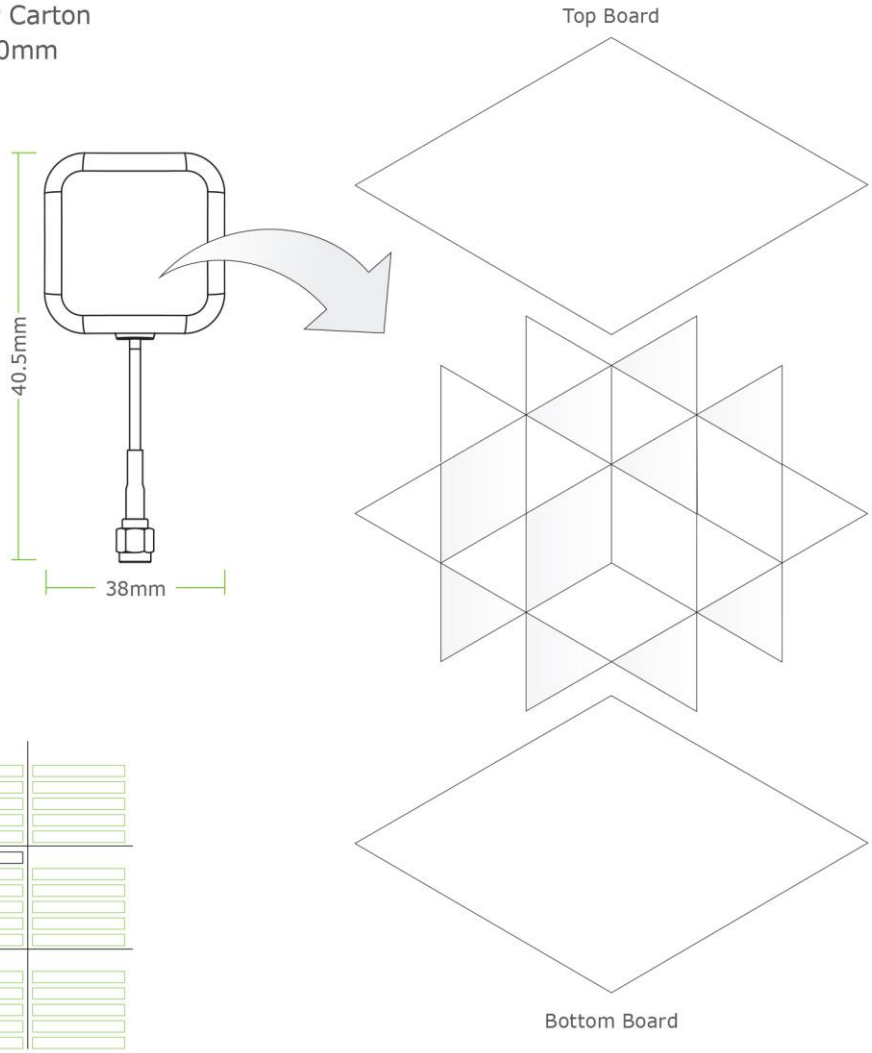

Upper Layer: 46 Pieces



Lower Layer: 54 Pieces



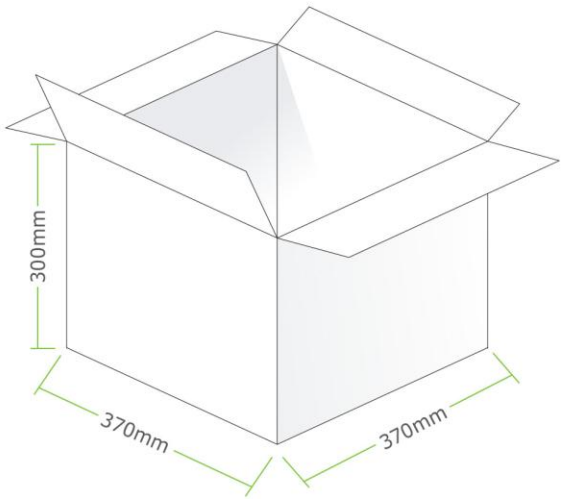

Downloaded from Arrow.com.

Changelog for the datasheet

SPE-13-8-009 – IAA.01.12111

Revision: F (current version)	
Date:	2026-10-01
Changes:	Removed bandwidth from spec table.
Changes Made by:	Conor McGrath

Previous Revisions

Revision: E	
Date:	2020-02-07
Changes:	New Test Data
Changes Made by:	Jack Conroy

Revision: D	
Date:	2019-05-02
Changes:	New Test Data
Changes Made by:	Jack Conroy

Revision: C	
Date:	2019-02-19
Changes:	Updated the drawing
Changes Made by:	Jack Conroy

Revision: B	
Date:	2014-02-27
Changes:	Iridium Certification
Changes Made by:	Aine Doyle

Revision: A (Original Release)	
Date:	2013-01-25
Changes:	
Changes Made by:	Aine Doyle

Downloaded from Arrow.com.

TAOGLAS®

www.taoglas.com

© Taoglas

Downloaded from Arrow.com.