REVISIONS					
REV	ECO	DESCRIPTION	DATE	BY	APPR
A1	-	RELEASE NEW DRAWING	26/SEP/22	MILO	TOMMY

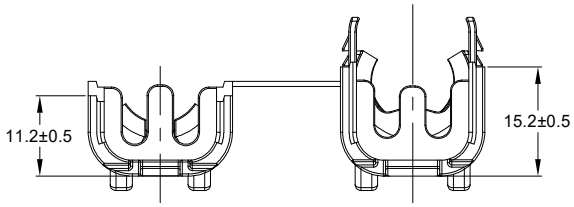

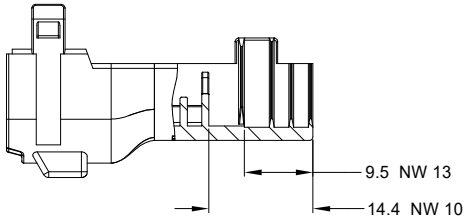

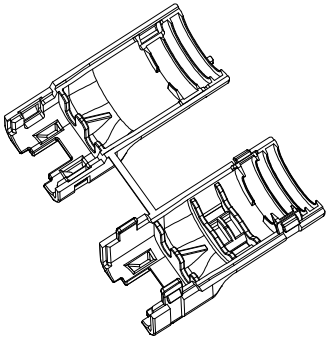

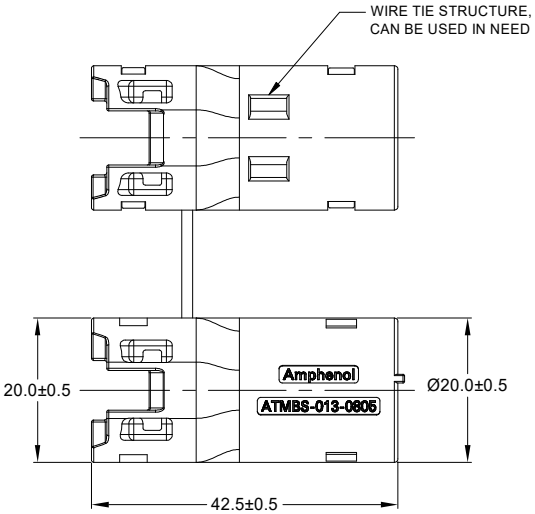

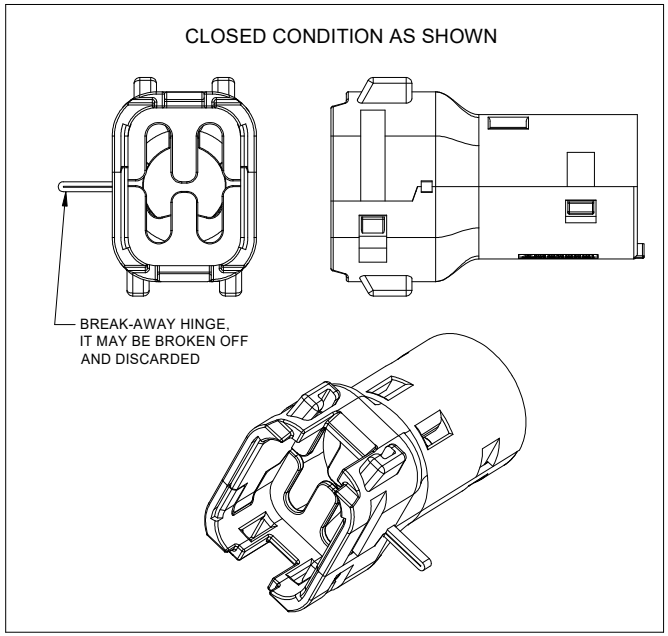

NOTES: UNLESS OTHERWISE SPECIFIED

1. MATERIAL: PA66; COLOR: BLACK .
2. THIS PART MATES WITH ATM06-08SX-* PLUG WITH ANY MODIFICATION THAT DOES NOT INCLUDE AN END CAP. (X = A,B,C,D KEYS, * = MODIFICATION AND COLORS)
3. CABLE EXIT DESIGNED FOR CORRUGATED TUBE NW 10 AND 13.
4. RoHS COMPLIANT
5. ALL DIMENSIONS ARE FOR REFERENCE USE ONLY.

QUANTITY	PART NUMBER	DESCRIPTION	ITEM
	ATMBS-013-0805	REF:1028-013-0805	

MATERIALS LIST

UNLESS OTHERWISE SPECIFIED
1) All dimensions are in metric(mm).
2) Tolerances are as follows:
1 PL DEC ±0.30
2 PL DEC ±0.15
3 PL DEC ±0.08
Fractions ±1/64
Angles ±1°
3) Note reference = X

MATERIAL SPECIFICATIONS:
WEIGHT:6.26g

PROCESS SPECIFICATIONS:

NEXT ASS'Y:

SIGNATURES		DATE
DRAWN:	MILO.DONG	26/SEP/22
CHECKED:	SULLEN.ZHANG	27/SEP/22
ENGINEER:		
APPROVAL:	TOMMY.XIE	28/SEP/22
CUSTOMER:		

THIS DRAWING IS SUPPLIED FOR INFORMATION ONLY. DESIGN FEATURES, SPECIFICATIONS AND PERFORMANCE DATA SHOWN HEREON ARE THE PROPERTY OF THE AMPHENOL CORPORATION. NO RIGHTS OF REPRODUCTION ARE IMPLIED. ALL DIMENSIONS ARE SUBJECT TO NORMAL MANUFACTURING VARIATIONS.

Amphenol

Sine Systems - www.amphenol-sine.com
44724 Morley Drive
Clinton Township, MI 48036

BACKSHELL,PLUG, 8 POS,
ATM ,STRAIGHT,BLACK

SIZE	TYPE	DWG NO:	REVISION
B	C-	ATMBS-013-0805	A1

SCALE: NONE SHEET 1 OF 1

TITLE: BACKSHELL,PLUG, 8 POS, ATM ,STRAIGHT,BLACK
DWG NO: ATMBS-013-0805
REV: A1
SH: 1
OF: 1

Downloaded from Arrow.com.