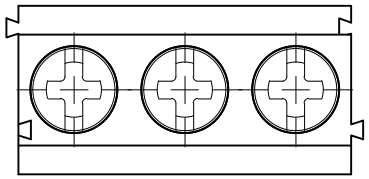

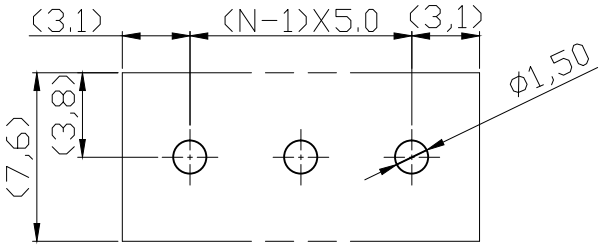

P.C.B. LAYOUT

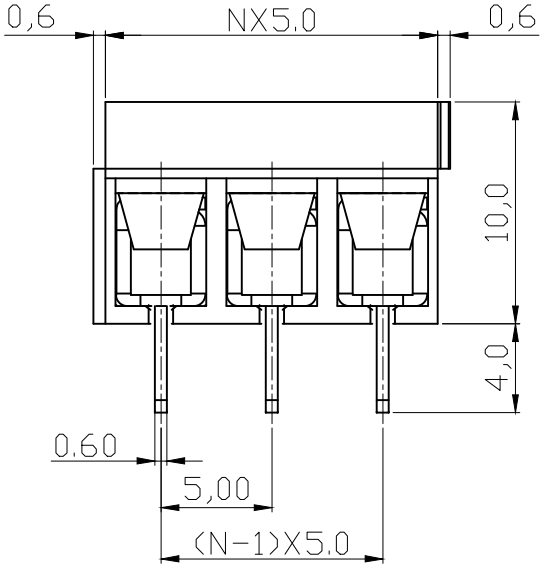

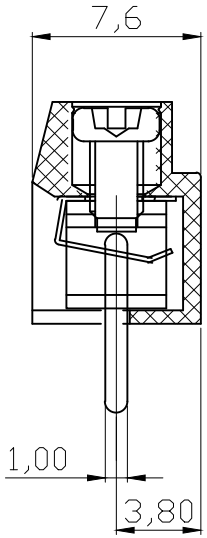

N=Number of contacts

Material

Terminal body
(metal housing): Brass stamped
Terminal screw: Steel Zinc plating "+/-" slot type
Wire guard: Stainless steel
Surface of solder tail: Tin plated
Insulator (housing): Thermoplastic (UL94V-0) ,Green

Electrical

Voltage rating: 300VAC
Current rating: 8A
Wire range:
Solid wire(AWG): 14-26
Stranded wire(AWG): 14-26
Torque(Lb-In): 3.5
Screw: M2.5
Wire strip length: 5-6mm
Withstanding Voltage: 1.6KV
Operating temperature: -40°C to +115°C
Soldering temperature: 250°C±10°C/5 Sec
Safety Approval: c us

RoHS compliant

Unit: mm

② File No.: E349947

Scale	1:1						Date	Name	Customer-No.
TOLERANCE						Drawn	29.07.2009	Dean	
X.	±0.50					Approved	18.04.2016	Joanna	ASSMANN WSW-No. A-TB500-T3xx
X.X	±0.30								
X.XX	±0.10								Drawing-No. ASS 3593 CO rev02
DIM	TOL	②	Add UL	18.04.2016	Joanna				
X.°	±1°	①	Drawn	29.07.2009	Dean				
X.X°	±X°								Replace / Sheet
Angle	TOL	Id.	Modification	Date	Name				

ASSMANN WSW components

SVxxxx

Downloaded from Arrow.com.