PRODUCT CATALOG

HIROSE ELECTRIC CO.,LTD.

FH58/FH58M Series

0.2/0.25mm Pitch, Height 0.9mm, Top and Bottom Contact, Back Flip, High Retention Force FPC Connector

FH™ Flip-Lock Pioneer Hirose

P= 0.2/0.25 mm — P=0.2/0.25mm

Back Flip

Top/Bottom Contact

Aug.1.2026 Copyright 2026 HIROSE ELECTRIC CO., LTD. All Rights Reserved.

Product Page
https://www.hirose.com/en/product/series/FH58

Sep. 2024

Downloaded from Arrow.com.

Features

1. Space-Saving

The combination of a fine pitch of 0.2mm/0.25mm and narrow depth of 3.1mm saves board space.
*The depth of long actuator type is 3.4mm

Low profile, narrow pitch, and narrow depth create the space savings.

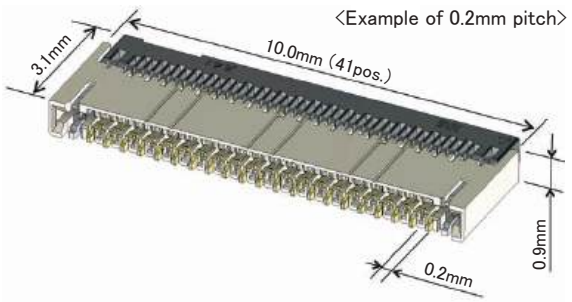

2. High FPC Retention Force

Metal locking tabs at both side of the connector provide high FPC retention force.
Being movable, the metal locking tab allows this connector to accept horizontal FPC insertions; it provides a clear tactile click and increased retention force when the FPC is inserted.

Multi-Functional Metal Locking Tabs

[FPC in place]

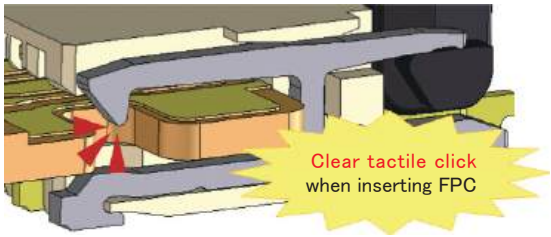

[Locked]

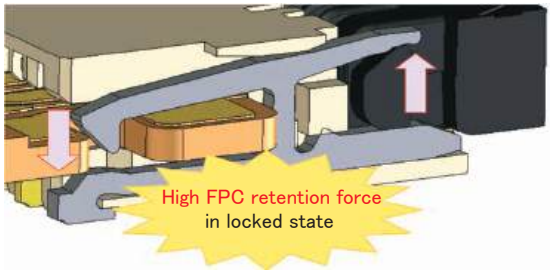

3. High Reliability Top and Bottom Contact Design

Top and bottom spring contacts follow up-and-down movement of the FPC to provide secure connectivity.

High Contact Reliability with Bottom Spring Contact

When bottom contact is used, FPC is lifted upward.

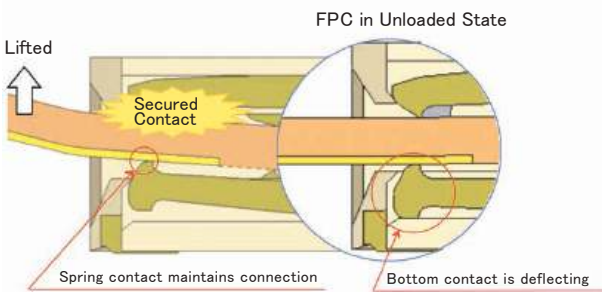

Aug.1.2026 Copyright 2026 HIROSE ELECTRIC CO., LTD. All Rights Reserved.

Downloaded from Arrow.com.

4. Supports High-Speed Transmissions

Excellent impedance characteristics enables high speed transmission.
By utilizing differential pairs of identical contacts (even-even contacts or odd-odd contacts) these connectors are able to provide superb transmission characteristics and have achieved compliance with the eDP (ver.1.3), MIPI (D-PHY) and USB3.0 standards.

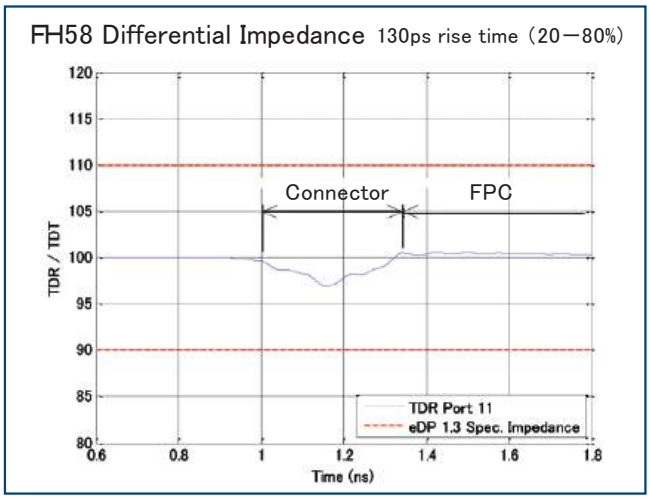

5. Environmental Compatibility

Halogen-free
No chlorine or bromine exceeding the standard values are used in this connector.

* As defined by IEC 61249-2-21
Br : 900ppm Max. , Cl : 900ppm Max. ,
Br+ Cl : 1500ppm Max.

6. Support Housing Reinforced

The FH58S and SA types feature reinforced housing with a horizontal wall that is 0.1 mm thicker to enhance breaking strength during insertion and removal. The specifications remain unchanged.

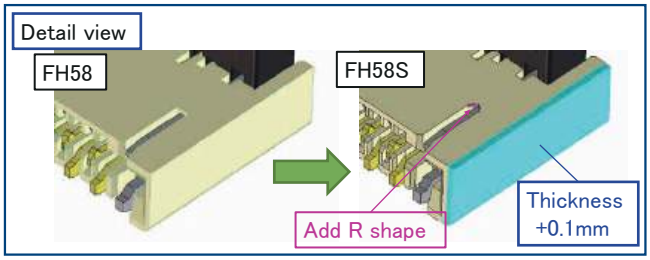

Aug.1.2026 Copyright 2026 HIROSE ELECTRIC CO., LTD. All Rights Reserved.

Downloaded from Arrow.com.

Aug.1.2026 Copyright 2026 HIROSE ELECTRIC CO., LTD. All Rights Reserved.

Product Specifications

Rated Current	0.2A	Operating Temperature (Note 1)	-55 to +85℃
Rated Voltage	30Vrms AC	Operating Humidity Range	RH 90% Max. (No Condensation)
		Storage Temperature (Note 2)	-10 to +50℃
		Storage Humidity Range	RH 90% Max. (No Condensation)

Note 1 : Includes temperature rise caused by current flow.
Note 2 : Storage refers to the long-term storage condition for unused products before the board mounting.
Operating temperature and humidity range apply when the product is not powered after PCB mounting and when temporarily stored during transportation.

Compatible FPC Terminal Specifications	t=0.2±0.02 Gold Plating

Item	Standards	Condition
Insulation Resistance	50MΩ Min.	Measured at 100V DC
Withstanding Voltage	No flashover or dielectric breakdown	90V AC for 1 min.
Contact Resistance	300mΩ Max.(0.2mm pitch products) 200mΩ Max. (0.25mm pitch products) ＊Includes FPC conductor resistance.	Measured at 1mA
Mating Durability	Contact Resistance: 300mΩ Max. (0.2mm pitch products) 200mΩ Max. (0.25mm pitch products) No damage, cracks or part dislocation.	10 times
Vibration Resistance	No electrical discontinuity of 1μs or more Contact Resistance: 300mΩ Max. (0.2mm pitch products) 200mΩ Max. (0.25mm pitch products) No damage, cracks or part dislocation.	Frequency 10 to 55 Hz, Half amplitude 0.75mm, 10 cycles in each of the 3 axis
Shock Resistance	No electrical discontinuity of 1μs or more Contact Resistance: 300mΩ Max. (0.2mm pitch products) 200mΩ Max. (0.25mm pitch products) No damage, cracks or part dislocation.	Acceleration: 981m/s^2 duration: 6 ms Sine halfwave : 3 times each in 3 axial both directions
Steady-State Moisture Resistance	Contact Resistance: 300mΩ Max. (0.2mm pitch products) 200mΩ Max. (0.25mm pitch products) Insulation Resistance: 50MΩ Min. No damage, cracks or part dislocation.	Leave in a temperature of 40℃ and humidity of 90 to 95% for 96 hours.
Temperature Cycle	Contact Resistance: 300mΩ Max. (0.2mm pitch products) 200mΩ Max. (0.25mm pitch products) Insulation Resistance: 50MΩ Min. No damage, cracks or part dislocation.	Temperature: -55 to +15 to +35 to +85 to +15 to +35℃ Time: 30 min. -- > 2 to 3 min. -- > 30 min. -- > 2 to 3 min. 5 cycles under the above conditions
Solder Heat Resistance	No deformation in appearance and no significant rattling of terminals, etc.	Reflow: In recommended Temperature Profile Hand solder: 350±10℃ , 5 sec.

Materials / Finish

Component	Material	Color / Finish	Remarks
Insulator	LCP	Beige	UL94V-0
	PA	Black	
Contact	Phosphorous Bronze	Nickel Barrier Gold Plating	-
Retention Tab		Pure Tin Reflow Plating	

Downloaded from Arrow.com.

Product Number Structure

Refer to the chart below when determining the product specifications from the product number.
Please select from the product numbers listed in this catalog when placing orders.

FH58 M A - 41S - 0.25 SHW (99)

❶ ❷ ❸ ❹ ❺ ❻ ❼

❶ Series Name	FH58	❺ Contact Pitch	0.2mm, 0.25mm
❷ Connector Type	None: 0.2mm pitch M: 0.25mm pitch S: Housing Reinforced Type	❻ Contact Type	SHW: SMT Horizontal Staggered Mounting Type
❸ Actuator Type	None: Actuator - Standard Type A: Actuator - Long Type	❼ Specifications	None: Standard (5,000 pcs per reel) (99) : For Trial Production (500 pcs per reel)
❹ No. of Pos.	21,25,31,35,41,51,61,71, 81: 0.2mm pitch 7: 0.25mm pitch		

Aug.1.2026 Copyright 2026 HIROSE ELECTRIC CO., LTD. All Rights Reserved.

Downloaded from Arrow.com.

FH58(M) Connector Dimensions

FH58(M) Series
(0.2mm / 0.25mm pitch, Standard Actuator Type)

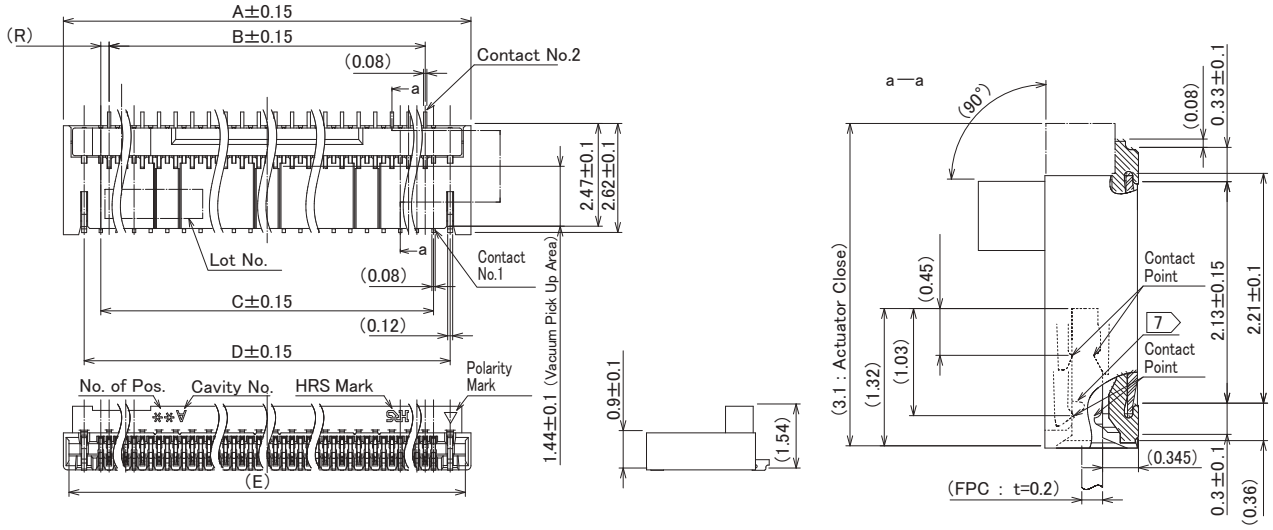

1 : The dimension in parentheses are for reference.
2 : The coplanarity of the contact and retention tab lead should be 0.1mm Max.
3 : To be delivered with tape and reel packages.
See the packaging specifications for details.
4 : Sink holes or slits could be added for improvements.
5 : Black spots may appear on the mold, however this does not represent a quality issue.
6 : This product satisfies halogen free requirements defined as 900ppm maximum chlorine, 900ppm maximum bromine, and 1500ppm maximum total of chlorine and bromine.
7 : 7 Shows hook part of the locking metal tabs.

Unit : mm

Part No.	HRS No.	No. of Pos.	A	B	C	D	E	R
FH58-21S-0.2SHW(##)	CL0580-3812-0-##	21	5.8	3.6	4.0	4.8	5.53	0.2
FH58-31S-0.2SHW(##)	CL0580-3827-0-##	31	7.8	5.6	6.0	6.8	7.53	
FH58-35S-0.2SHW(##)	CL0580-3810-0-##	35	8.6	6.4	6.8	7.6	8.33	
FH58-41S-0.2SHW(##)	CL0580-3801-5-##	41	9.8	7.6	8.0	8.8	9.53	
FH58-51S-0.2SHW(##)	CL0580-3807-0-##	51	11.8	9.6	10.0	10.8	11.53	
FH58M-7S-0.25SHW(##)	CL0580-3811-0-##	7	3.5	1.0	1.5	2.5	3.23	0.25

【Specification Number】
None: Standard (5,000 pcs per reel)
(99) : For Trial Production (500 pcs per reel)

Aug.1.2026 Copyright 2026 HIROSE ELECTRIC CO., LTD. All Rights Reserved.

Downloaded from Arrow.com.

FH58A Connector Dimensions

FH58A Series
(0.2mm pitch, Long Actuator Type)

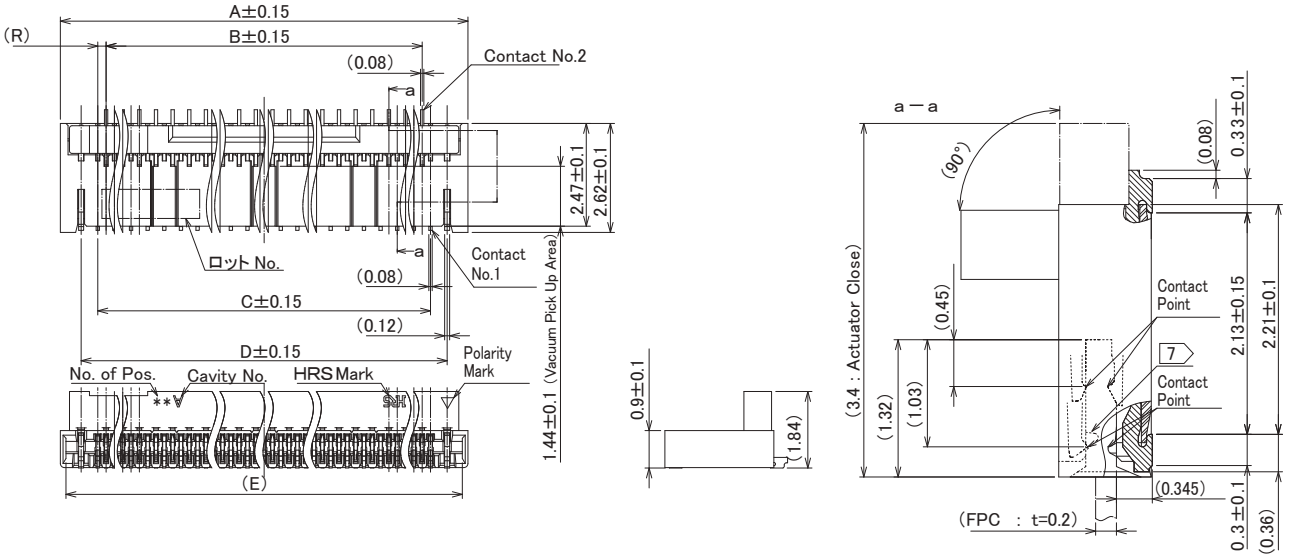

1 : The dimension in parentheses are for reference.
2 : The coplanarity of the contact and retention tab lead should be 0.1mm Max.
3 : To be delivered with tape and reel packages.
See the packaging specifications for details.
4 : Sink holes or slits could be added for improvements.
5 : Black spots may appear on the mold, however this does not represent a quality issue.
6 : This product satisfies halogen free requirements defined as 900ppm maximum chlorine, 900ppm maximum bromine, and 1500ppm maximum total of chlorine and bromine.
7 : 7 Shows hook part of the locking metal tabs.

Unit : mm

Part No.	HRS No.	No. of Pos.	A	B	C	D	E
FH58A-61S-0.2SHW(##)	CL0580-3803-0-##	61	13.8	11.6	12.0	12.8	13.53

【Specification Number】
None: Standard (5,000 pcs per reel)
(99) : For Trial Production (500 pcs per reel)

Aug.1.2026 Copyright 2026 HIROSE ELECTRIC CO., LTD. All Rights Reserved.

Downloaded from Arrow.com.

Recommended PCB Mounting Pattern, Metal Mask Dimensions

FH58(A) Series
(P=0.2mm pitch, Standard/Long Actuator Type)

Recommended PCB Mounting Pattern

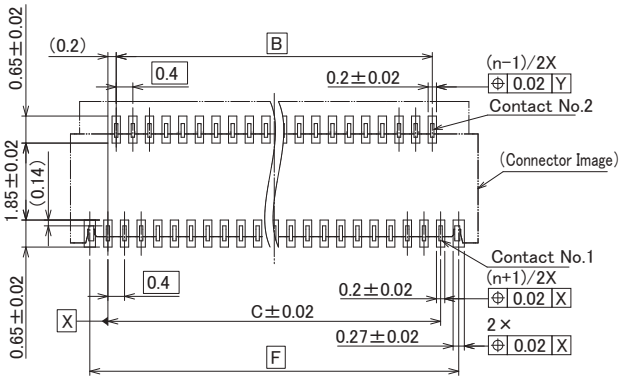

Recommended Metal Mask Dimension

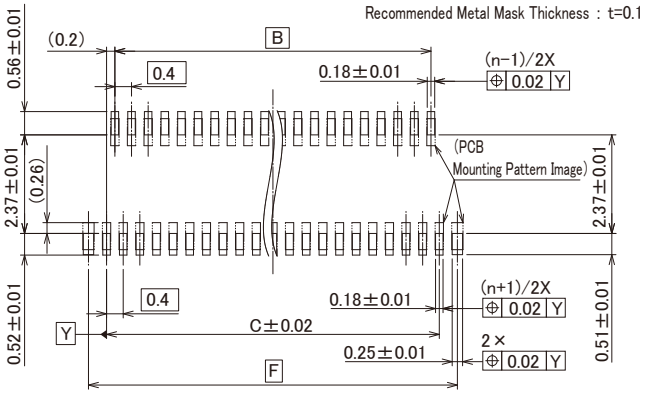

Unit : mm

Part No.	HRS No.	No. of Pos.	B	C	F
FH58-21S-0.2SHW(##)	CL0580-3812-0-##	21	3.6	4.0	4.87
FH58-31S-0.2SHW(##)	CL0580-3827-0-##	31	5.6	6.0	6.87
FH58-35S-0.2SHW(##)	CL0580-3810-0-##	35	6.4	6.8	7.67
FH58-41S-0.2SHW(##)	CL0580-3801-5-##	41	7.6	8.0	8.87
FH58-51S-0.2SHW(##)	CL0580-3807-0-##	51	9.6	10.0	10.87
FH58A-61S-0.2SHW(##)	CL0580-3803-0-##	61	11.6	12.0	12.87

Aug.1.2026 Copyright 2026 HIROSE ELECTRIC CO., LTD. All Rights Reserved.

Downloaded from Arrow.com.

FH58M Series
(P=0.25mm pitch, Standard Actuator Type)

Recommended PCB Mounting Pattern

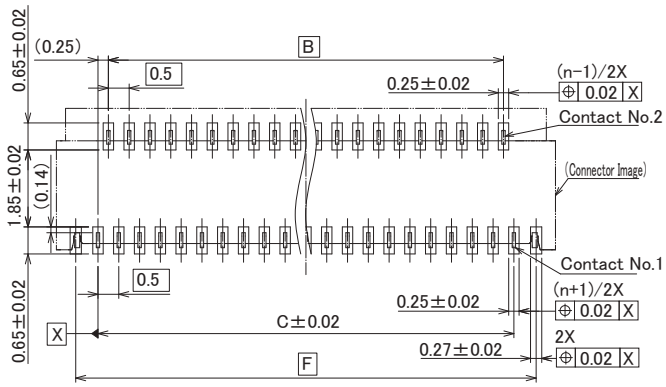

Note : 'n' indicates the number of positions.

Recommended Metal Mask Dimension

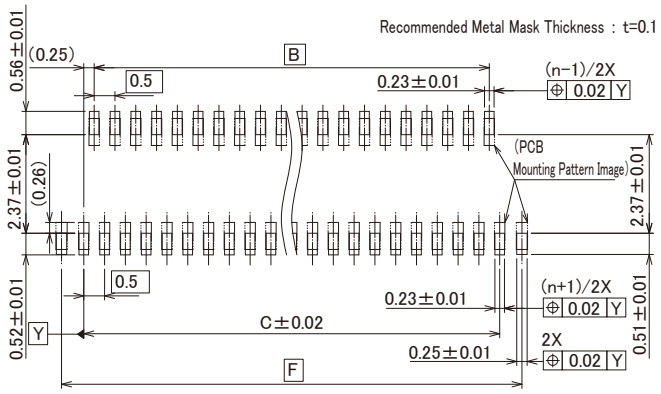

Unit : mm

Part No.	HRS No.	No. of Pos.	B	C	F
FH58M-7S-0.2SHW(##)	CL0580-3811-0-##	7	1.0	1.5	2.52

Aug.1.2026 Copyright 2026 HIROSE ELECTRIC CO., LTD. All Rights Reserved.

Downloaded from Arrow.com.

FH58S Connector Dimensions

FH58S Series
(0.2mm pitch, Housing Reinforced, Standard Actuator Type)

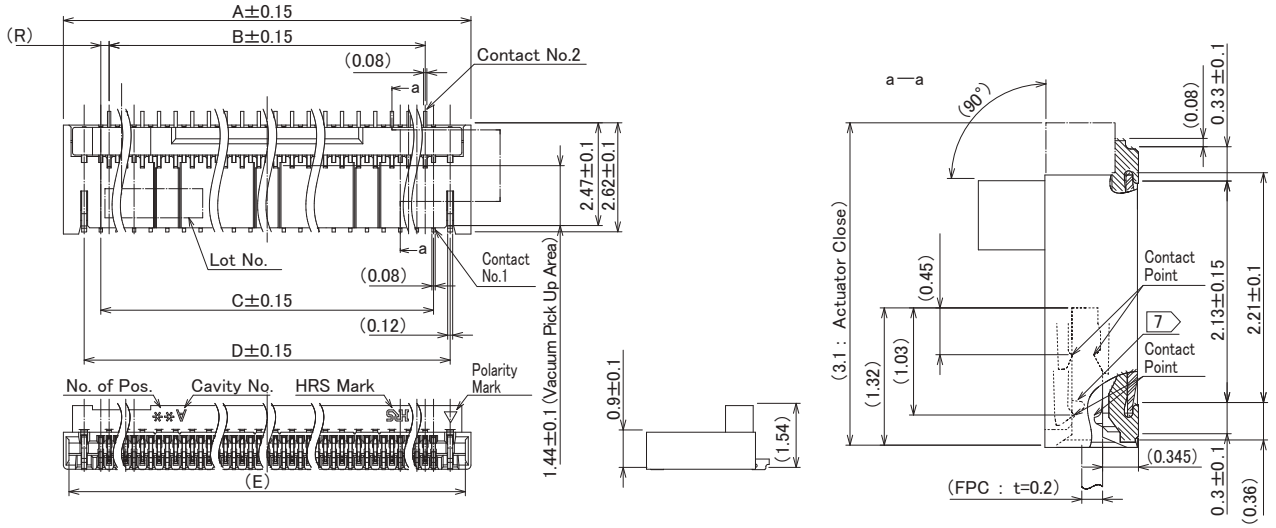

1 : The dimension in parentheses are for reference.
2 : The coplanarity of the contact and retention tab lead should be 0.1mm Max.
3 : To be delivered with tape and reel packages.
See the packaging specifications for details.
4 : Sink holes or slits could be added for improvements.
5 : Black spots may appear on the mold, however this does not represent a quality issue.
6 : This product satisfies halogen free requirements defined as 900ppm maximum chlorine, 900ppm maximum bromine, and 1500ppm maximum total of chlorine and bromine.
7 : 7 Shows hook part of the locking metal tabs.

Unit : mm

Part No.	HRS No.	No. of Pos.	A	B	C	D	E	R
FH58S-21S-0.2SHW(##)	CL0580-3830-0-##	21	6.0	3.6	4.0	4.8	5.53	0.2
FH58S-25S-0.2SHW(##)	CL0580-3828-0-##	25	6.8	4.4	4.8	5.6	6.33	
FH58S-31S-0.2SHW(##)	CL0580-3831-0-##	31	8.0	5.6	6.0	6.8	7.53	
FH58S-35S-0.2SHW(##)	CL0580-3832-0-##	35	8.8	6.4	6.8	7.6	8.33	
FH58S-41S-0.2SHW(##)	CL0580-3833-0-##	41	10.0	7.6	8.0	8.8	9.53	
FH58S-51S-0.2SHW(##)	CL0580-3834-0-##	51	12.0	9.6	10.0	10.8	11.53	

【Specification Number】
None: Standard (5,000 pcs per reel)
(99) : For Trial Production (500 pcs per reel)

Aug.1.2026 Copyright 2026 HIROSE ELECTRIC CO., LTD. All Rights Reserved.

Downloaded from Arrow.com.

FH58SA Connector Dimensions

FH58SA Series
(0.2mm pitch, Housing Reinforced, Long Actuator Type)

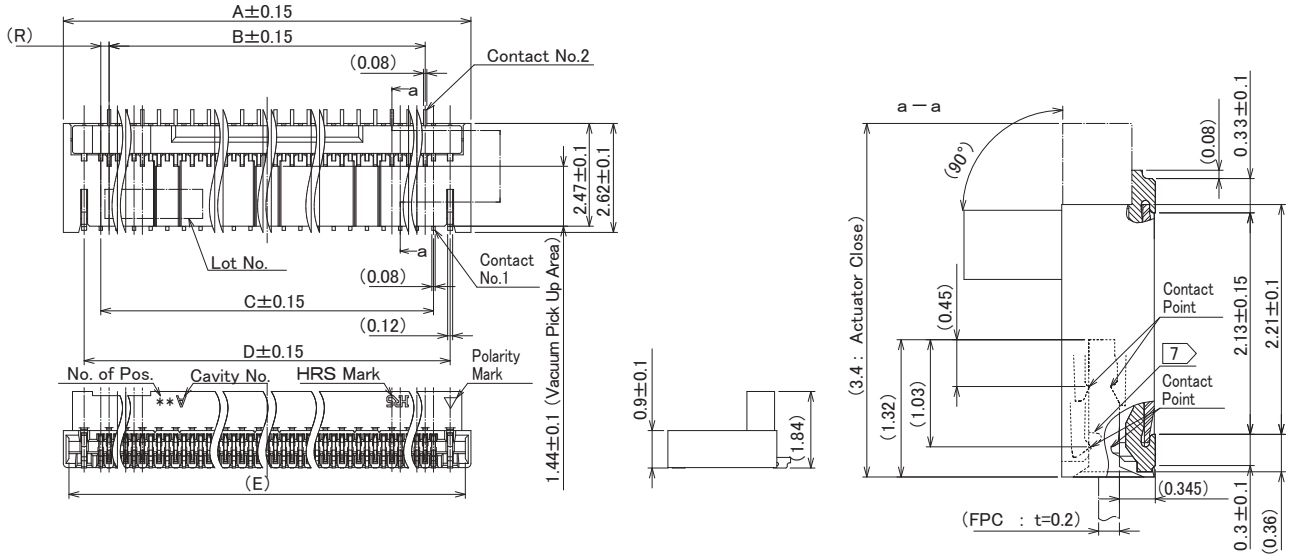

1 : The dimension in parentheses are for reference.
2 : The coplanarity of the contact and retention tab lead should be 0.1mm Max.
3 : To be delivered with tape and reel packages.
See the packaging specifications for details.
4 : Sink holes or slits could be added for improvements.
5 : Black spots may appear on the mold, however this does not represent a quality issue.
6 : This product satisfies halogen free requirements defined as 900ppm maximum chlorine, 900ppm maximum bromine, and 1500ppm maximum total of chlorine and bromine.
7 : 7 Shows hook part of the locking metal tabs.

Unit : mm

Part No.	HRS No.	No. of Pos.	A	B	C	D	E	R
FH58SA-61S-0.2SHW(##)	CL0580-3835-0-##	61	14.0	11.6	12.0	12.8	13.53	0.20
FH58SA-71S-0.2SHW(##)	CL0580-3826-0-##	71	16.0	13.6	14.0	14.8	15.53	
FH58SA-81S-0.2SHW(##)	CL0580-3825-0-##	81	18.0	15.6	16.0	16.8	17.53	

【Specification Number】
None: Standard (5,000 pcs per reel)
(99) : For Trial Production (500 pcs per reel)

Aug.1.2026 Copyright 2026 HIROSE ELECTRIC CO., LTD. All Rights Reserved.

Downloaded from Arrow.com.

Recommended PCB Mounting Pattern, Metal Mask Dimensions

FH58S(A) Series
(P=0.2mm pitch, Housing Reinforced, Standard/Long Actuator Type)

Recommended PCB Mounting Pattern

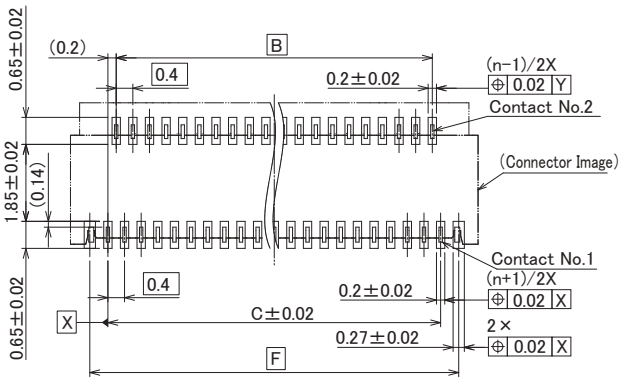

Recommended Metal Mask Dimension

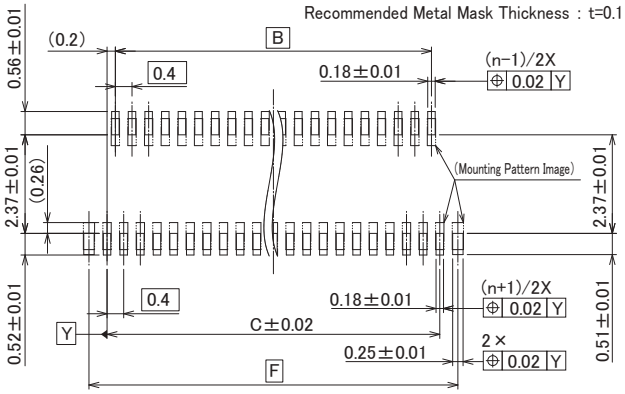

Unit : mm

Part No.	HRS No.	No. of Pos.	B	C	F
FH58S-21S-0.2SHW(##)	CL0580-3830-0-##	21	3.6	4.0	4.87
FH58S-25S-0.2SHW(##)	CL0580-3828-0-##	25	4.4	4.8	5.67
FH58S-31S-0.2SHW(##)	CL0580-3831-0-##	31	5.6	6.0	6.87
FH58S-35S-0.2SHW(##)	CL0580-3832-0-##	35	6.4	6.8	7.67
FH58S-41S-0.2SHW(##)	CL0580-3833-0-##	41	7.6	8.0	8.87
FH58S-51S-0.2SHW(##)	CL0580-3834-0-##	51	9.6	10.0	10.87
FH58SA-61S-0.2SHW(##)	CL0580-3835-0-##	61	11.6	12.0	12.87
FH58SA-71S-0.2SHW(##)	CL0580-3826-0-##	71	13.6	14.0	14.87
FH58SA-81S-0.2SHW(##)	CL0580-3825-0-##	81	15.6	16.0	16.87

Aug.1.2026 Copyright 2026 HIROSE ELECTRIC CO., LTD. All Rights Reserved.

Downloaded from Arrow.com.

Recommended FPC

FH58(A)(S)(SA) Series
(P=0.2mm pitch, Housing Reinforced, Standard/Long Actuator Type)

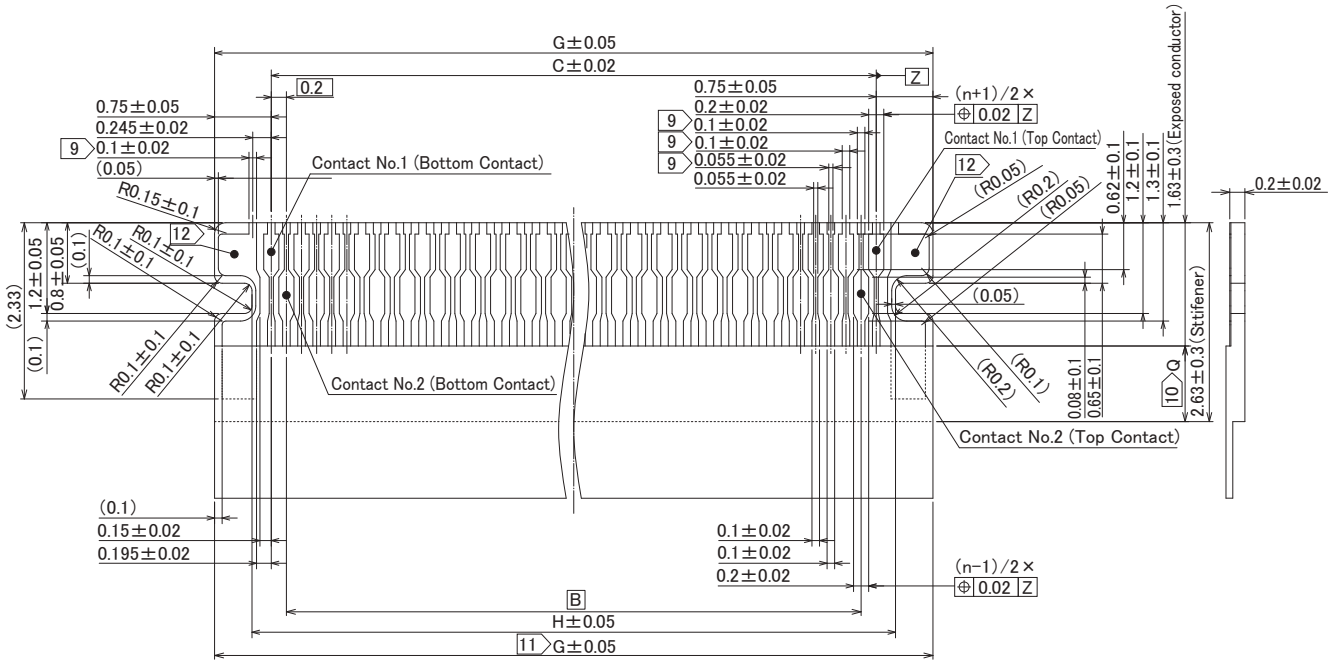

9 Shows recommended dimensions when lead for plating is required.
10 Dimension Q must be 0.5mm Min..
11 Indicated tolerance is applicable to the exposed conductor.
12 Both end sides of contact pad on FPC cannot be used for signal transmission.

FH58(A) Series
(P=0.2mm pitch, Standard/Long Actuator Type)

Unit : mm

Part No.	HRS No.	No. of Pos.	B	C	G	H
FH58-21S-0.2SHW(##)	CL0580-3812-0-##	21	3.6	4.0	5.5	4.51
FH58-31S-0.2SHW(##)	CL0580-3827-0-##	31	5.6	6.0	7.5	6.51
FH58-35S-0.2SHW(##)	CL0580-3810-0-##	35	6.4	6.8	8.3	7.31
FH58-41S-0.2SHW(##)	CL0580-3801-5-##	41	7.6	8.0	9.5	8.51
FH58-51S-0.2SHW(##)	CL0580-3807-0-##	51	9.6	10.0	11.5	10.51
FH58A-61S-0.2SHW(##)	CL0580-3803-0-##	61	11.6	12.0	13.5	12.51

Aug.1.2026 Copyright 2026 HIROSE ELECTRIC CO., LTD. All Rights Reserved.

Downloaded from Arrow.com.

FH58S(A) Series
(P=0.2mm pitch, Housing Reinforced, Standard/Long Actuator Type)

Unit : mm

Part No.	HRS No.	No. of Pos.	B	C	G	H
FH58S-21S-0.2SHW(##)	CL0580-3830-0-##	21	3.6	4.0	5.5	4.51
FH58S-25S-0.2SHW(##)	CL0580-3828-0-##	25	4.4	4.8	6.3	5.31
FH58S-31S-0.2SHW(##)	CL0580-3831-0-##	31	5.6	6.0	7.5	6.51
FH58S-35S-0.2SHW(##)	CL0580-3832-0-##	35	6.4	6.8	8.3	7.31
FH58S-41S-0.2SHW(##)	CL0580-3833-0-##	41	7.6	8.0	9.5	8.51
FH58S-51S-0.2SHW(##)	CL0580-3834-0-##	51	9.6	10.0	11.5	10.51
FH58SA-61S-0.2SHW(##)	CL0580-3835-0-##	61	11.6	12.0	13.5	12.51
FH58SA-71S-0.2SHW(##)	CL0580-3826-0-##	71	13.6	14.0	15.5	14.51
FH58SA-81S-0.2SHW(##)	CL0580-3825-0-##	81	15.6	16.0	17.5	16.51

FH58M Series
(P=0.25mm pitch, Standard Actuator Type)

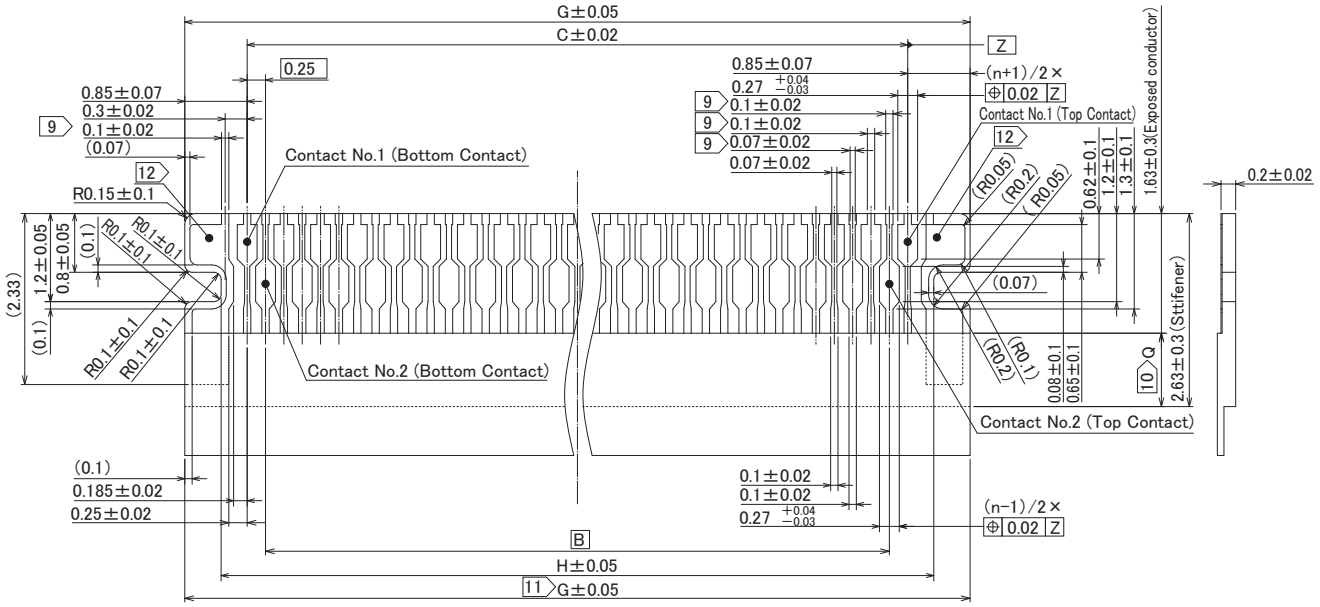

9 Shows recommended dimensions when lead for plating is required.
10 Dimension Q must be 0.5mm Min..
11 Indicated tolerance is applicable to the exposed conductor.
12 Both end sides of contact pad on FPC cannot be used for signal transmission.

Unit : mm

Part No.	HRS No.	No. of Pos.	B	C	G	H
FH58M-7S-0.2SHW(##)	CL0580-3811-0-##	7	1.0	1.5	3.20	2.21

Aug.1.2026 Copyright 2026 HIROSE ELECTRIC CO., LTD. All Rights Reserved.

Downloaded from Arrow.com.

Packaging Specifications

FH58(M) (A) Series
(0.2mm/0.25mm pitch, Standard/Long Actuator Type)

● Embossed Carrier Tape Dimensions

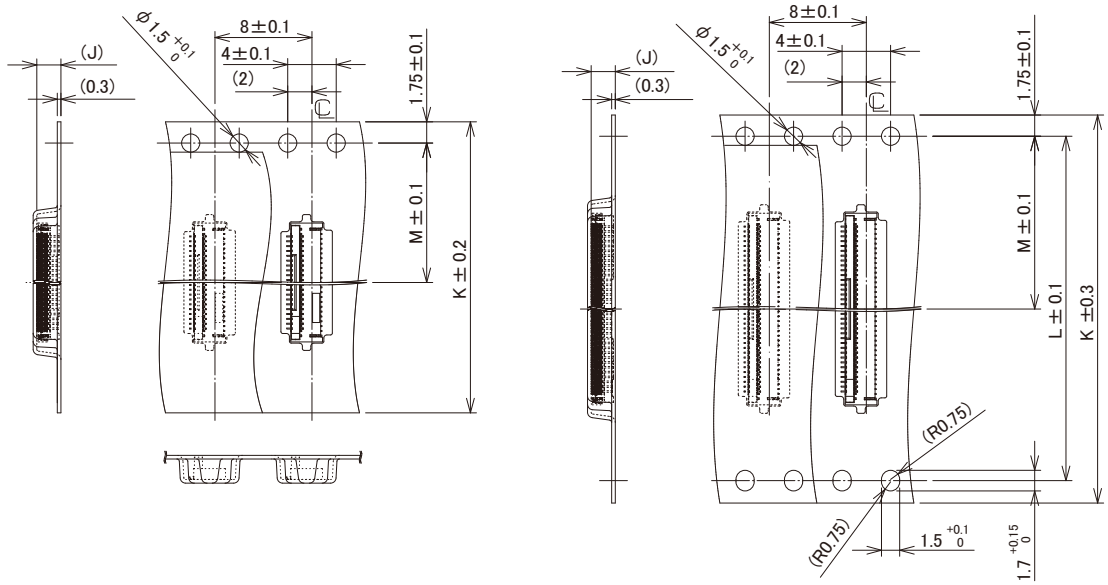

● Reel Dimensions

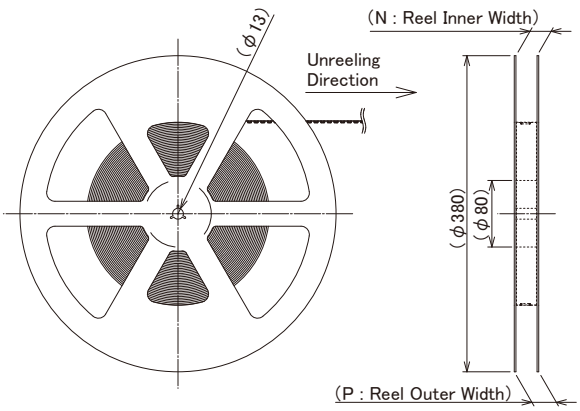

●Leader, Trailer Dimensions

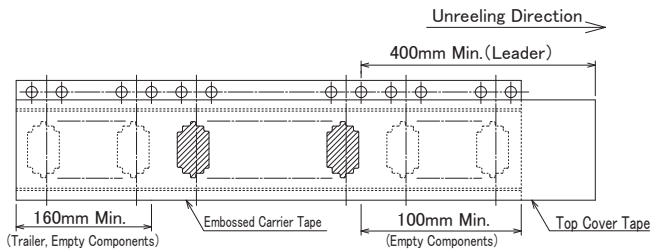

Unit : mm

Part No.	HRS No.	No. of Pos.	J	K	L	M	N	P
FH58-21S-0.2SHW(##)	CL0580-3812-0-##	21	1.69	16.0	-	7.5	17.4	21.4
FH58-31S-0.2SHW(##)	CL0580-3827-0-##	31		24.0		11.5	25.4	29.4
FH58-35S-0.2SHW(##)	CL0580-3810-0-##	35						
FH58-41S-0.2SHW(##)	CL0580-3801-5-##	41						
FH58-51S-0.2SHW(##)	CL0580-3807-0-##	51						
FH58A-61S-0.2SHW(##)	CL0580-3803-0-##	61	1.99					
FH58M-7S-0.25SHW(##)	CL0580-3811-0-##	7	1.69	16.0		7.5	17.4	21.4

Aug.1.2026 Copyright 2026 HIROSE ELECTRIC CO., LTD. All Rights Reserved.

Downloaded from Arrow.com.

FH58S(A) Series
(P=0.2mm pitch, Housing Reinforced, Standard/Long Actuator Type)

●Embossed Carrier Tape Dimensions

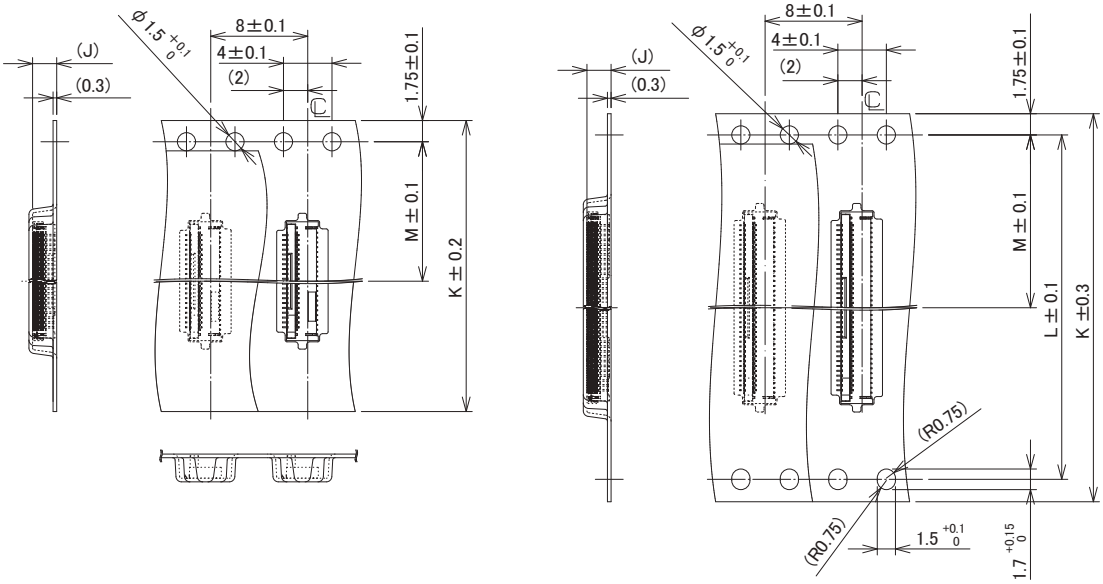

●Reel Dimensions

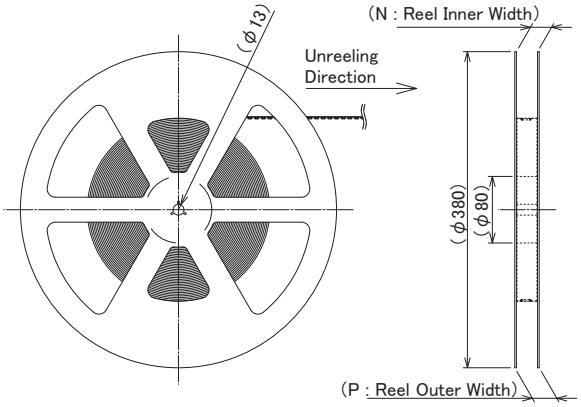

●Leader, Trailer Dimensions

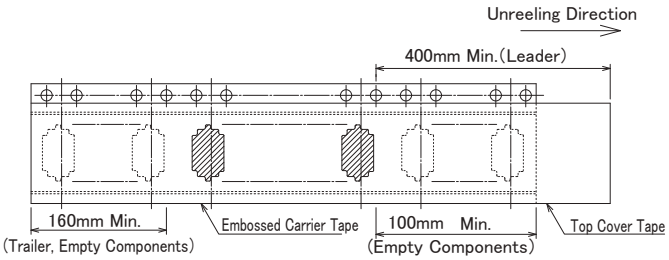

Unit : mm

Part No.	HRS No.	No. of Pos.	J	K	L	M	N	P
FH58S-21S-0.2SHW(##)	CL0580-3830-0-##	21	1.69	16.0	-	7.5	17.4	21.4
FH58S-25S-0.2SHW(##)	CL0580-3828-0-##	25						
FH58S-31S-0.2SHW(##)	CL0580-3831-0-##	31		24.0		11.5	25.4	29.4
FH58S-35S-0.2SHW(##)	CL0580-3832-0-##	35						
FH58S-41S-0.2SHW(##)	CL0580-3833-0-##	41						
FH58S-51S-0.2SHW(##)	CL0580-3834-0-##	51						
FH58SA-61S-0.2SHW(##)	CL0580-3835-0-##	61	1.99					
FH58SA-71S-0.2SHW(##)	CL0580-3826-0-##	71		32.0	28.4	14.2	334.0	37.4
FH58SA-81S-0.2SHW(##)	CL0580-3825-0-##	81						

Aug.1.2026 Copyright 2026 HIROSE ELECTRIC CO., LTD. All Rights Reserved.

Downloaded from Arrow.com.

Recommended FPC Construction

FH58(A)(S)(SA) Series

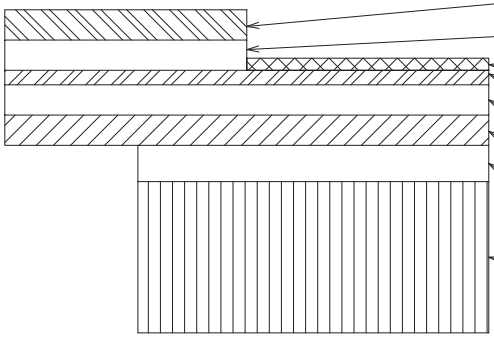

Material Name	Material	Thickness(μm)
Covering Film Layer	Polyimide 1mil	25
Covering Adhesive		25
Surface Treatment	1 to 6μm+ Nickel underplated 0.2μm Gold plated	(4)
Conductor Copper Foil	Cu 1/2 oz	18
Base Adhesive	Heat-Hardened Adhesive	Non-Adhesive Type
Base Film	Polyimide 1mil	25
Reinforcement Material Adhesive	Heat-Hardened Adhesive	30
Adhesive Stiffener	Polyimide 5mil	125

FH58M Series

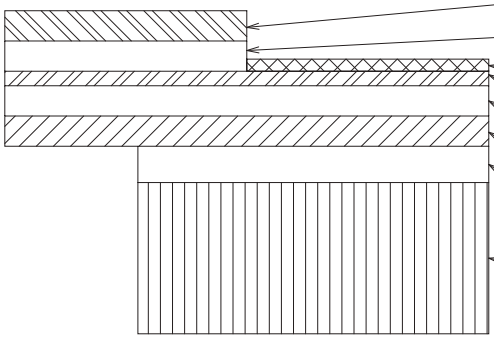

Material Name	Material	Thickness(μm)
Covering Film Layer	Polyimide 1mil	25
Covering Adhesive		25
Surface Treatment	1 to 6μm+ Nickel underplated 0.2μm Gold plated	(4)
Conductor Copper Foil	Cu 1 oz	35
Base Adhesive	Heat-Hardened Adhesive	25
Base Film	Polyimide 1mil	25
Reinforcement Material Adhesive	Heat-Hardened Adhesive	40
Adhesive Stiffener	Polyimide 3mil	75

Note 1 : This is a reference FPC construction.
Make the thickness of the FPC mated portion 0.2±0.02mm in reference to the FPC construction.
Note 2 : Contact an FPC maker for details on component construction.

Temperature Profile

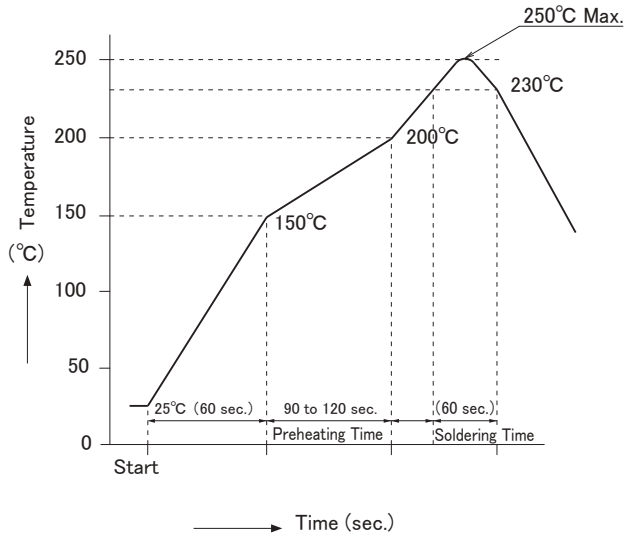

Applicable Conditions

Solder Method	Reflow, IR/Hot Air
Environment	Room Air
Solder Composition	Paste Type Sn/3.0Ag/0.5Cu (SENJU METAL INDUSTRY CO., LTD. Part No. : M705-GRN360-K2-V)
Test Board	Material and Size Glass Epoxy 32.85×18.3×1mm "Recommended PCB Mounting Pattern"
Metal Mask	Thick and Opening Dimensions "Recommended Metal Mask Dimensions"

This temperature profile is for the above conditions.
The temperature profile may vary depending on the type of cream solder, the manufacturer, the board size and other conditions such as mounting materials.
Please check the mounting status before use.

Aug.1.2026 Copyright 2026 HIROSE ELECTRIC CO., LTD. All Rights Reserved.

Downloaded from Arrow.com.

Connector Operation and Points to Note

This connector requires delicate and careful handling due to its small design.

1. Initial Condition

Actuator does not have to be operated before inserting FPC, as the connector is delivered with the actuator opened.

⚠ Caution

・Do not close the actuator before inserting FPC.
・Closing the actuator without FPC could make the contact gap smaller, which could increase the FPC insertion force.

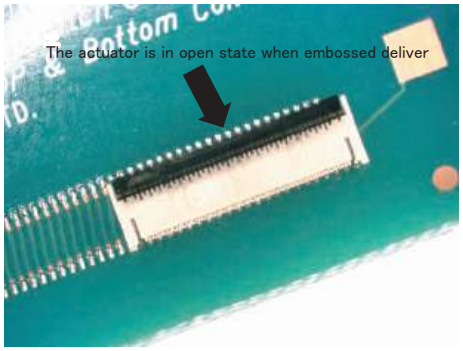

2. How to insert FPC

Keeping level with the PCB, make sure to insert the FPC all the way.

⚠ Caution

・ Insert the FPC with the actuator opened.
・During FPC insertion, do not twist the FPC to up and down, right and left or an angle. It may cause deformation of the contacts and contact failure.

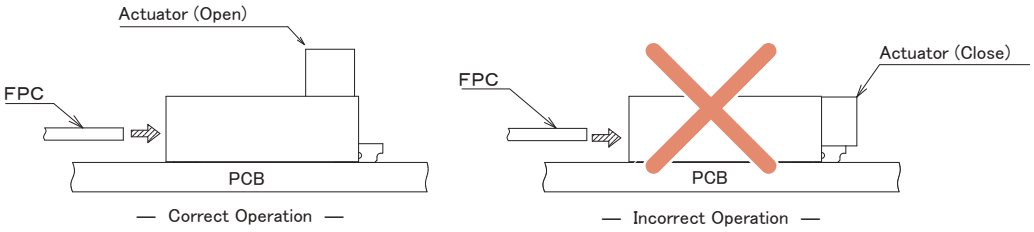

Aug.1.2026 Copyright 2026 HIROSE ELECTRIC CO., LTD. All Rights Reserved.

Downloaded from Arrow.com.

3. FPC Insertion Check

By visually comparing the positions of FPC notches, it is possible to prevent mis-insertion of diagonal or shallow insertion.

Incomplete FPC Insertion

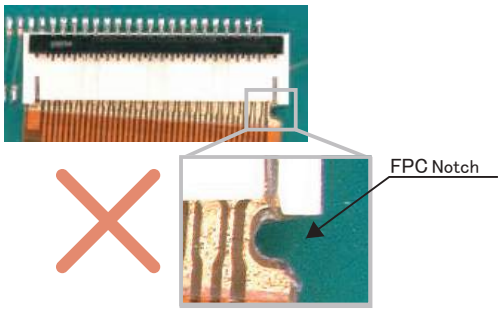

Through the FPC notch, PCB is visible.

Correct FPC Insertion

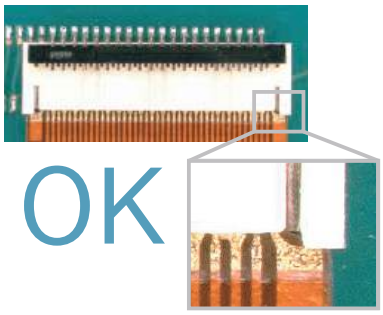

The FPC notch is hidden by the connector housing and PCB is not visible from the notch.

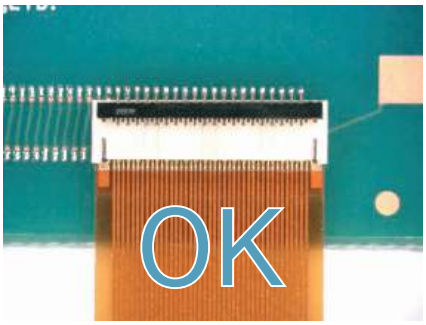

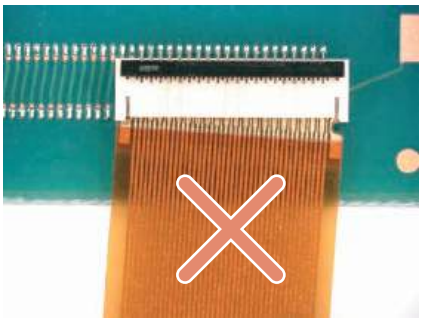

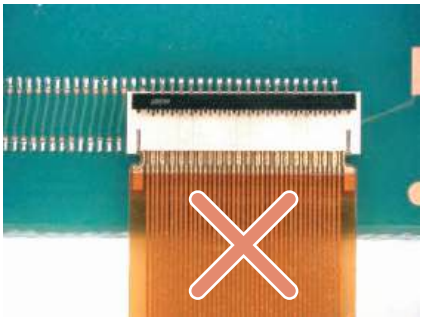

4. How to lock

Apply load to rotate the actuator by 90 degree after inserting the FPC.
During that time, rotate the middle or entire actuator with the balls of your finger tips and take it completely down.
(Do not push down on only one side of actuator. Actuator will twist and cause broken.)

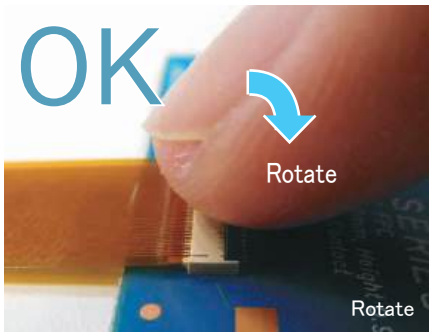

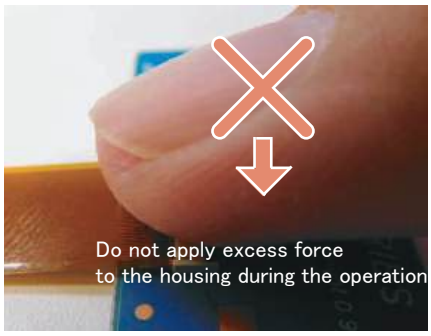

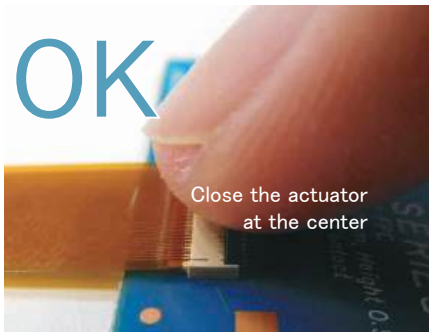

Aug.1.2026 Copyright 2026 HIROSE ELECTRIC CO., LTD. All Rights Reserved.

Downloaded from Arrow.com.

5. How to remove FPC (How to unlock FPC)

(1) Slowly flip up the actuator to release the lock. After rotating the actuator to the fully opened position carefully withdraw the FPC.
(2) To open the actuator, operate at the center of the actuator.
(Do not lift up only one side of the actuator. The actuator can be twisted causing damage.)
*The actuator is opened up to the movable limit 90 degree.
Do not open the actuator beyond the specified degree or apply excess force to the actuator.

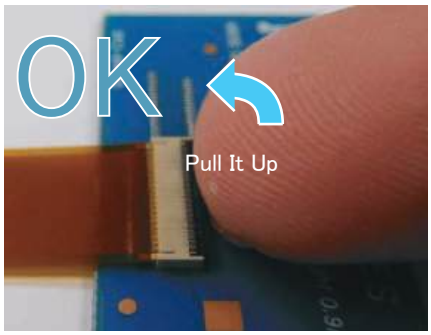

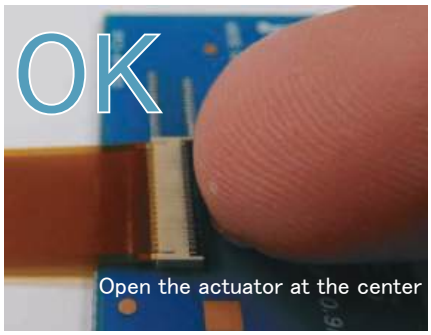

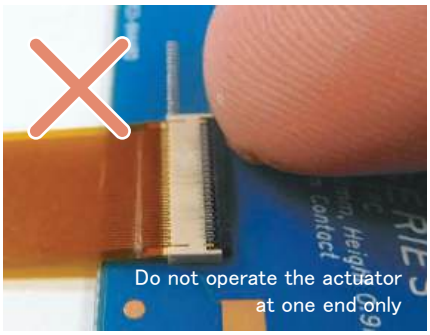

*This connector utilizes a back flip system; the actuator is placed on the side opposite of the FPC insertion opening.
Do not attempt to open the actuator from the FPC insertion side.

6. FPC routing after connection

Depending on a FPC rounding, a load is applied to connector, and a contact failure may occur.
To prevent a failure, take the following notes into a consideration during mechanism design.

⚠ Caution

- Make sure that FPC and stiffener do not contact case.
- Avoid applying forces to FPC in vertical or horizontal directions.
  In addition, avoid pulling up and down on the FPC.
- When fixing FPC after FPC cabling, avoid pulling FPC, and route the wire FPC with slack.
  In this regard, the stiffener is parallel to the PCB.
- Do not mount other components touching to the FPC underneath the FPC stiffener.

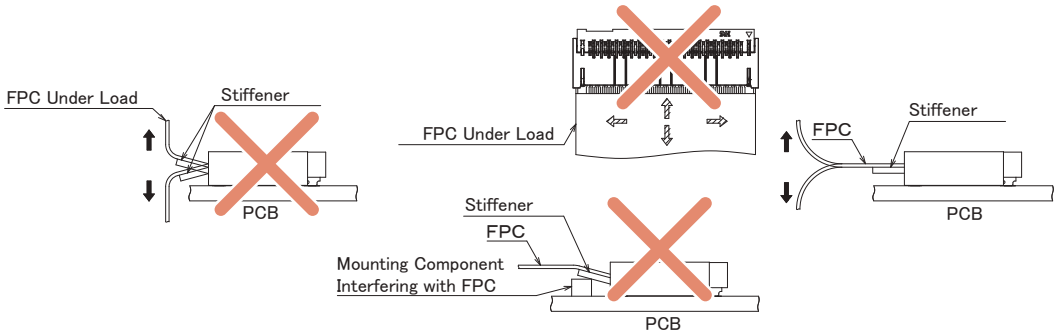

Aug.1.2026 Copyright 2026 HIROSE ELECTRIC CO., LTD. All Rights Reserved.

Downloaded from Arrow.com.

Board Mounting Notes

Warp of PCB
Minimize warp of the PCB as much as possible.
Lead co-planarity including retention tabs is 0.1mm Max.
Too much wrap of the PCB may result in a soldering failure.

Flexible Board Design
Please make sure to put a stiffener on the backside of the flexible board.
We recommend a glass epoxy material with the thickness of 0.3mm Min..

Load to Connector
Do not add 0.5N or greater external force when unreel or pick and place the connector etc, or it may get broken.
In addition, do not insert the FPC or operate the connector before mounting.

Load to PCB
・ Splitting a large PCB into several pieces
・ Screwing the PCB
Avoid the handling described above so that no force is exerted on the PCB during the assembly process. Otherwise, the connector may become defective.

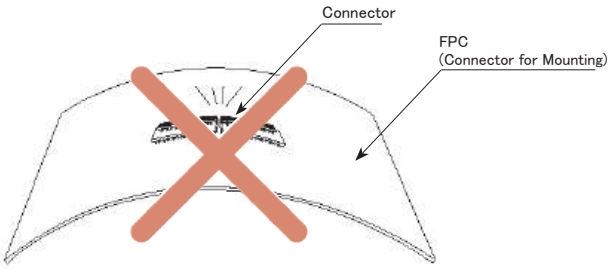

Instructions on Manual Soldering
Follow the instructions shown below when soldering the connector manually during work, etc.
(1) Do not perform reflow and manual soldering with the FPC inserted in the connector.
(2) Please be careful not to apply excessive heat, or allow the solder iron to touch any place other than the connector contact lead.
Failure to do so may result in connector deformation or melting
(3) Do not supply excessive solder (or flux).
If excessive solder (or flux) is supplied on the terminals, solder or flux may adhere to the contacts or rotating parts of the actuator, resulting in poor contact or a rotation failure of the actuator.
Supplying excessive solder to the metal locking tabs may hinder actuator rotation, resulting in breakage of the connector.

While Taking into Consideration

Specifications mentioned in this catalog are reference values.
When considering to order or use this product, please review the Drawing and Product Specifications sheets.
Use an appropriate cable when using the connector in combination with cables.
If considering usage of a non-specified cable, please contact your sales representative.
If assembly process is done by jigs & tools which are not identified by Hirose, the warranty of the product may be affected.
If considering usage for below mentioned applications, please contact your sales representative.
In cases where the application will demand a high level of reliability, such as automotive, medical instruments, public infrastructure, aerospace/defense etc. Hirose must review before assurance of reliability can be given.

Aug.1.2026 Copyright 2026 HIROSE ELECTRIC CO., LTD. All Rights Reserved.

HIROSE
HIROSE ELECTRIC CO.,LTD. 2-6-3,Nakagawa Chuoh,Tsuzuki-Ku,Yokohama-Shi 224-8540,JAPAN
https://www.hirose.com

※The contents of this catalog are current as of date of 9/2024. Contents are subject to change without notice for the purpose of improvements.
※The HRS logo and "HIROSE" are trademarks of HIROSE ELECTRIC CO., LTD.

Downloaded from Arrow.com.