FAIRCHILD™

Is Now Part of

ON

ON Semiconductor®

To learn more about ON Semiconductor, please visit our website at
www.onsemi.com

Please note: As part of the Fairchild Semiconductor integration, some of the Fairchild orderable part numbers will need to change in order to meet ON Semiconductor's system requirements. Since the ON Semiconductor product management systems do not have the ability to manage part nomenclature that utilizes an underscore (_), the underscore (_) in the Fairchild part numbers will be changed to a dash (-). This document may contain device numbers with an underscore (_). Please check the ON Semiconductor website to verify the updated device numbers. The most current and up-to-date ordering information can be found at www.onsemi.com. Please email any questions regarding the system integration to Fairchild_questions@onsemi.com.

ON Semiconductor and the ON Semiconductor logo are trademarks of Semiconductor Components Industries, LLC dba ON Semiconductor or its subsidiaries in the United States and/or other countries. ON Semiconductor owns the rights to a number of patents, trademarks, copyrights, trade secrets, and other intellectual property. A listing of ON Semiconductor's product/patent coverage may be accessed at www.onsemi.com/site/pdf/Patent-Marking.pdf. ON Semiconductor reserves the right to make changes without further notice to any products herein. ON Semiconductor makes no warranty, representation or guarantee regarding the suitability of its products for any particular purpose, nor does ON Semiconductor assume any liability arising out of the application or use of any product or circuit, and specifically disclaims any and all liability, including without limitation special, consequential or incidental damages. Buyer is responsible for its products and applications using ON Semiconductor products, including compliance with all laws, regulations and safety requirements or standards, regardless of any support or applications information provided by ON Semiconductor. "Typical" parameters which may be provided in ON Semiconductor data sheets and/or specifications can and do vary in different applications and actual performance may vary over time. All operating parameters, including "Typicals" must be validated for each customer application by customer's technical experts. ON Semiconductor does not convey any license under its patent rights nor the rights of others. ON Semiconductor products are not designed, intended, or authorized for use as a critical component in life support systems or any FDA Class 3 medical devices or medical devices with a same or similar classification in a foreign jurisdiction or any devices intended for implantation in the human body. Should Buyer purchase or use ON Semiconductor products for any such unintended or unauthorized application, Buyer shall indemnify and hold ON Semiconductor and its officers, employees, subsidiaries, affiliates, and distributors harmless against all claims, costs, damages, and expenses, and reasonable attorney fees arising out of, directly or indirectly, any claim of personal injury or death associated with such unintended or unauthorized use, even if such claim alleges that ON Semiconductor was negligent regarding the design or manufacture of the part. ON Semiconductor is an Equal Opportunity/Affirmative Action Employer. This literature is subject to all applicable copyright laws and is not for resale in any manner.

Downloaded from Arrow.com.

March 2015

FDD6680AS

30V N-Channel PowerTrench® SyncFET™

General Description

The FDD6680AS is designed to replace a single MOSFET and Schottky diode in synchronous DC:DC power supplies. This 30V MOSFET is designed to maximize power conversion efficiency, providing a low $R_{DS(ON)}$ and low gate charge. The FDD6680AS includes an integrated Schottky diode using Fairchild's monolithic SyncFET technology. The performance of the FDD6680AS as the low-side switch in a synchronous rectifier is indistinguishable from the performance of the FDD6680A in parallel with a Schottky diode.

Applications

- DC/DC converter
- Low side notebook

Features

- 55 A, 30 V $R_{DS(ON)}$ max= 10.5 mΩ @ V_{GS} = 10 V
  $R_{DS(ON)}$ max= 13.0 mΩ @ V_{GS} = 4.5 V
- Includes SyncFET Schottky body diode
- Low gate charge (21nC typical)
- High performance trench technology for extremely low $R_{DS(ON)}$
- High power and current handling capability

.

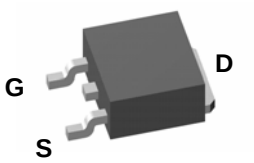

TO-252

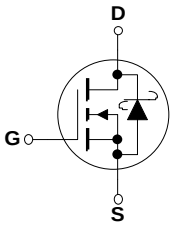

Absolute Maximum Ratings

T_A=25°C unless otherwise noted

Symbol	Parameter		Ratings	Units
V_{DSS}	Drain-Source Voltage		30	V
V_{GSS}	Gate-Source Voltage		±20	V
I_D	Drain Current – Continuous	(Note 3)	55	A
	– Pulsed	(Note 1a)	100	
P_D	Power Dissipation	(Note 1)	60	W
		(Note 1a)	3.1	
		(Note 1b)	1.3	
T_J, T_{STG}	Operating and Storage Junction Temperature Range		–55 to +150	°C

Thermal Characteristics

$R_{\theta JC}$	Thermal Resistance, Junction-to-Case	(Note 1)	2.1	°C/W
$R_{\theta JA}$	Thermal Resistance, Junction-to-Ambient	(Note 1a)	40	°C/W
$R_{\theta JA}$	Thermal Resistance, Junction-to-Ambient	(Note 1b)	96	°C/W

Package Marking and Ordering Information

Device Marking	Device	Reel Size	Tape width	Quantity
FDD6680AS	FDD6680AS	13''	16mm	2500 units

©2008 Fairchild Semiconductor Corporation

Downloaded from Arrow.com.

Electrical Characteristics

T_A = 25°C unless otherwise noted

Symbol	Parameter	Test Conditions	Min	Typ	Max	Units
Drain-Source Avalanche Ratings (Note 2)						
W_{DSS}	Drain-Source Avalanche Energy	Single Pulse, V_{DD} = 15 V, I_D=13.5A		54	205	mJ
I_{AR}	Drain-Source Avalanche Current				13.5	A
Off Characteristics						
BV_{DSS}	Drain–Source Breakdown Voltage	V_{GS} = 0 V, I_D = 1 mA	30			V
$\frac{\Delta BV_{DSS}}{\Delta T_J}$	Breakdown Voltage Temperature Coefficient	I_D = 1 mA, Referenced to 25°C		29		mV/°C
I_{DSS}	Zero Gate Voltage Drain Current	V_{DS} = 24 V, V_{GS} = 0 V			500	µA
I_{GSS}	Gate–Body Leakage	V_{GS} = ±20 V, V_{DS} = 0 V			±100	nA
On Characteristics (Note 2)						
$V_{GS(th)}$	Gate Threshold Voltage	V_{DS} = V_{GS}, I_D = 1 mA	1	1.4	3	V
$\frac{\Delta V_{GS(th)}}{\Delta T_J}$	Gate Threshold Voltage Temperature Coefficient	I_D = 1 mA, Referenced to 25°C		–3		mV/°C
$R_{DS(on)}$	Static Drain–Source On–Resistance	V_{GS} = 10 V, I_D = 12.5 A V_{GS} = 4.5 V, I_D = 10 A V_{GS}= 10 V, I_D = 12.5A, T_J= 125°C		8.6 10.3 12.5	10.5 13.0 16.0	mΩ
$I_{D(on)}$	On–State Drain Current	V_{GS} = 10 V, V_{DS} = 5 V	50			A
g_{FS}	Forward Transconductance	V_{DS} = 15 V, I_D = 12.5 A		44		S
Dynamic Characteristics						
C_{iss}	Input Capacitance	V_{DS} = 15 V, V_{GS} = 0 V, f = 1.0 MHz		1200		pF
C_{oss}	Output Capacitance			350		pF
C_{rss}	Reverse Transfer Capacitance			120		pF
R_G	Gate Resistance	V_{GS} = 15 mV, f = 1.0 MHz		1.6		Ω
Switching Characteristics (Note 2)						
$t_{d(on)}$	Turn–On Delay Time	V_{DD} = 15 V, I_D = 1 A, V_{GS} = 10 V, R_{GEN} = 6 Ω		10	20	ns
t_r	Turn–On Rise Time			6	12	ns
$t_{d(off)}$	Turn–Off Delay Time			28	45	ns
t_f	Turn–Off Fall Time			12	22	ns
$t_{d(on)}$	Turn–On Delay Time	V_{DD} = 15 V, I_D = 1 A, V_{GS} = 4.5 V, R_{GEN} = 6 Ω		14	25	ns
t_r	Turn–On Rise Time			13	23	ns
$t_{d(off)}$	Turn–Off Delay Time			20	32	ns
t_f	Turn–Off Fall Time			11	20	ns
$Q_{g(TOT)}$	Total Gate Charge at Vgs=10V	V_{DD} = 15 V, I_D = 12.5 A		21	29	nC
Q_g	Total Gate Charge at Vgs=5V			11	15	nC
Q_{gs}	Gate–Source Charge			3		nC
Q_{gd}	Gate–Drain Charge			4		nC
Drain–Source Diode Characteristics and Maximum Ratings						
I_S	Maximum Continuous Drain–Source Diode Forward Current				4.4	A
V_{SD}	Drain–Source Diode Forward Voltage	V_{GS} = 0 V, I_S = 4.4 A (Note 2) V_{GS} = 0 V, I_S = 7 A (Note 2)		0.5 0.6	0.7	V
t_{rr}	Diode Reverse Recovery Time	I_F = 12.5A, d_{iF}/d_t = 300 A/µs (Note 3)		17		nS
Q_{rr}	Diode Reverse Recovery Charge			11		nC

Downloaded from Arrow.com.

Electrical Characteristics

T_A = 25°C unless otherwise noted

Notes:

1. $R_{\theta JA}$ is the sum of the junction-to-case and case-to-ambient thermal resistance where the case thermal reference is defined as the solder mounting surface of the drain pins. $R_{\theta JC}$ is guaranteed by design while $R_{\theta CA}$ is determined by the user's board design.

a) $R_{\theta JA}$ = 40°C/W when mounted on a 1in^2 pad of 2 oz copper

b) $R_{\theta JA}$ = 96°C/W when mounted on a minimum pad.

Scale 1 : 1 on letter size paper

2. Pulse Test: Pulse Width < 300µs, Duty Cycle < 2.0%

3. Maximum current is calculated as: $\sqrt{\frac{P_D}{R_{DS(ON)}}}$

where P_D is maximum power dissipation at T_C = 25°C and $R_{DS(on)}$ is at $T_{J(max)}$ and V_{GS} = 10V. Package current limitation is 21A

Downloaded from Arrow.com.

Typical Characteristics

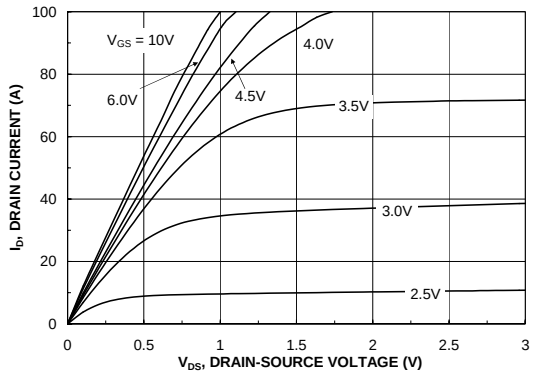

Figure 1. On-Region Characteristics.

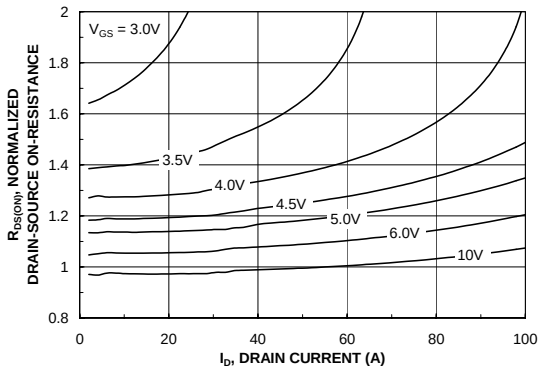

Figure 2. On-Resistance Variation with Drain Current and Gate Voltage.

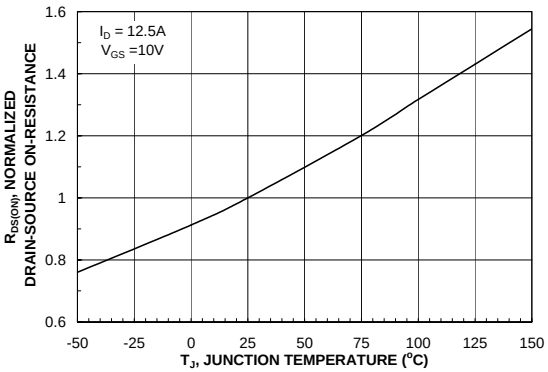

Figure 3. On-Resistance Variation with Temperature.

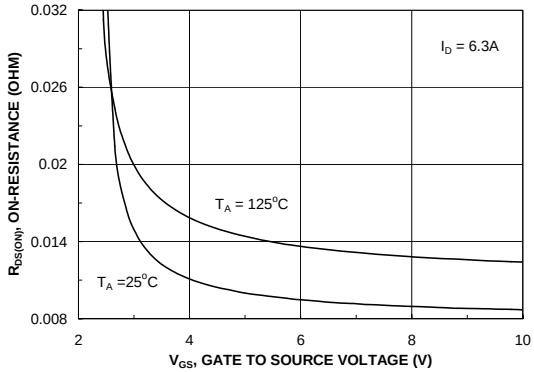

Figure 4. On-Resistance Variation with Gate-to-Source Voltage.

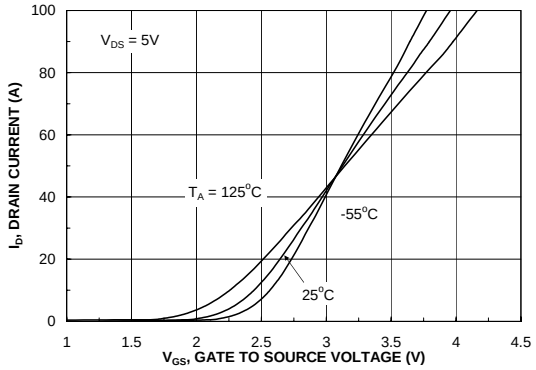

Figure 5. Transfer Characteristics.

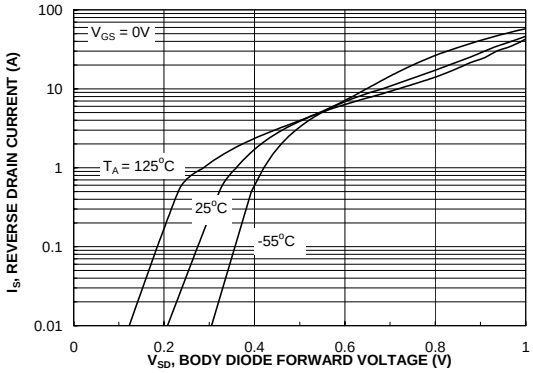

Figure 6. Body Diode Forward Voltage Variation with Source Current and Temperature.

Downloaded from Arrow.com.

Typical Characteristics (continued)

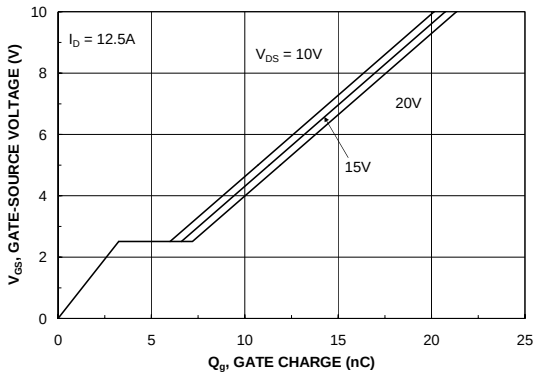

Figure 7. Gate Charge Characteristics.

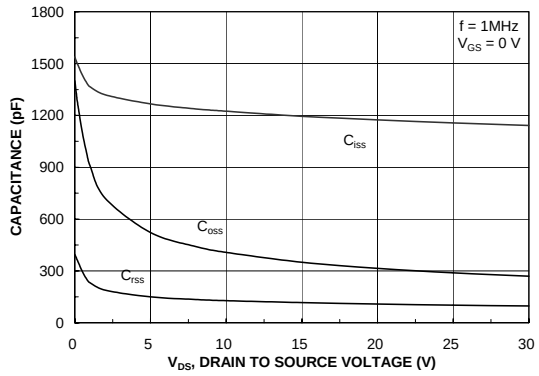

Figure 8. Capacitance Characteristics.

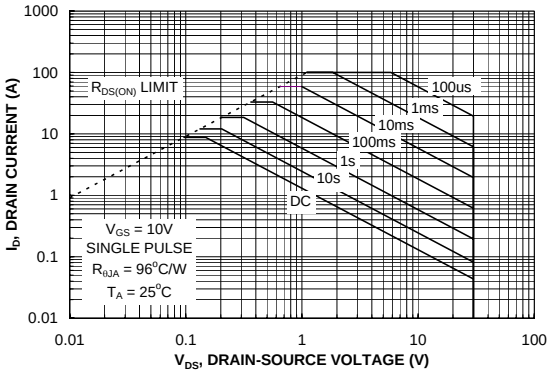

Figure 9. Maximum Safe Operating Area.

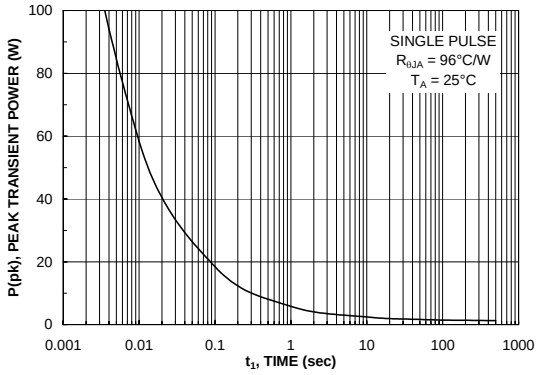

Figure 10. Single Pulse Maximum Power Dissipation.

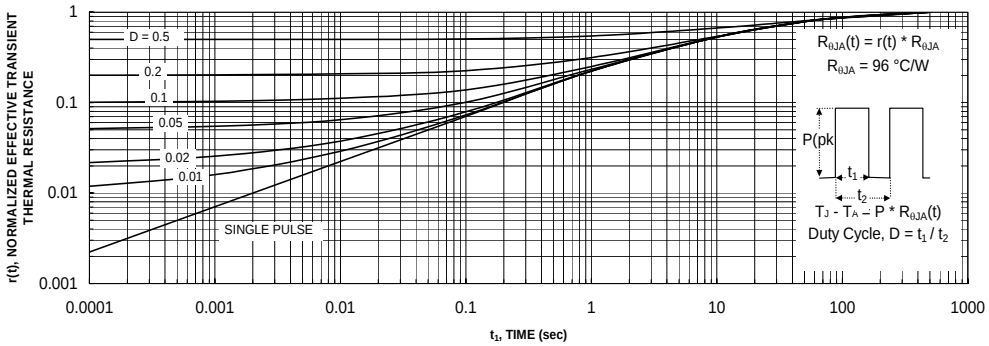

Figure 11. Transient Thermal Response Curve.

Thermal characterization performed using the conditions described in Note 1b.
Transient thermal response will change depending on the circuit board design.

Downloaded from Arrow.com.

Typical Characteristics (continued)

SyncFET Schottky Body Diode Characteristics

Fairchild's SyncFET process embeds a Schottky diode in parallel with PowerTrench MOSFET. This diode exhibits similar characteristics to a discrete external Schottky diode in parallel with a MOSFET. Figure 12 shows the reverse recovery characteristic of the FDD6680AS.

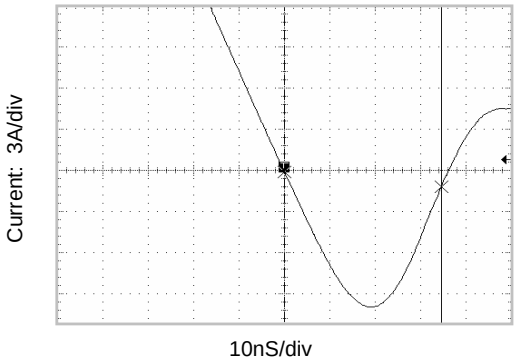

Figure 12. FDD6680AS SyncFET body diode reverse recovery characteris

For comparison purposes, Figure 13 shows the reverse recovery characteristics of the body diode of an equivalent size MOSFET produced without SyncFET (FDD6680).

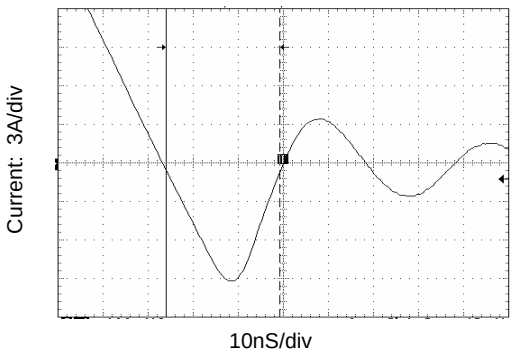

Figure 13. Non-SyncFET (FDD6680) body diode reverse recovery characteristic.

Schottky barrie diodes exhibit significant leakage at high temperature and high reverse voltage. This will increase the power in the device.

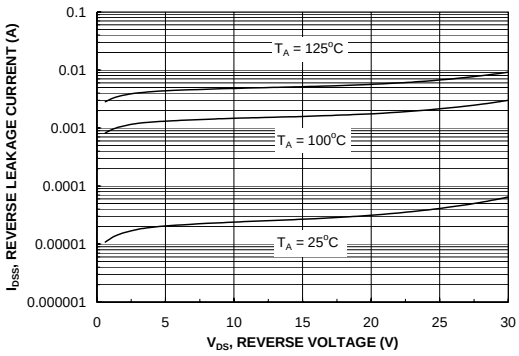

Figure 14. SyncFET body diode reverse leakage versus drain-source voltage and temperature.

Downloaded from Arrow.com.

Typical Characteristics

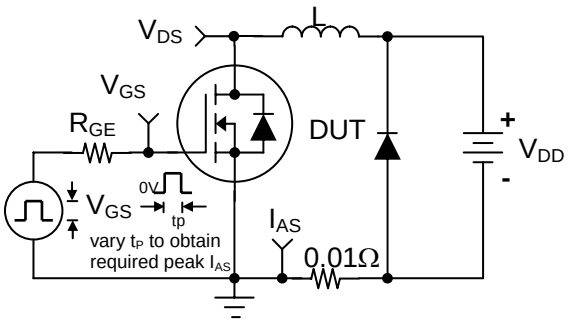

Figure 12. Unclamped Inductive Load Test Circuit

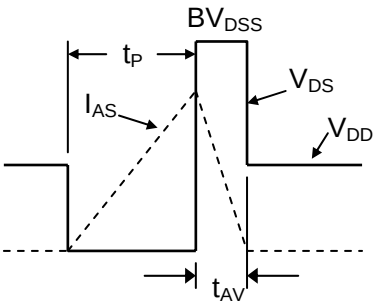

Figure 13. Unclamped Inductive Waveforms

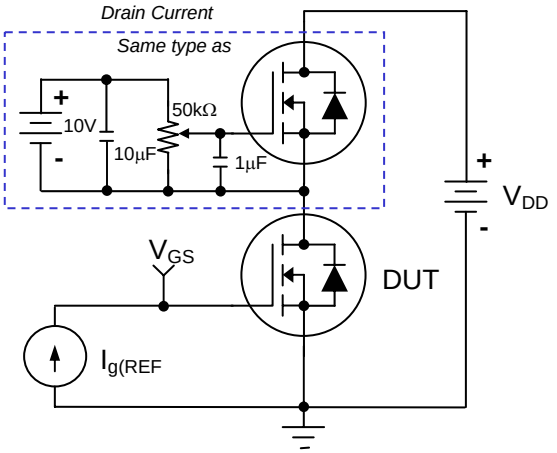

Figure 14. Gate Charge Test Circuit

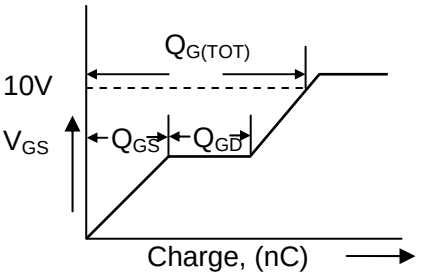

Figure 15. Gate Charge Waveform

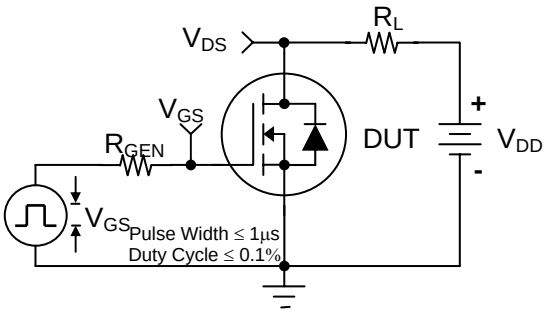

Figure 16. Switching Time Test Circuit

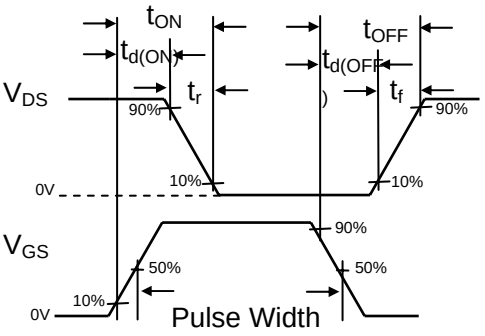

Figure 17. Switching Time Waveforms

Downloaded from Arrow.com.

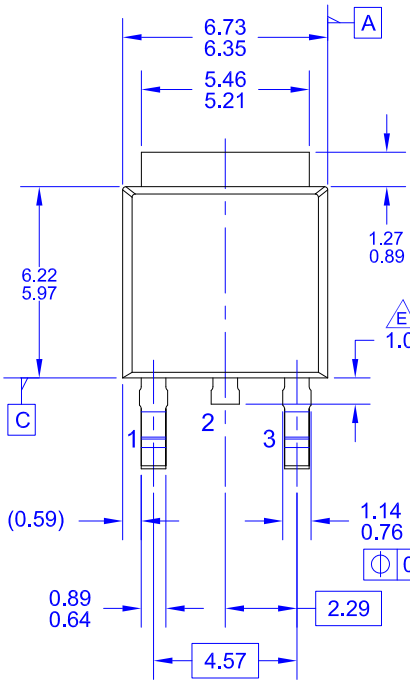

NON-DIODE
PRODUCTS VERSION

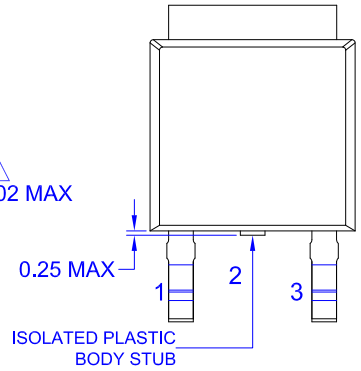

DIODE
PRODUCTS VERSION

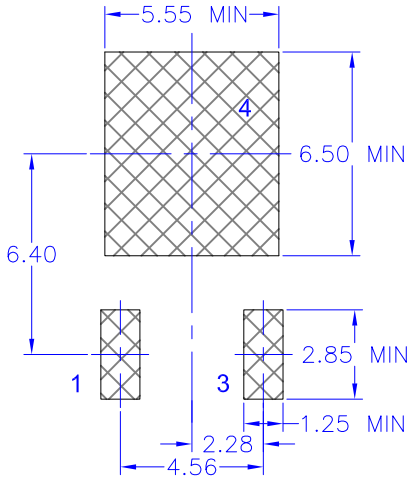

LAND PATTERN
RECOMMENDATION

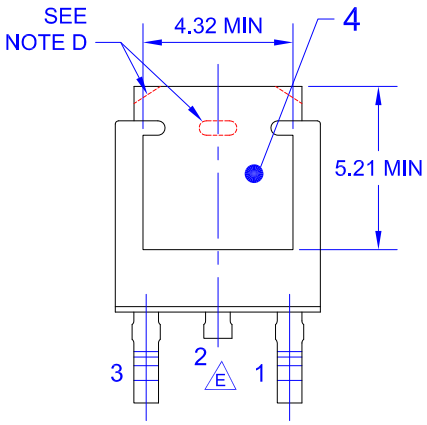

NON-DIODE
PRODUCTS VERSION

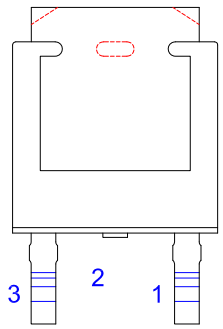

DIODE
PRODUCTS VERSION

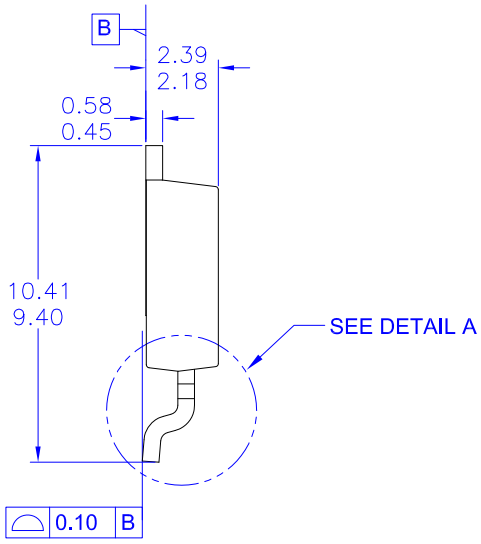

NOTES: UNLESS OTHERWISE SPECIFIED
A) THIS PACKAGE CONFORMS TO JEDEC, TO-252, ISSUE C, VARIATION AA.
B) ALL DIMENSIONS ARE IN MILLIMETERS.
C) DIMENSIONING AND TOLERANCING PER ASME Y14.5M-2009.
D) SUPPLIER DEPENDENT MOLD LOCKING HOLES OR CHAMFERED CORNERS OR EDGE PROTRUSION.
E) TRIMMED METAL CENTER LEAD IS PRESENT ON FOR NON-DIODE PRODUCTS
F) DIMENSIONS ARE EXCLUSIVE OF BURS, MOLD FLASH AND TIE BAR EXTRUSIONS.
G) LAND PATTERN RECOMMENDATION IS BASED ON IPC7351A STD TO228P991X239-3N.
H) DRAWING NUMBER AND REVISION: MKT-TO252A03REV11

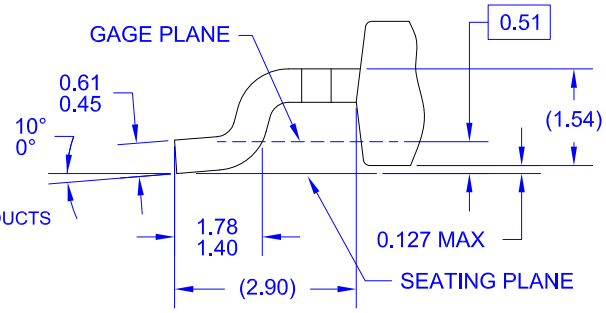

DETAIL A
(ROTATED -90°)
SCALE: 12X

Downloaded from Arrow.com.

ON Semiconductor and ON are trademarks of Semiconductor Components Industries, LLC dba ON Semiconductor or its subsidiaries in the United States and/or other countries. ON Semiconductor owns the rights to a number of patents, trademarks, copyrights, trade secrets, and other intellectual property. A listing of ON Semiconductor's product/patent coverage may be accessed at www.onsemi.com/site/pdf/Patent−Marking.pdf. ON Semiconductor reserves the right to make changes without further notice to any products herein. ON Semiconductor makes no warranty, representation or guarantee regarding the suitability of its products for any particular purpose, nor does ON Semiconductor assume any liability arising out of the application or use of any product or circuit, and specifically disclaims any and all liability, including without limitation special, consequential or incidental damages. Buyer is responsible for its products and applications using ON Semiconductor products, including compliance with all laws, regulations and safety requirements or standards, regardless of any support or applications information provided by ON Semiconductor. "Typical" parameters which may be provided in ON Semiconductor data sheets and/or specifications can and do vary in different applications and actual performance may vary over time. All operating parameters, including "Typicals" must be validated for each customer application by customer's technical experts. ON Semiconductor does not convey any license under its patent rights nor the rights of others. ON Semiconductor products are not designed, intended, or authorized for use as a critical component in life support systems or any FDA Class 3 medical devices or medical devices with a same or similar classification in a foreign jurisdiction or any devices intended for implantation in the human body. Should Buyer purchase or use ON Semiconductor products for any such unintended or unauthorized application, Buyer shall indemnify and hold ON Semiconductor and its officers, employees, subsidiaries, affiliates, and distributors harmless against all claims, costs, damages, and expenses, and reasonable attorney fees arising out of, directly or indirectly, any claim of personal injury or death associated with such unintended or unauthorized use, even if such claim alleges that ON Semiconductor was negligent regarding the design or manufacture of the part. ON Semiconductor is an Equal Opportunity/Affirmative Action Employer. This literature is subject to all applicable copyright laws and is not for resale in any manner.

PUBLICATION ORDERING INFORMATION

LITERATURE FULFILLMENT:
Literature Distribution Center for ON Semiconductor
19521 E. 32nd Pkwy, Aurora, Colorado 80011 USA
Phone: 303−675−2175 or 800−344−3860 Toll Free USA/Canada
Fax: 303−675−2176 or 800−344−3867 Toll Free USA/Canada
Email: orderlit@onsemi.com

N. American Technical Support: 800−282−9855 Toll Free USA/Canada
Europe, Middle East and Africa Technical Support:
Phone: 421 33 790 2910
Japan Customer Focus Center
Phone: 81−3−5817−1050

ON Semiconductor Website: **www.onsemi.com**

Order Literature: http://www.onsemi.com/orderlit

For additional information, please contact your local Sales Representative

Downloaded from Arrow.com.