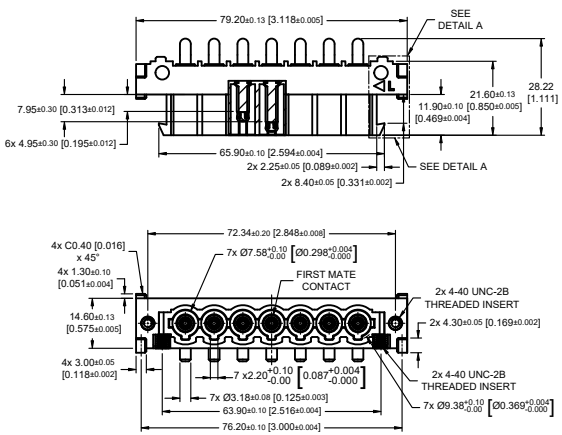



"L" INDICATE LEFT SIDE CONNECTOR.
"◁" INDICATE STARTING POINT OF CONTACT POSITION 1.

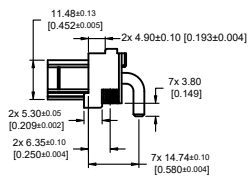

NOTES:

1) MATERIALS AND FINISHES:
   INSULATOR : GLASS-FILLED POLYESTER, UL 94V-0. COLOR: BLUE. (HALOGEN-FREE)
   POWER CONTACTS: HIGH CONDUCTIVITY COPPER ALLOY WITH GOLD FLASH OVER NICKEL PLATE.
   THREADED INSERT: COPPER ALLOY.
2) COMPLIANT TO THE CURRENT ROHS DIRECTIVE.
3) THIS MOS ALLOWS FOR THE CONNECTOR TO BE SUPPLIED WITH SPECIAL CONTACTS AND CONTACT MODULES WHICH ALLOWS FOR TOUCH SAFE FEATURE.
   THIS MOS ALSO ALLOWS FOR FIRST MATE CONTACT TO BE LOADED IN THE CENTRE CONTACT POSITION OF THE CONNECTOR.
4) RECOMMENDED WIPE LENGTH FOR 1ST MATE IS 7MM AND STANDARD MATE IS 4MM.

JH	JH		
EH	25-02-2022	NTS	Positronic
±0.05mm CAGE DISCHARGE HOLE CONTACT WITHIN MONITORS ±0.05mm CAGE DISCHARGE CONTACT TERMINATION MONITORS ±0.05mm CAGE DISCHARGE ALL OTHER MONITORS ±0.05mm CAGE DISCHARGE ALL OTHER MONITORS ±3° FOR ALL ANGLES DIMENSION ARE IN MILLIMETERS (INCHES)		SP10RSSS48RN220A1/AA-2269	SP
		MALE CONNECTOR - LEFT	
		24-02-2022	SHEET 1 OF 2	F

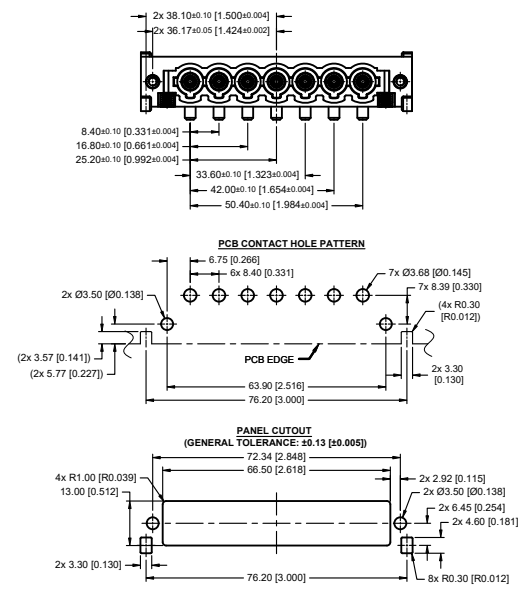

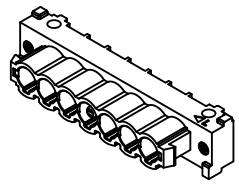

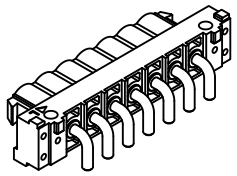

	SP10RSSS48RN220A1/AA-2269		SP
	MALE CONNECTOR - LEFT		
NTS	24-02-2022	SHEET 2 OF 2	F

Downloaded from Arrow.com.