Downloaded from Retrow.com

M 31HE102-6

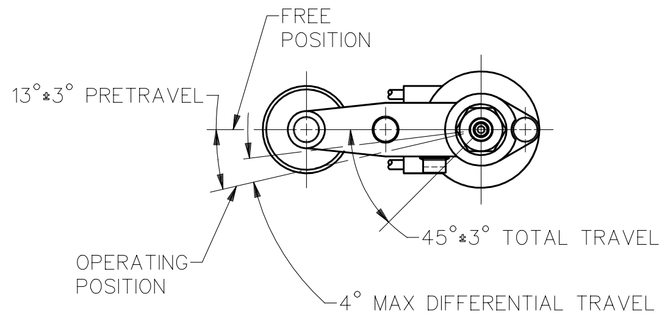

CHARACTERISTICS
SCALE: FULL

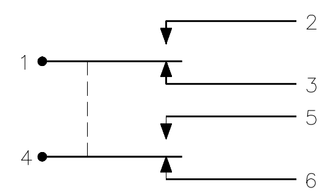

CIRCUIT DIAGRAM

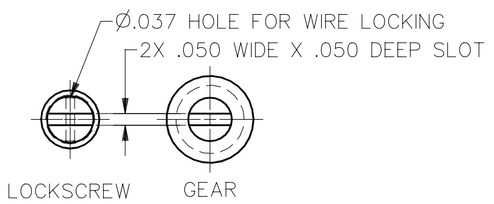

ROLLER LEVER MAY BE ADJUSTED FOR AN INFINITE NUMBER OF POSITIONS THRU 360°. ADJUSTMENT IS MADE BY LOOSENING THE LOCK NUT AND THEN THE SCREW AND TURNING GEAR UNTIL LEVER IS IN DESIRED POSITION. SCREW AND LOCK NUT ON SHAFT IS THEN TIGHTENED TO POSITIVELY LOCK LEVER IN POSITION.

LEVER ADJUSTMENT DETAIL

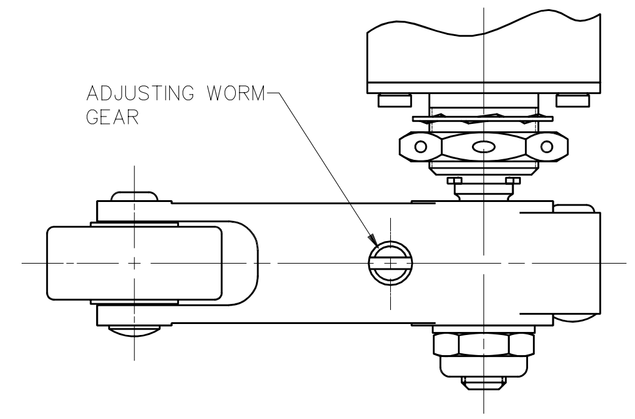

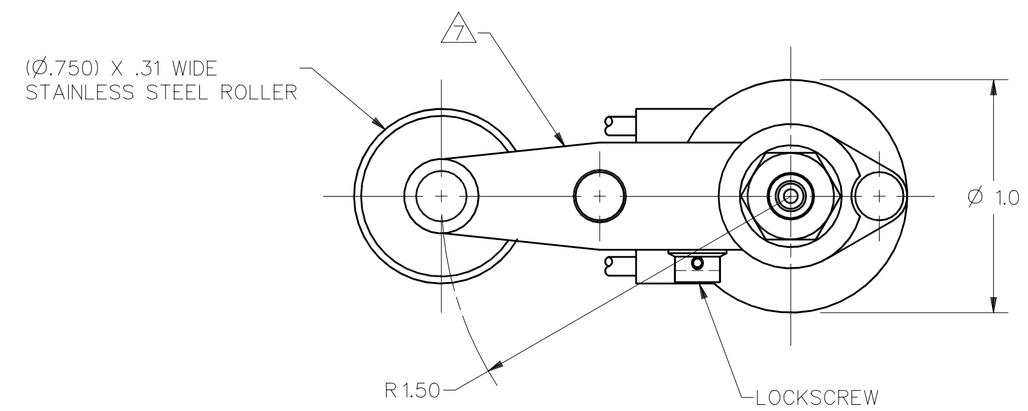

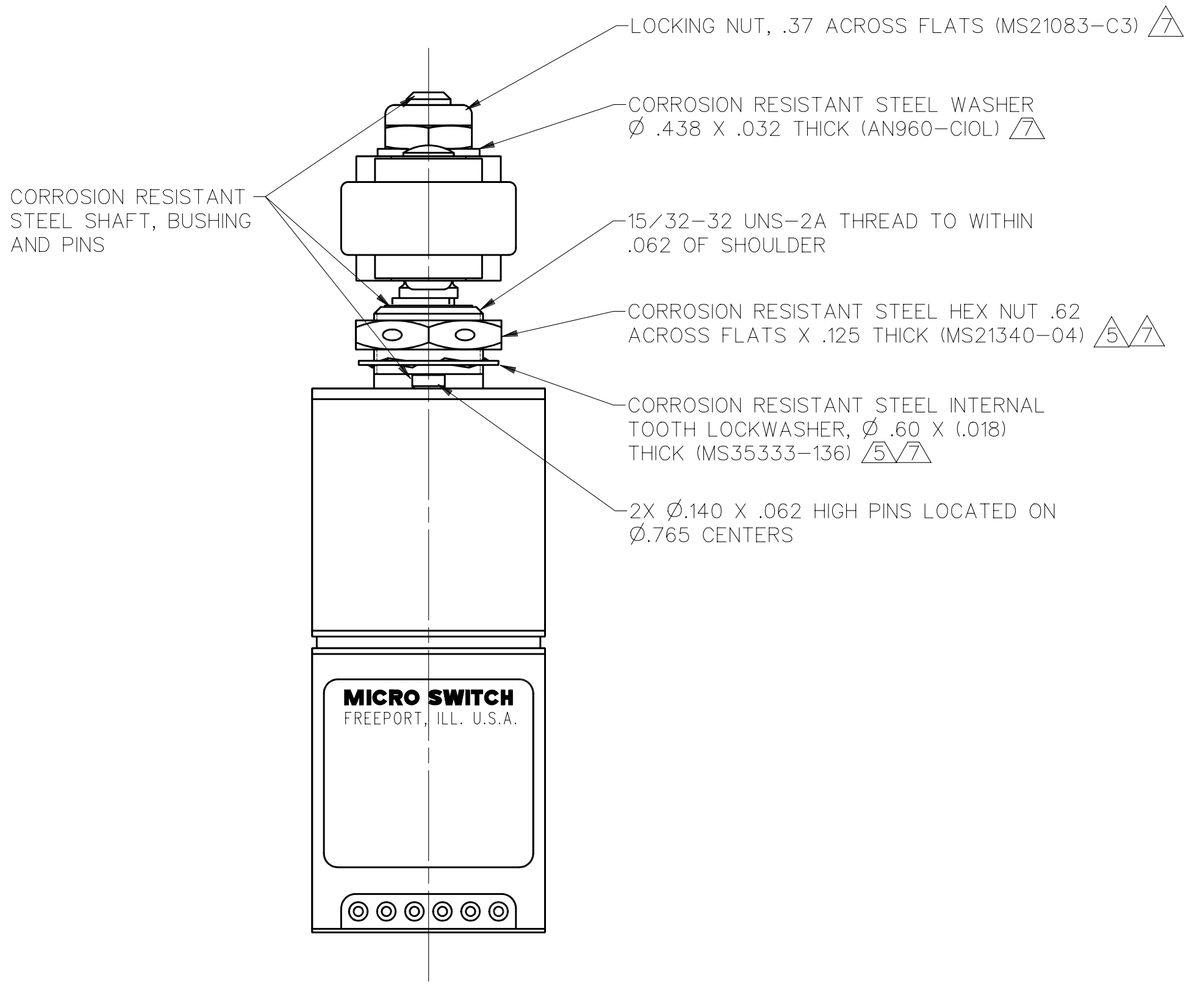

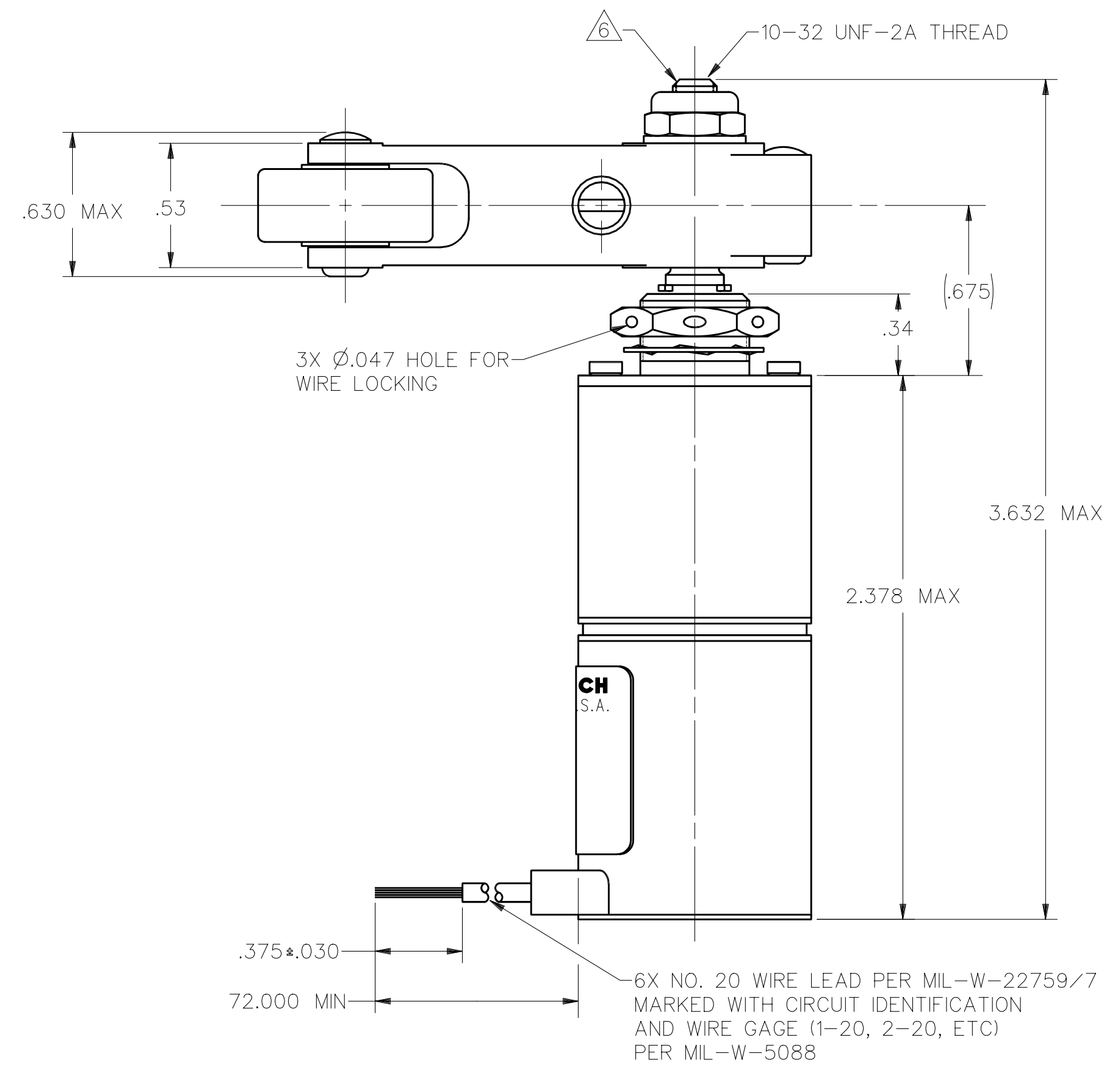

SPECIFICATION DETAILS:

STANDARD:	CONFORMS TO MS21320-2 (MIL-S-8805/48), EXCEPT AS NOTED
CONSTRUCTION:	
ENCLOSURE DESIGN	RESILIENT SEAL PER MIL-S-8805, SYMBOL 4 1
CONTACT MATERIAL & CONFIGURATION	GOLD BIFURCATED
CIRCUIT CONFIGURATION	2 SPDT
TERMINATION	LEADWIRES PER MIL-W-22759/7
WEIGHT	10 OZ MAX
EXPOSED METALS	CORROSION RESISTANT
ELECTRICAL CHARACTERISTICS:	
ELECTRICAL RATINGS -SEA LEVEL -50,000 FEET	VOLTAGE / RESISTIVE / LOAD INDUCTIVE 28 VDC / .5A / .25A 28 VDC / .5A / .25A
DIELECTRIC STRENGTH & INSULATION RESISTANCE -BETWEEN TERMINALS AND EXPOSED NON-CURRENT CARRYING METAL -BETWEEN TEMRINALS OF MUTUALLY INSULATED CIRCUITS -BETWEEN ALL UNCONNECTED TERMINALS OF THE SAME POLE	DIELECTRIC STRENGTH (≈60 Hz. FOR 5 SECONDS) / INSULATION RESISTANCE (500 VDC ± 10%) 1000 V Rms, 500μ A (MAX. LEAKAGE) / 1000 Meghoms MIN " / " " / "
SWITCH RESISTANCE	N/A
RECOMMENDATION FOR USE IN APPLICATIONS LESS THAN .5 amps AND/OR 12 volts	YES 10
MECHANICAL CHARACTERISTICS:	
CHARACTERISTICS: OPERATING TORQUE RELEASE TORQUE FULL OVERTRAVEL TORQUE PRETRAVEL FREE POSITION OVERTRAVEL	 12-25 IN-LBS 9 IN-LBS MIN 40 IN-LBS MAX SEE DETAIL
MOUNTING STRENGTH	15 IN-LBS
ACTUATOR STRENGTH	10 LBS APPLIES IN A DIRECTION TO CAUSE SWITCH ACTUATION
LIFE:	
MECHANICAL LIFE	25,000 MIN. PER MIL-S-8805/48 11
ELECTRICAL LIFE AT FULL RATED LOAD	25,000 MIN. PER MIL-S-8805/48 11
ENVIRONMENTAL:	
TEMPERATURE RANGE	-55 C TO +85 C
ALTITUDE RANGE	SEA LEVEL TO 50,000 FEET
SHOCK	PER MIL-S-8805 SYMBOL M - 100 g
VIBRATION	PER MIL-S-8805 SYMBOL 1 - 10-500 Hz. & 10 g peak
MOISTURE RESISTANCE	PER MIL-S-8805 PARA 3.20
THERMAL SHOCK	PER MIL-S-8805 PARA 3.16
SALT SPRAY	PER MIL-S-8805 PARA 3.22

NOTES
1. INTERNAL SWITCHES SEALED PER MIL-S-8805 SYMBOL 5
2 - CIRCUIT DIAGRAM AND CATALOG LISTING ARE SHOWN ON NAMEPLATE
3 - CORROSION RESISTANT STEEL ENCLOSURE
4 - TOTAL TRAVEL OF ROLLER LEVER IS 45°±3° IN COUNTERCLOCKWISE DIRECTION ONLY WITH SPRING RETURN TO NEUTRAL
5. REPLACEMENT MOUNTING HARDWARE - PACKET 19PA10
6. DO NOT APPLY MORE THAN 20-25 INCH POUNDS OF TORQUE WHEN TIGHTENING LOCKING NUT
7. HARDWARE MAY BE PACKAGED UNASSEMBLED PER MIL-S-8805
8 - BASIC SWITCHES HAVE GOLD BIFURCATED CONTACTS
9 - RETURN TORSION SPRING MATERIAL 17-7 PH SST
10. CONTACT HONEYWELL-MICRO SWITCH IF ADDITIONAL INFORMATION ON LOW ENERGY LOADS IS REQUIRED OR FOR HELP WITH SPECIFIC APPLICATIONS
11. LIFE RATINGS ARE PER MIL-S-8805 REQUIREMENTS. ACTUAL LIFE EXCEEDS RATED LIFE. CONTACT HONEYWELL-MICRO SWITCH FOR ADDITIONAL DATA

DRAWING NUMBER 31HE102-6 | PAGE 1 OF 1 | RELEASE NO. PR-18018 | REPLACES | ISSUE 6 | M

REVISIONS
A CO 82467 MAM 20 DEC 95

DRAWN M A M 20 DEC 95 | CHECK T S M 21 DEC 95 | CHECK | CHECK | CHECK | DDM/CAD

THIS DRAWING COVERS A PROPRIETARY ITEM AND IS THE PROPERTY OF MICRO SWITCH, A DIVISION OF HONEYWELL. THIS DRAWING IS NOT TO BE COPIED OR USED WITHOUT THE APPROVAL OF MICRO SWITCH.

FED. MFG. CODE 91929
MICRO SWITCH a Honeywell Division
SWITCH - ENCLOSED
CATALOG LISTING 31HE102-6

MASTER REDUCED
ANSI Y14.5M-1982 APPLIES

THIRD ANGLE PROJECTION
SCALE 2:1
DO NOT SCALE PRINT

UNLESS OTHERWISE SPECIFIED TOLERANCES ARE

ONE PLACE	(.0)	±.030
TWO PLACES	(.00)	±.015
THREE PLACES	(.000)	±.005
ANGLES		±

WEIGHT 10 OZ MAX