MOSFET – Power, N-Channel, SUPERFET® III, Easy Drive

650 V, 12 A, 260 mΩ

FCB260N65S3

V_{DSS}	$R_{DS(ON)}$ MAX	I_D MAX
650 V	260 mΩ @ 10 V	12 A

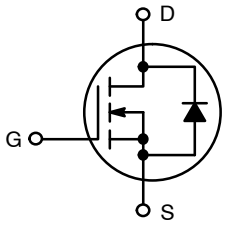

POWER MOSFET

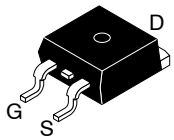

D²–PAK
CASE 418AJ

Description

SUPERFET III MOSFET is **onsemi**'s brand–new high voltage super–junction (SJ) MOSFET family that is utilizing charge balance technology for outstanding low on–resistance and lower gate charge performance. This advance technology is tailored to minimize conduction loss, provide superior switching performance, and withstand extreme dv/dt rate. Consequently, SUPERFET III MOSFET is very suitable for various power system miniaturization and higher efficiency.

Features

- 700 V @ T_J = 150°C
- Typ. $R_{DS(on)}$ = 222 mΩ
- Ultra Low Gate Charge (Typ. Q_g = 24 nC)
- Low Effective Output Capacitance (Typ. $C_{oss(eff.)}$ = 248 pF)
- 100% Avalanche Tested
- These Devices are Pb–Free and are RoHS Compliant

Applications

- Telecom / Server Power Supplies
- Industrial Power Supplies
- UPS / Solar

MARKING DIAGRAM

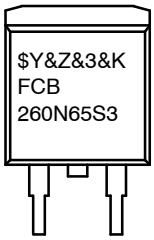

$Y	= **onsemi** Logo
&Z	= Assembly Plant Code
&3	= Data Code (Year & Week)
&K	= Lot
FCB260N65S3	= Specific Device Code

ORDERING INFORMATION

See detailed ordering and shipping information on page 2 of this data sheet.

© Semiconductor Components Industries, LLC, 2017

Downloaded from Arrow.com.

ABSOLUTE MAXIMUM RATINGS (T_C = 25°C, Unless otherwise specified)

Symbol	Parameter		Value	Unit
V_{DSS}	Drain to Source Voltage		650	V
V_{GSS}	Gate to Source Voltage	DC	±30	V
		AC (f > 1 Hz)	±30	V
I_D	Drain Current	Continuous (T_C = 25°C)	12	A
		Continuous (T_C = 100°C)	7.6	
I_{DM}	Drain Current	Pulsed (Note 1)	30	A
E_{AS}	Single Pulsed Avalanche Energy (Note 2)		57	mJ
I_{AS}	Avalanche Current (Note 1)		2.3	A
E_{AR}	Repetitive Avalanche Energy (Note 1)		0.9	mJ
dv/dt	MOSFET dv/dt		100	V/ns
	Peak Diode Recovery dv/dt (Note 3)		20	
P_D	Power Dissipation	(T_C = 25°C)	90	W
		Derate Above 25°C	0.72	W/°C
T_J, T_{STG}	Operating and Storage Temperature Range		−55 to +150	°C
T_L	Maximum Lead Temperature for Soldering, 1/8″ from Case for 5 s		300	°C

Stresses exceeding those listed in the Maximum Ratings table may damage the device. If any of these limits are exceeded, device functionality should not be assumed, damage may occur and reliability may be affected.

1. Repetitive rating: pulse-width limited by maximum junction temperature.
2. I_{AS} = 2.3 A, R_G = 25 Ω, starting T_J = 25°C.
3. I_{SD} ≤ 6 A, di/dt ≤ 200 A/μs, V_{DD} ≤ 400 V, starting T_J = 25°C.

THERMAL CHARACTERISTICS

Symbol	Parameter	Value	Unit
$R_{\theta JC}$	Thermal Resistance, Junction to Case, Max.	1.39	°C/W
$R_{\theta JA}$	Thermal Resistance, Junction to Ambient, Max. (Note 4)	40	

4. Device on 1 in^2 pad 2 oz copper pad on 1.5 x 1.5 in. board of FR−4 material.

PACKAGE MARKING AND ORDERING INFORMATION

Part Number	Top Marking	Package	Reel Size	Tape Width	Shipping†
FCB260N65S3	FCB260N65S3	D^2−PAK	330 mm	24 mm	800 / Tape & Reel

†For information on tape and reel specifications, including part orientation and tape sizes, please refer to our Tape and Reel Packaging Specifications Brochure, BRD8011/D.

Share Feedback
Your Opinion Matters

Downloaded from Arrow.com.

ELECTRICAL CHARACTERISTICS (T_C = 25°C unless otherwise noted)

Symbol	Parameter	Test Conditions	Min	Typ	Max	Unit
OFF CHARACTERISTICS						
BV_{DSS}	Drain to Source Breakdown Voltage	V_{GS} = 0 V, I_D = 1 mA, T_J = 25°C	650			V
		V_{GS} = 0 V, I_D = 1 mA, T_J = 150°C	700			V
$\Delta BV_{DSS}/\Delta T_J$	Breakdown Voltage Temperature Coefficient	I_D = 1 mA, Referenced to 25°C		0.66		V/°C
I_{DSS}	Zero Gate Voltage Drain Current	V_{DS} = 650 V, V_{GS} = 0 V			1	μA
		V_{DS} = 520 V, T_C = 125°C		0.77		
I_{GSS}	Gate to Body Leakage Current	V_{GS} = ±30 V, V_{DS} = 0 V			±100	nA
ON CHARACTERISTICS						
$V_{GS(th)}$	Gate Threshold Voltage	V_{GS} = V_{DS}, I_D = 0.29 mA	2.5		4.5	V
$R_{DS(on)}$	Static Drain to Source On Resistance	V_{GS} = 10 V, I_D = 6 A		222	260	mΩ
g_{FS}	Forward Transconductance	V_{DS} = 20 V, I_D = 6 A		7.4		S
DYNAMIC CHARACTERISTICS						
C_{iss}	Input Capacitance	V_{DS} = 400 V, V_{GS} = 0 V, f = 1 MHz		1010		pF
C_{oss}	Output Capacitance			25		pF
$C_{oss(eff.)}$	Effective Output Capacitance	V_{DS} = 0 V to 400 V, V_{GS} = 0 V		248		pF
$C_{oss(er.)}$	Energy Related Output Capacitance	V_{DS} = 0 V to 400 V, V_{GS} = 0 V		33		pF
$Q_{g(tot)}$	Total Gate Charge at 10 V	V_{DS} = 400 V, I_D = 6 A, V_{GS} = 10 V (Note 5)		24		nC
Q_{gs}	Gate to Source Gate Charge			6.1		nC
Q_{gd}	Gate to Drain “Miller” Charge			9.7		nC
ESR	Equivalent Series Resistance	f = 1 MHz		8.7		Ω
SWITCHING CHARACTERISTICS						
$t_{d(on)}$	Turn-On Delay Time	V_{DD} = 400 V, I_D = 6 A, V_{GS} = 10 V, R_g = 4.7 Ω (Note 5)		18		ns
t_r	Turn-On Rise Time			18		ns
$t_{d(off)}$	Turn-Off Delay Time			49		ns
t_f	Turn-Off Fall Time			12		ns
SOURCE-DRAIN DIODE CHARACTERISTICS						
I_S	Maximum Continuous Source to Drain Diode Forward Current				12	A
I_{SM}	Maximum Pulsed Source to Drain Diode Forward Current				30	A
V_{SD}	Source to Drain Diode Forward Voltage	V_{GS} = 0 V, I_{SD} = 6 A			1.2	V
t_{rr}	Reverse Recovery Time	V_{DD} = 400 V, I_{SD} = 6 A, dI_F/dt = 100 A/μs		251		ns
Q_{rr}	Reverse Recovery Charge			3.4		μC

Product parametric performance is indicated in the Electrical Characteristics for the listed test conditions, unless otherwise noted. Product performance may not be indicated by the Electrical Characteristics if operated under different conditions.

5. Essentially independent of operating temperature typical characteristics.

Share Feedback
Your Opinion Matters

Downloaded from Arrow.com.

TYPICAL PERFORMANCE CHARACTERISTICS

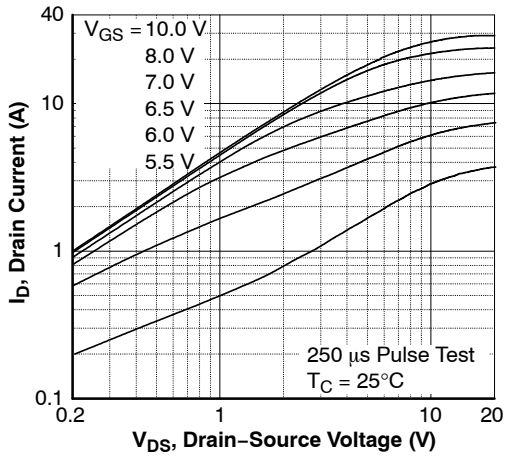

Figure 1. On−Region Characteristics

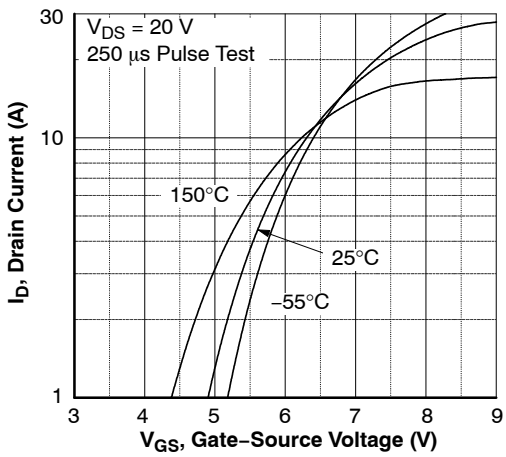

Figure 2. Transfer Characteristics

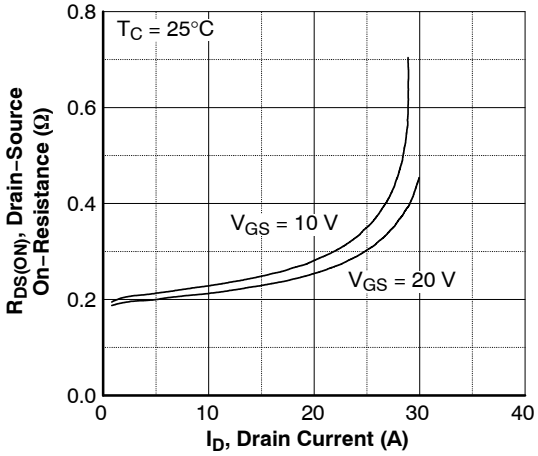

Figure 3. On−Resistance Variation vs. Drain Current and Gate Voltage

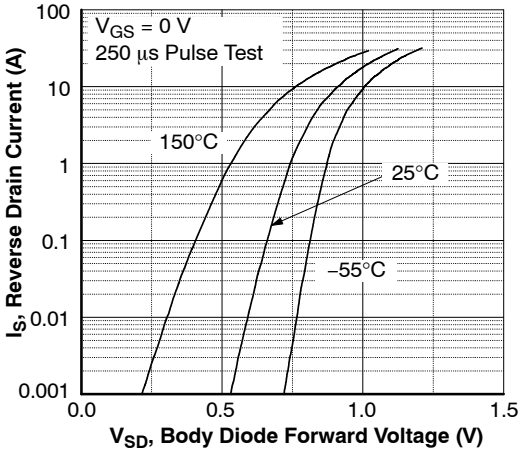

Figure 4. Body Diode Forward Voltage Variation vs. Source Current and Temperature

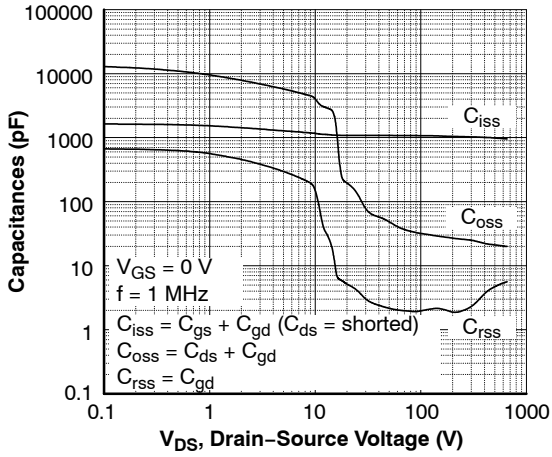

Figure 5. Capacitance Characteristics

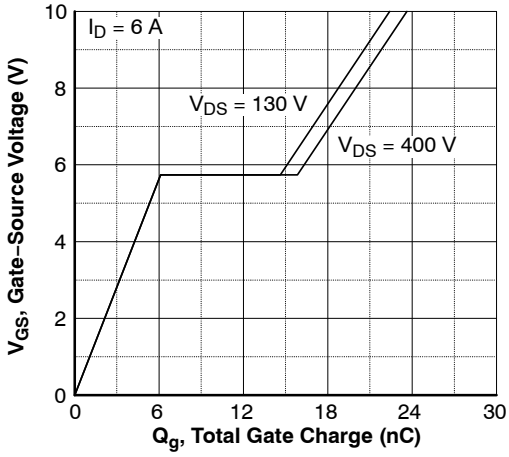

Figure 6. Gate Charge Characteristics

Share Feedback
Your Opinion Matters

Downloaded from Arrow.com.

TYPICAL PERFORMANCE CHARACTERISTICS (Continued)

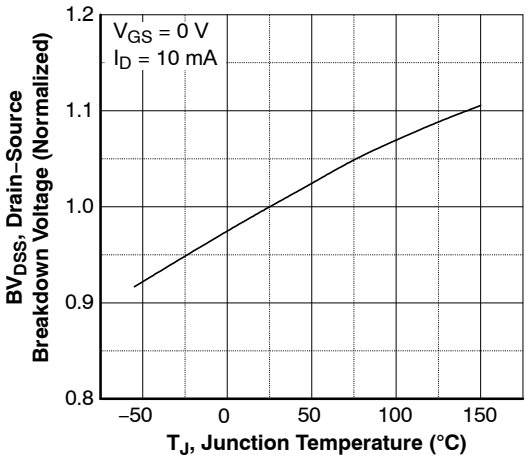

Figure 7. Breakdown Voltage Variation vs. Temperature

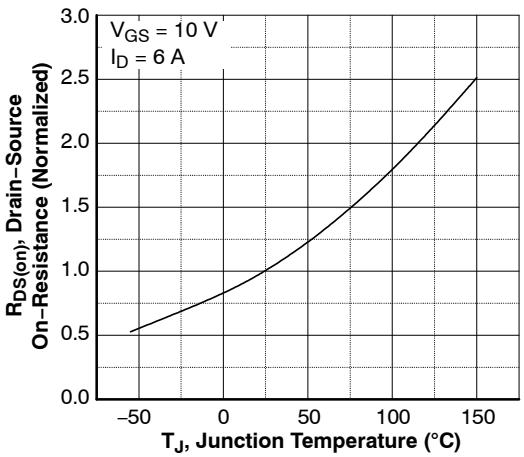

Figure 8. On−Resistance Variation vs. Temperature

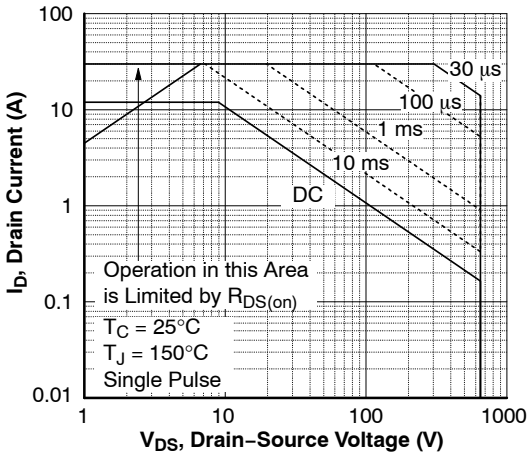

Figure 9. Maximum Safe Operating Area

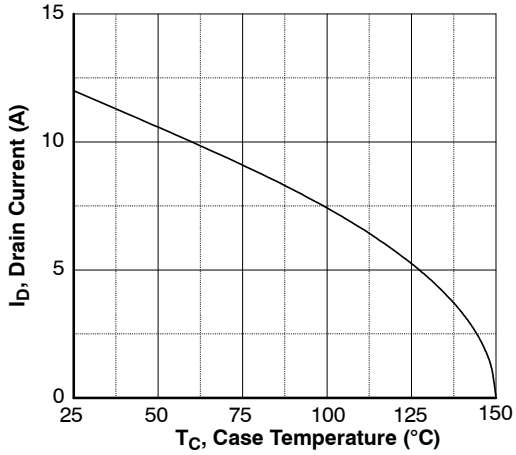

Figure 10. Maximum Drain Current vs. Case Temperature

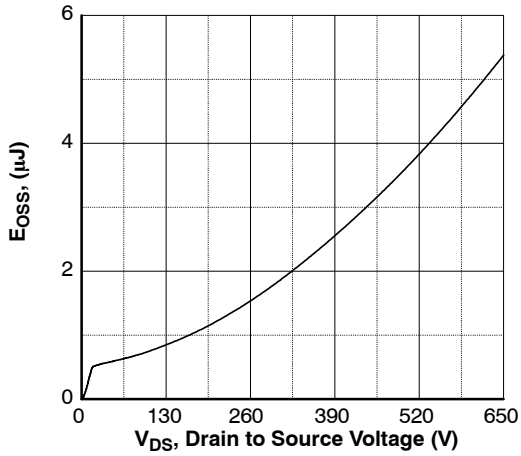

Figure 11. E_{OSS} vs. Drain to Source Voltage

Share Feedback
Your Opinion Matters

Downloaded from Arrow.com.

TYPICAL PERFORMANCE CHARACTERISTICS (Continued)

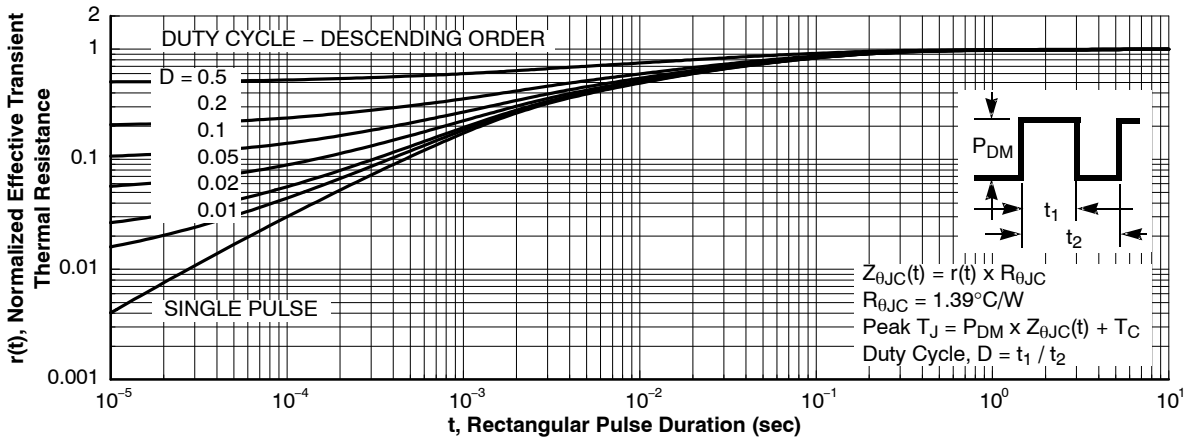

Figure 12. Transient Thermal Response Curve

Share Feedback
Your Opinion Matters

Downloaded from Arrow.com.

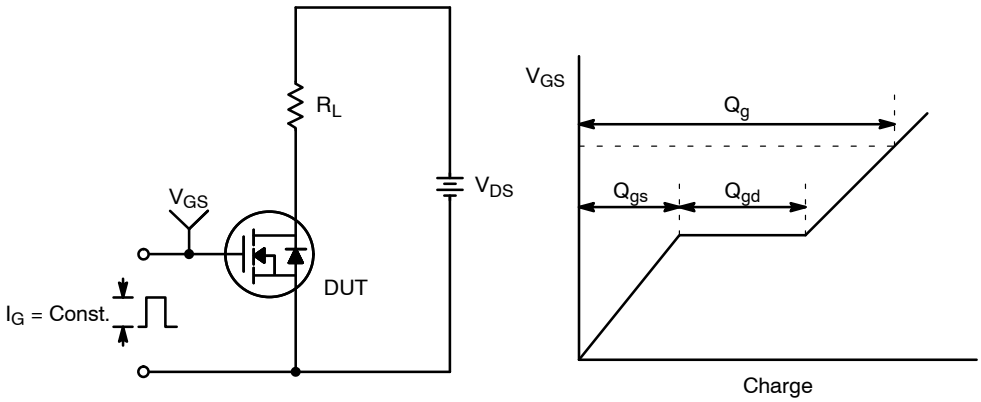

Figure 13. Gate Charge Test Circuit & Waveform

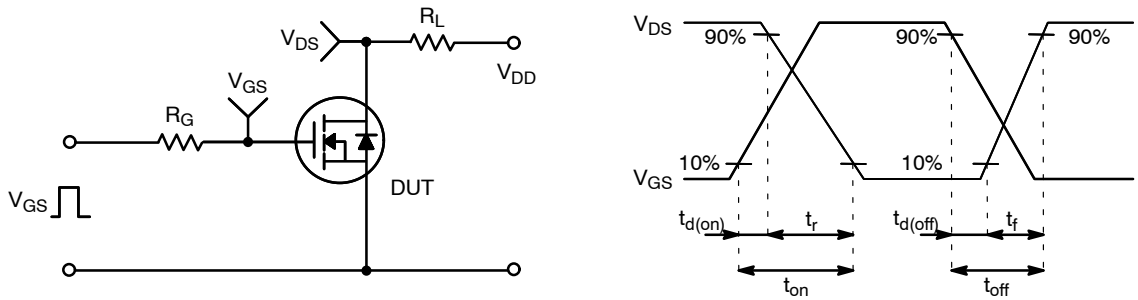

Figure 14. Resistive Switching Test Circuit & Waveforms

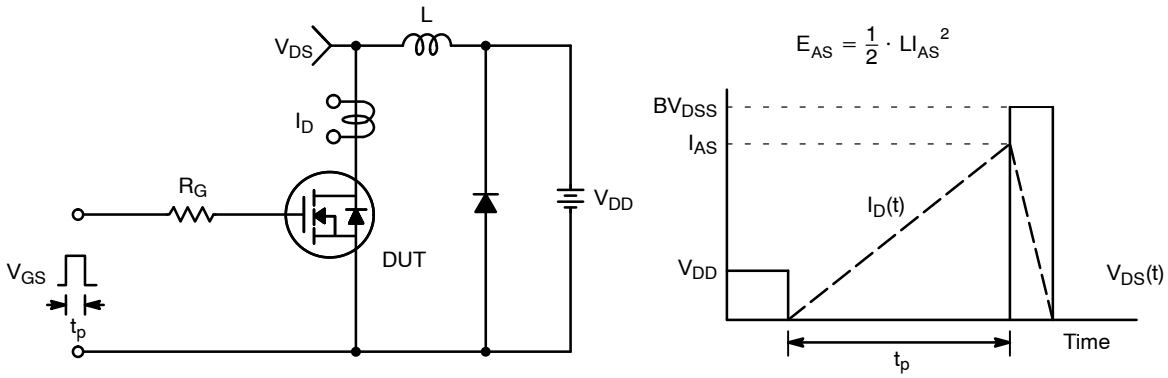

Figure 15. Unclamped Inductive Switching Test Circuit & Waveforms

Share Feedback
Your Opinion Matters

Downloaded from Arrow.com.

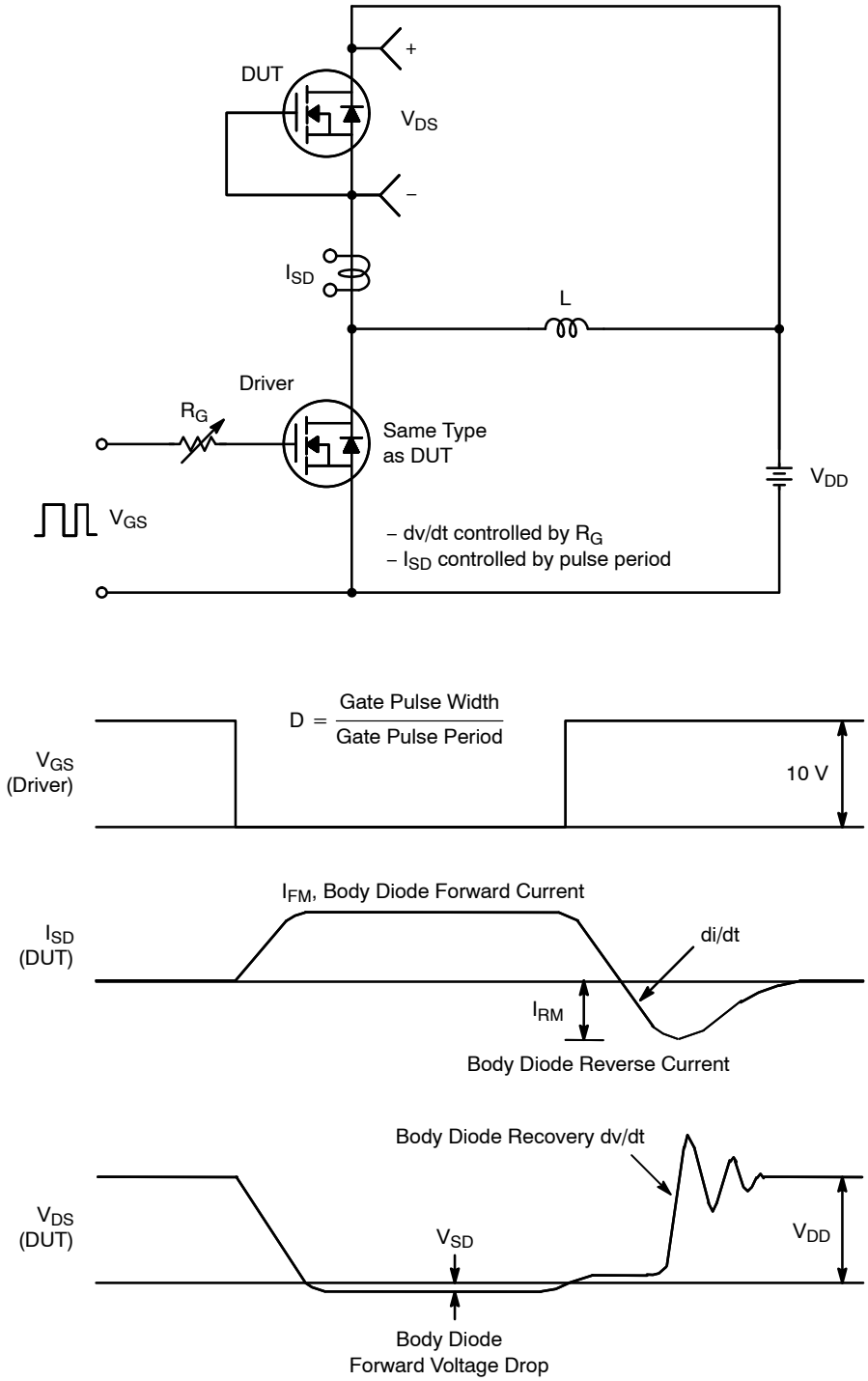

Figure 16. Peak Diode Recovery dv/dt Test Circuit & Waveforms

SUPERFET is a registered trademark of Semiconductor Components Industries, LLC dba “**onsemi**” or its affiliates and/or subsidiaries in the United States and/or other countries.

Share Feedback
Your Opinion Matters

Downloaded from Arrow.com.

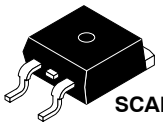

SCALE 1:1

D²PAK–3 (TO–263, 3–LEAD)
CASE 418AJ
ISSUE F

DATE 11 MAR 2021

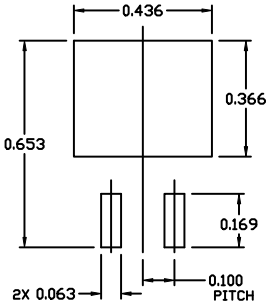

RECOMMENDED
MOUNTING FOOTPRINT

* For additional information on our Pb–Free strategy and soldering details, please download the ON Semiconductor Soldering and Mounting Techniques Reference Manual, SOLDERRM/D.

NOTES:

1. DIMENSIONING AND TOLERANCING PER ASME Y14.5M, 2009.
2. CONTROLLING DIMENSION: INCHES
3. CHAMFER OPTIONAL.
4. DIMENSIONS D AND E DO NOT INCLUDE MOLD FLASH. MOLD FLASH SHALL NOT EXCEED 0.005 PER SIDE. THESE DIMENSIONS ARE MEASURED AT THE OUTERMOST EXTREMES OF THE PLASTIC BODY AT DATUM H.
5. THERMAL PAD CONTOUR IS OPTIONAL WITHIN DIMENSIONS E, L1, D1, AND E1.
6. OPTIONAL MOLD FEATURE.
7. ①, ② ... OPTIONAL CONSTRUCTION FEATURE CALL OUTS.

DIM	INCHES MIN.	INCHES MAX.	MILLIMETERS MIN.	MILLIMETERS MAX.
A	0.160	0.190	4.06	4.83
A1	0.000	0.010	0.00	0.25
b	0.020	0.039	0.51	0.99
c	0.012	0.029	0.30	0.74
c2	0.045	0.065	1.14	1.65
D	0.330	0.380	8.38	9.65
D1	0.260	---	6.60	---
E	0.380	0.420	9.65	10.67
E1	0.245	---	6.22	---
e	0.100 BSC		2.54 BSC	
H	0.575	0.625	14.60	15.88
L	0.070	0.110	1.78	2.79
L1	---	0.066	---	1.68
L2	---	0.070	---	1.78
L3	0.010 BSC		0.25 BSC	
M	0°	8°	0°	8°

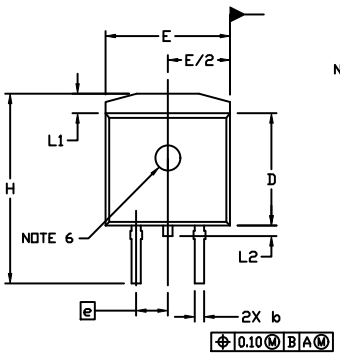

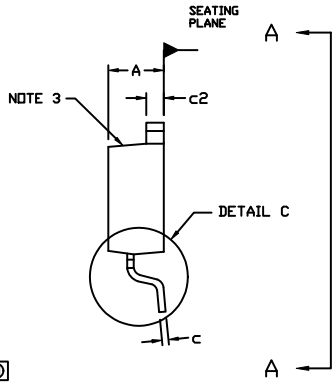

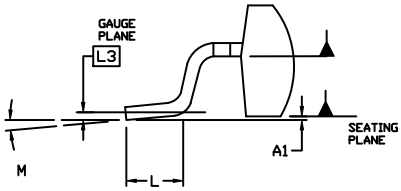

DETAIL C
TIP LEADFORM
ROTATED 90° CW

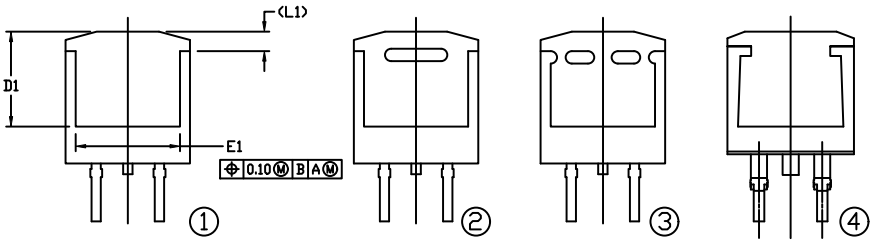

VIEW A–A

VIEW A–A
OPTIONAL CONSTRUCTIONS

GENERIC MARKING DIAGRAMS*

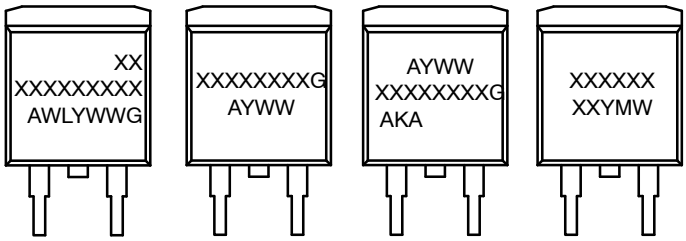

IC | Standard | Rectifier | SSG

XXXXXX = Specific Device Code
A = Assembly Location
WL = Wafer Lot
Y = Year
WW = Work Week
W = Week Code (SSG)
M = Month Code (SSG)
G = Pb–Free Package
AKA = Polarity Indicator

*This information is generic. Please refer to device data sheet for actual part marking. Pb–Free indicator, "G" or microdot " ▪", may or may not be present. Some products may not follow the Generic Marking.

DOCUMENT NUMBER:	98AON56370E	Electronic versions are uncontrolled except when accessed directly from the Document Repository. Printed versions are uncontrolled except when stamped "CONTROLLED COPY" in red.
DESCRIPTION:	D²PAK–3 (TO–263, 3–LEAD)	PAGE 1 OF 1

onsemi and ON Semi are trademarks of Semiconductor Components Industries, LLC dba **onsemi** or its subsidiaries in the United States and/or other countries. **onsemi** reserves the right to make changes without further notice to any products herein. **onsemi** makes no warranty, representation or guarantee regarding the suitability of its products for any particular purpose, nor does **onsemi** assume any liability arising out of the application or use of any product or circuit, and specifically disclaims any and all liability, including without limitation special, consequential or incidental damages. **onsemi** does not convey any license under its patent rights nor the rights of others.

Downloaded from Arrow.com.

onsemi, onsemi, and other names, marks, and brands are registered and/or common law trademarks of Semiconductor Components Industries, LLC dba "**onsemi**" or its affiliates and/or subsidiaries in the United States and/or other countries. **onsemi** owns the rights to a number of patents, trademarks, copyrights, trade secrets, and other intellectual property. A listing of **onsemi**'s product/patent coverage may be accessed at www.onsemi.com/site/pdf/Patent−Marking.pdf. **onsemi** reserves the right to make changes at any time to any products or information herein, without notice. The information herein is provided "as−is" and **onsemi** makes no warranty, representation or guarantee regarding the accuracy of the information, product features, availability, functionality, or suitability of its products for any particular purpose, nor does **onsemi** assume any liability arising out of the application or use of any product or circuit, and specifically disclaims any and all liability, including without limitation special, consequential or incidental damages. Buyer is responsible for its products and applications using **onsemi** products, including compliance with all laws, regulations and safety requirements or standards, regardless of any support or applications information provided by **onsemi**. "Typical" parameters which may be provided in **onsemi** data sheets and/or specifications can and do vary in different applications and actual performance may vary over time. All operating parameters, including "Typicals" must be validated for each customer application by customer's technical experts. **onsemi** does not convey any license under any of its intellectual property rights nor the rights of others. **onsemi** products are not designed, intended, or authorized for use as a critical component in life support systems or any FDA Class 3 medical devices or medical devices with a same or similar classification in a foreign jurisdiction or any devices intended for implantation in the human body. Should Buyer purchase or use **onsemi** products for any such unintended or unauthorized application, Buyer shall indemnify and hold **onsemi** and its officers, employees, subsidiaries, affiliates, and distributors harmless against all claims, costs, damages, and expenses, and reasonable attorney fees arising out of, directly or indirectly, any claim of personal injury or death associated with such unintended or unauthorized use, even if such claim alleges that **onsemi** was negligent regarding the design or manufacture of the part. **onsemi** is an Equal Opportunity/Affirmative Action Employer. This literature is subject to all applicable copyright laws and is not for resale in any manner.

ADDITIONAL INFORMATION

TECHNICAL PUBLICATIONS:
Technical Library: www.onsemi.com/design/resources/technical−documentation
onsemi Website: www.onsemi.com

ONLINE SUPPORT: www.onsemi.com/support
For additional information, please contact your local Sales Representative at www.onsemi.com/support/sales

Downloaded from Arrow.com.